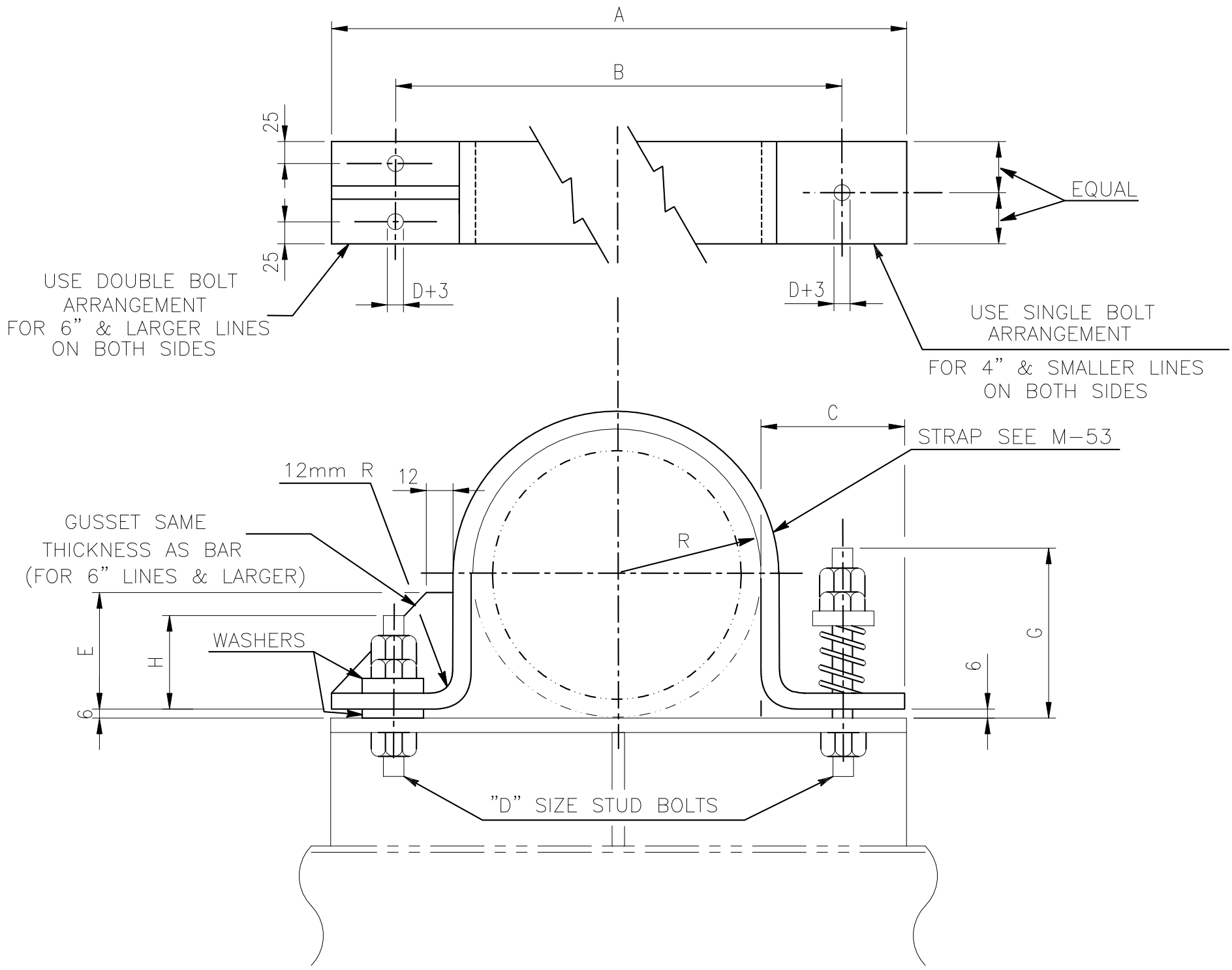

PIPE SIZE	A	B	C	E	R	BOLT DIA.	G	H	SPRING MARK NO. (FOR ENG. DATA SEE SH'T D-88A)	STEEL BAR SIZE
1"	186	127	76	–	17	1/4"	60	35	SPR02	65X 6
1 1/2"	202	143	76	–	25	1/4"	60	35	SPR02	65X 6
2"	244	171	92	–	30	3/8"	70	40	SPR03	75X 6
3"	272	197	92	–	44	3/8"	70	40	SPR03	75X 6
4"	298	222	92	–	57	3/8"	70	40	SPR03	75X 6
6"	396	305	114	71	84	1/2"	90	55	SPR04	125X 9
8"	448	356	114	97	110	1/2"	90	55	SPR04	125X 9
10"	502	406	114	124	137	3/4"	130	70	SPR05	125X 9
12"	552	464	114	143	162	3/4"	130	70	SPR05	150X12
14"	584	495	114	165	178	3/4"	130	70	SPR05	150X12
16"	634	546	114	191	203	3/4"	130	70	SPR05	150X12
18"	686	597	114	216	229	3/4"	130	70	SPR05	150X12
20"	736	648	114	241	254	7/8"	140	85	SPR06	150X12
24"	838	749	114	292	305	7/8"	140	85	SPR06	150X12

FILE: D-88M.DWG

中威工程顧問股份有限公司
CHUNG WEI ENGINEERING CONSULTING CO., LTD.

BY	SHIH		CHK.	YANG	
DATE	12/12/'19		APPR.	CHEN	

DETAIL OF PIPE SUPPORT
TYPE-73
(1 OF 2)

ENGINEERING STANDARD
E1906-DSP-500-006
D-88
REV. 0

ENGINEERING DATA OF SPRING COILS						
SPRING MARK NO.	DIA. OF WIRE (MM)	I.D. OF COIL (MM)	NO. OF ACTIVE COILS	NO. OF INACTIVE COILS	SPRING CONSTANT (KG/MM)	FREE LENGTH (MM)
SPR02	2	15	5	2	0.7	25
SPR03	3	19	4	2	1.9	30
SPR04	4	24	4	2	2.9	40
SPR05	5	34	3	2	3.5	55
SPR06	6	39	3	2	4.7	65

* MATERIAL OF SPRING COILS : ASTM A229 CLASS 1

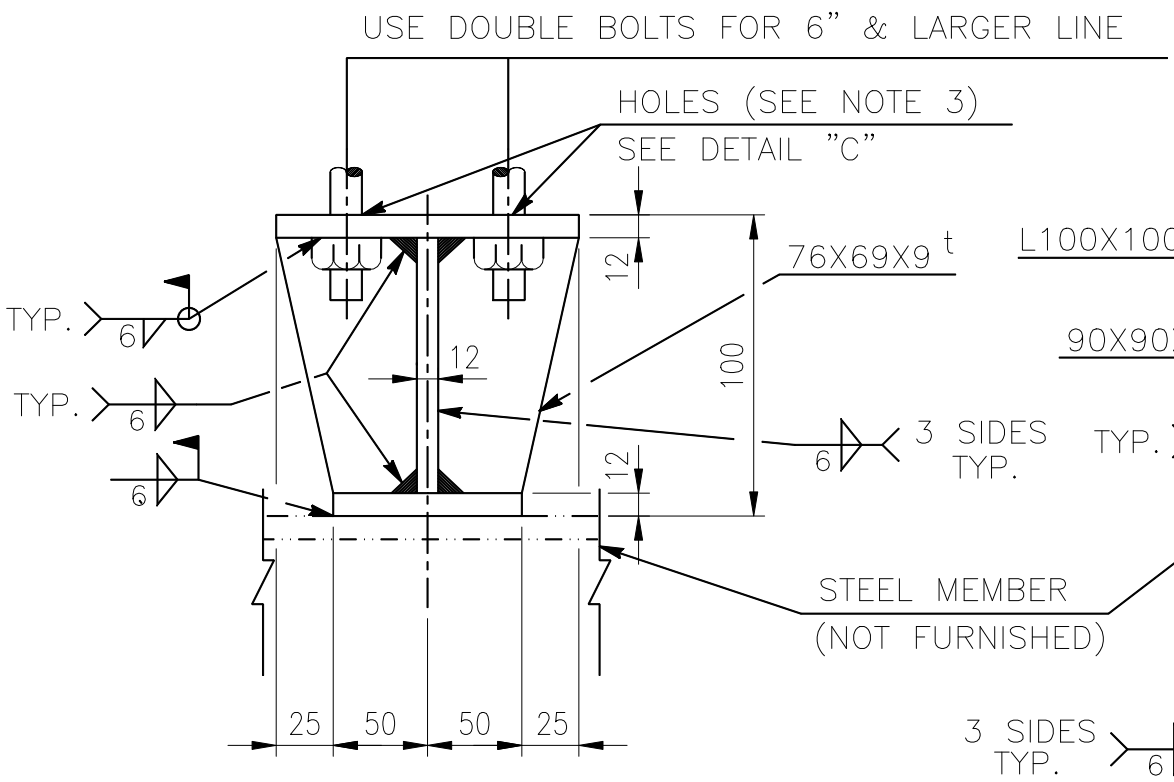

DETAIL "A"

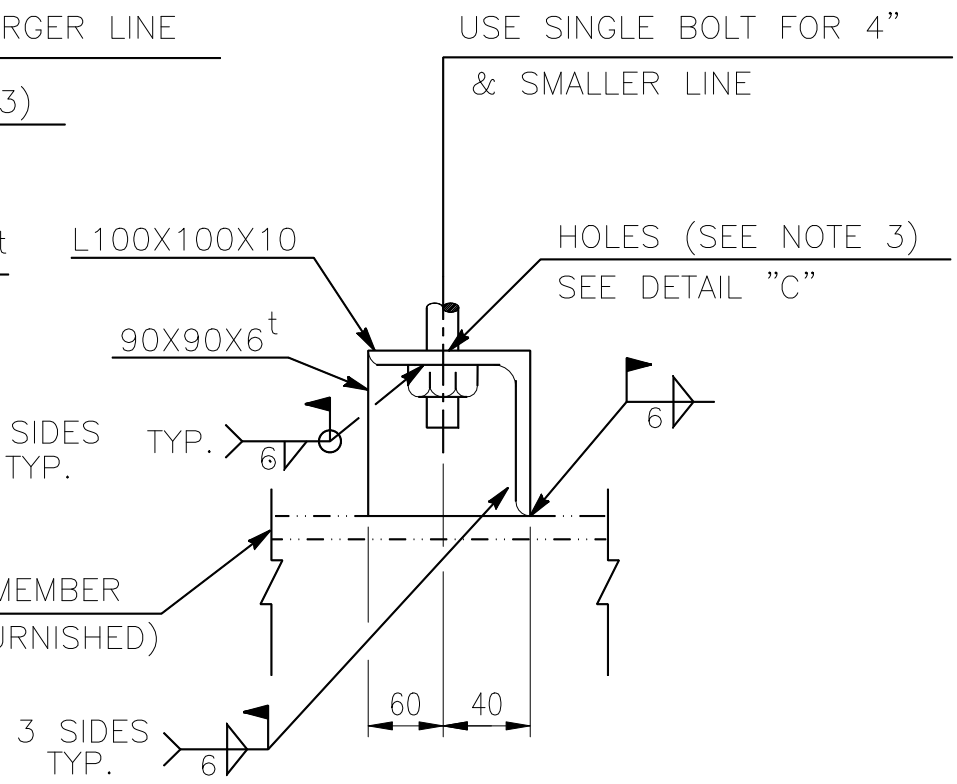

DETAIL "B"

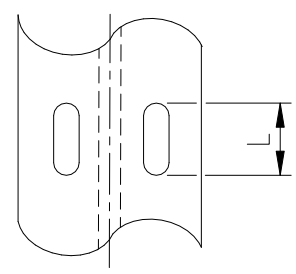

DETAIL "C"

NOTES :

1. DESIGNATION NUMBER DENOTE AS FOLLOW :

   73-1B-G
   - (S) DENOTE SLIDE SUPPORT
   - (G) DENOTE GUIDE SUPPORT
   - DENOTE LINE SIZE
   - DENOTE TYPE NO.

2. BASEPLATES CAN BE CONTINUOUS WHERE HOLDDOWNS ARE ADJACENT TO ONE ANOTHER.

3. L = D+3, USE FOR GUIDE SUP'T
   = 2D, USE FOR SLIDE SUP'T

中威工程顧問股份有限公司 CHUNG WEI ENGINEERING CONSULTING CO., LTD.						DETAIL OF PIPE SUPPORT TYPE-73 (2 OF 2)	ENGINEERING STANDARD E1906-DSP-500-006	
BY	SHIH		CHK.	YANG			D-88A	REV. 0
DATE	12/12/'19		APPR.	CHEN				

FILE: D-88MA.DWG