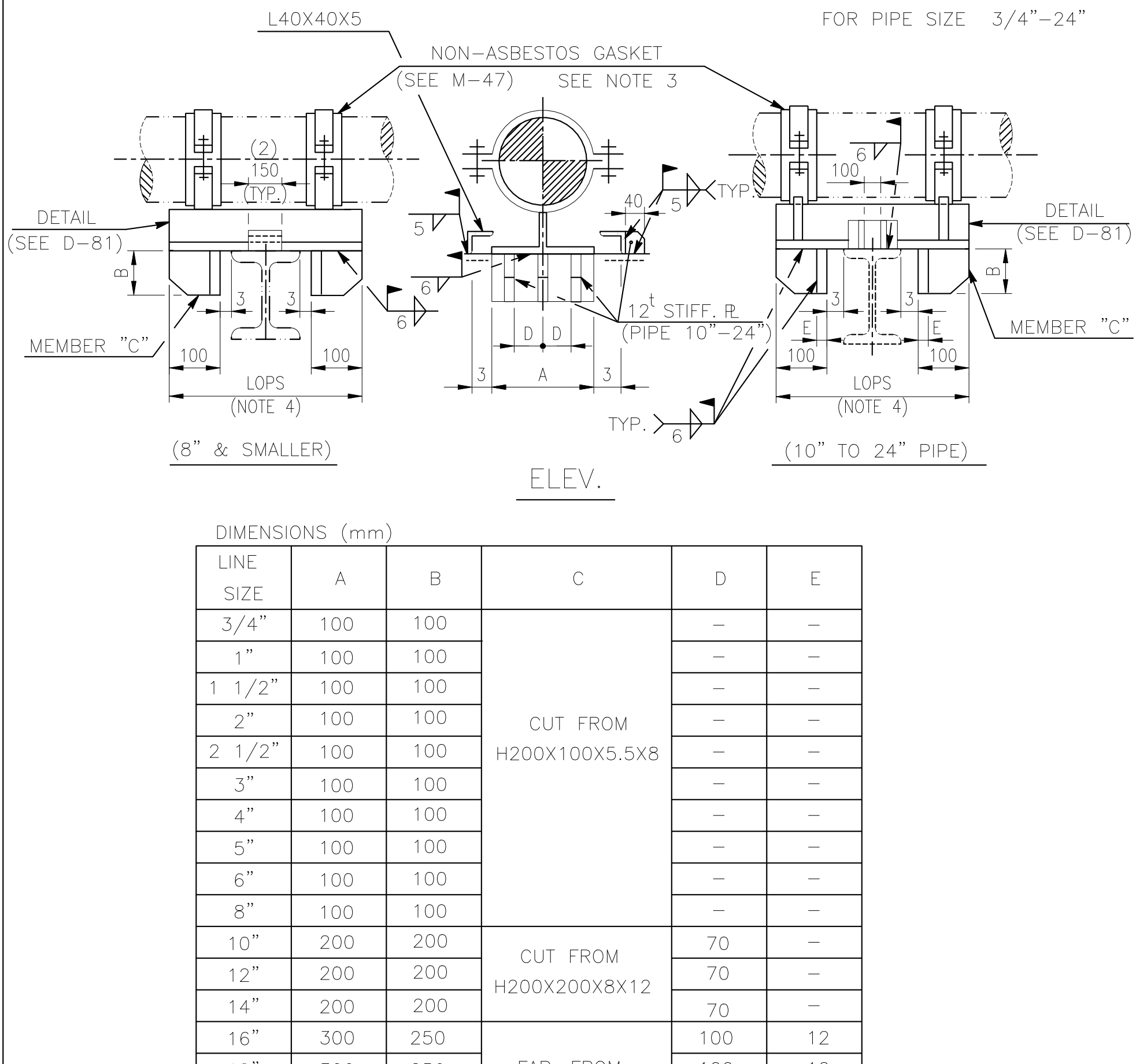

DIMENSIONS (mm)

LINE SIZE	A	B	C	D	E
3/4"	100	100	CUT FROM H200X100X5.5X8	–	–
1"	100	100		–	–
1 1/2"	100	100		–	–
2"	100	100		–	–
2 1/2"	100	100		–	–
3"	100	100		–	–
4"	100	100		–	–
5"	100	100		–	–
6"	100	100		–	–
8"	100	100		–	–
10"	200	200	CUT FROM H200X200X8X12	70	–
12"	200	200		70	–
14"	200	200		70	–
16"	300	250	FAB. FROM 12t PL	100	12
18"	300	250		100	12
20"	300	250		100	12
24"	350	250		100	12

NOTES :

1. DESIGNATION NUMBER DENOTE AS FOLLOWS :

84-2B-A-130-500

- 84 — DENOTE TYPE NO.
- 2B — DENOTE LINE SIZE
- A — SEE SH'T D-80A TABLE "A"
- 130 — MODIFY HOPS=130 (IN mm) IF ANY
- 500 — MODIFY LOPS=500 (IN mm) IF ANY

2. THE MAX. LENGTH OF THIS MEMBER SHALL NOT EXCEED THE WIDTH OF BEAM.
3. THIS TYPE IS USUALLY USED FOR ALLOY STEEL AND STAINLESS STEEL LINES (MAX. LINE TEMP. : 750°F)
4. PIPE SHOE LENGTH (SAY LOPS) TO SUIT BEAM WIDTH IN FIELD.
5. HOPS=HEIGHT OF PIPE SHOE, LOPS=LENGTH OF PIPE SHOE.

FILE: D-103M.DWG

中威工程顧問股份有限公司 CHUNG WEI ENGINEERING CONSULTING CO., LTD.						DETAIL OF PIPE SUPPORT TYPE-84 (1 OF 2)	ENGINEERING STANDARD E1906-DSP-500-006	
BY	SHIH		CHK.	YANG			D-103	REV. 0
DATE	12/12/'19		APPR.	CHEN				

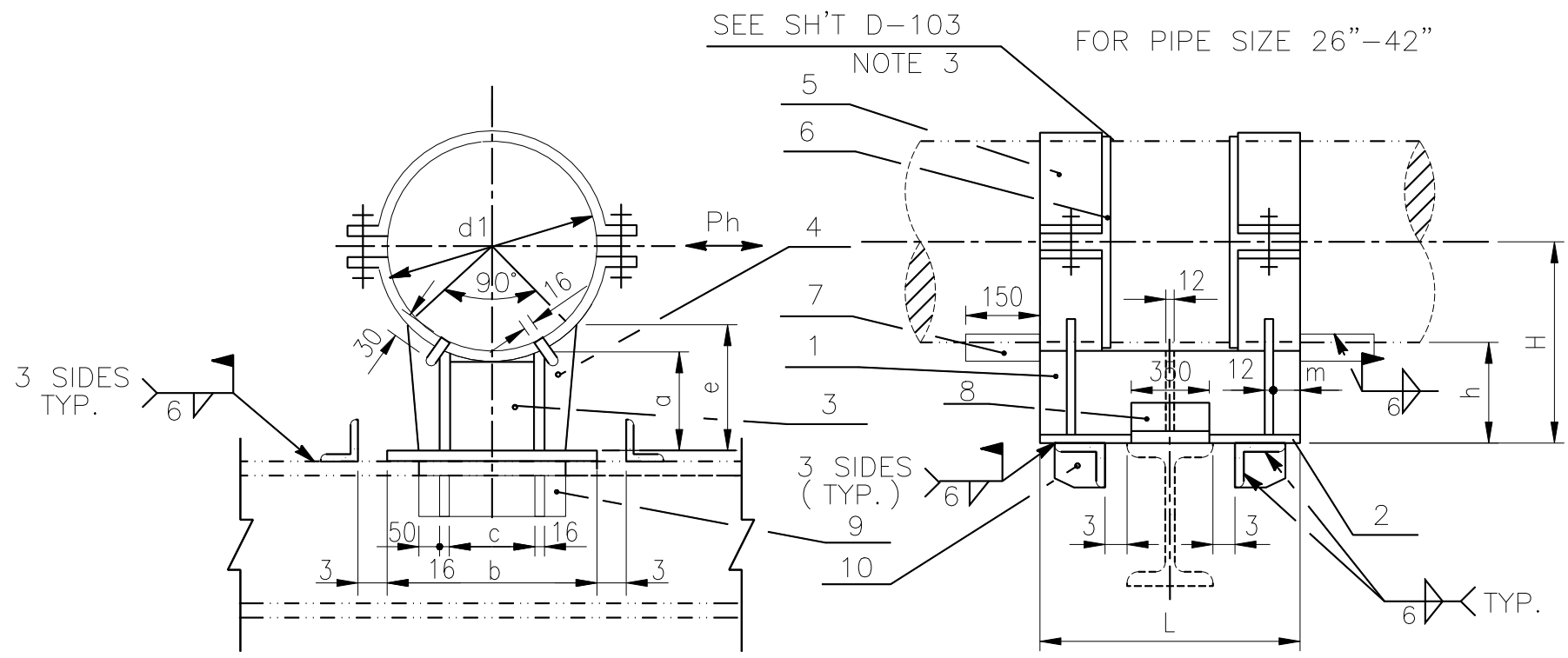

ELEV.

DIMENSIONS (mm)

NO.	7	8	9	10
PIECE	4	2	2	6
PIPE SIZE	(NOTE 4) STOP PIECE	GUIDE	STOP ANGLE	PLATE
26"	PLATE 16 TH'K	L50X50X6	L100X100X10	6 TH'K
28"				
30"				
32"				
36"				
40"				
42"				

NOTES :

1. FOR DIMENSIONS AND INFORMATION NOT SHOWN ON THIS DWG., SEE SH'T D-81A.

2. DESIGNATION NUMBER DENOTE AS FOLLOWS :

84-30B-A(A)-130-500

- DENOTE TYPE NO.
- DENOTE LINE SIZE
- SEE NOTE 3
- SEE SH'T D-80A TABLE "B"
- MODIFY HOPS=130 (IN mm) IF ANY
- MODIFY LOPS=500 (IN mm) IF ANY

3. TYPE-A FOR INSULATION THICKNESS < 100
   TYPE-B FOR INSULATION THICKNESS > 100 < 150

4. MATERIAL FOR STOP PIECES ACCORDING TO PIPE MATERIAL.

5. LOADING CONDITION: CARBON STEEL SADDLE WITH MAX. PIPE TEMPERATURE 700?F.

6. HOPS=HEIGHT OF PIPE SHOE, LOPS=LENGTH OF PIPE SHOE.

中威工程顧問股份有限公司 CHUNG WEI ENGINEERING CONSULTING CO., LTD.						DETAIL OF PIPE SUPPORT TYPE-84 (2 OF 2)	ENGINEERING STANDARD E1906-DSP-500-006	
BY	SHIH		CHK.	YANG			D-104	REV. 0
DATE	12/12/'19		APPR.	CHEN				

FILE: D-104M.DWG