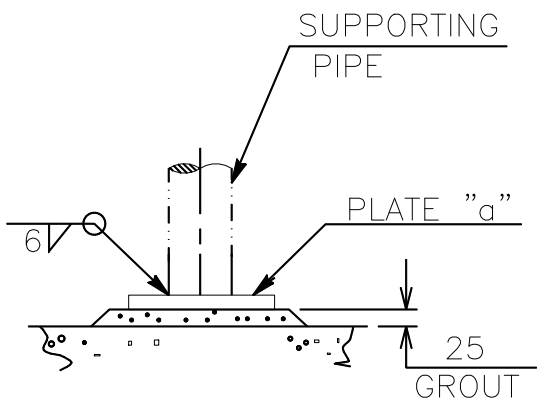


TYPE-A

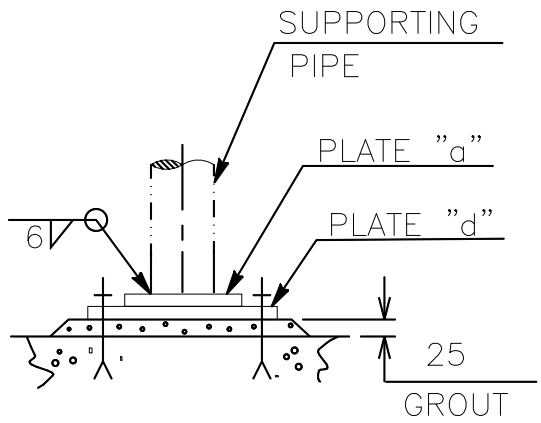


TYPE-B

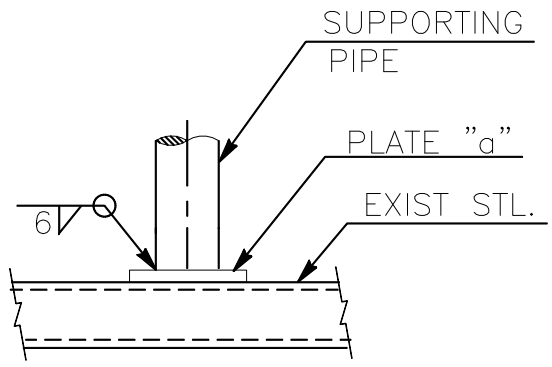


TYPE-C

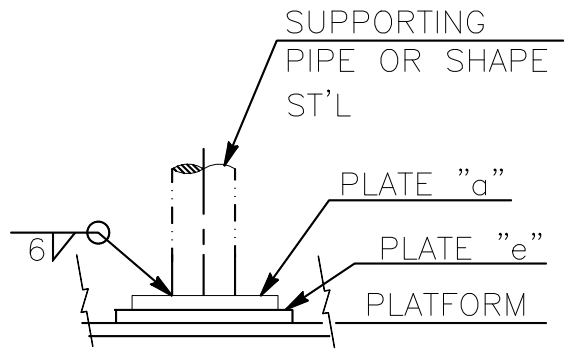


TYPE-D

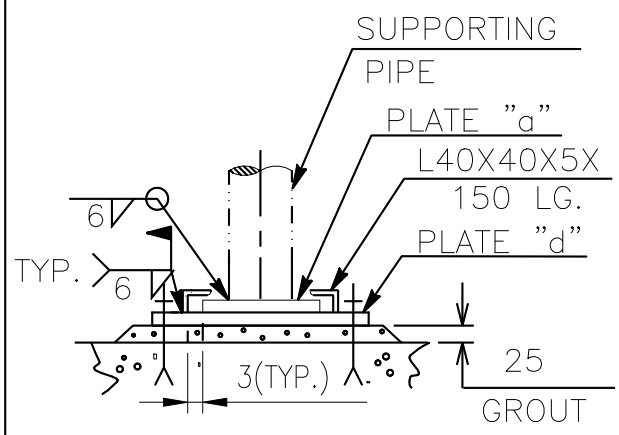


TYPE-E

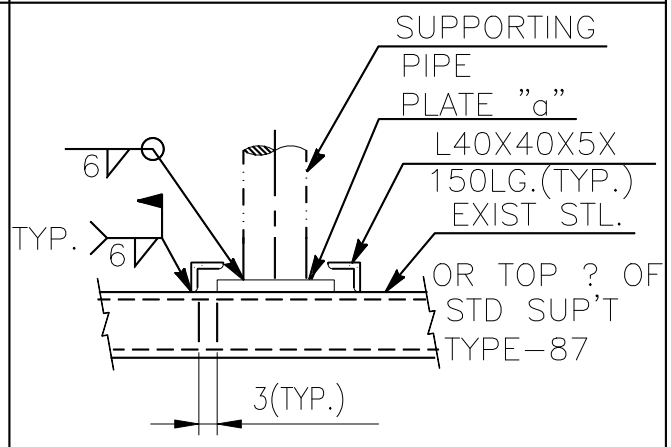


TYPE-F

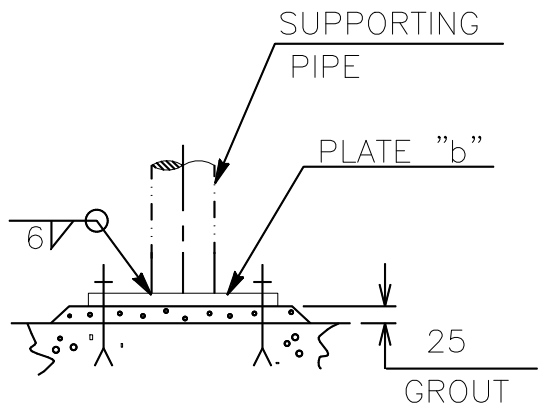


TYPE-G

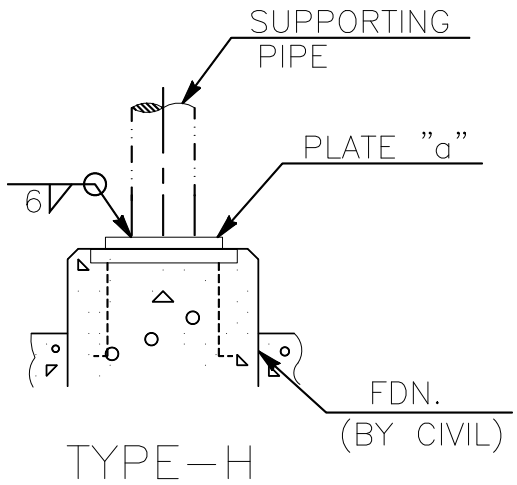


TYPE-H

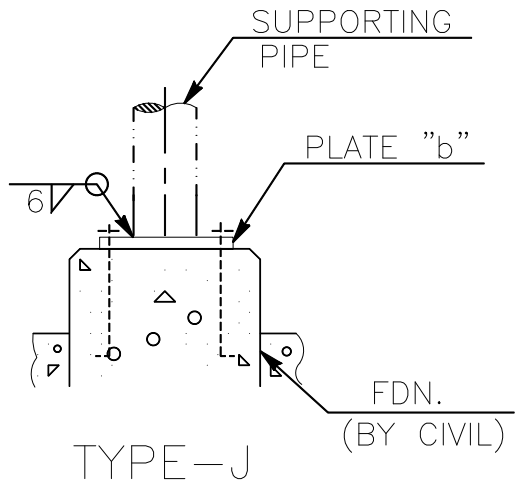


TYPE-J

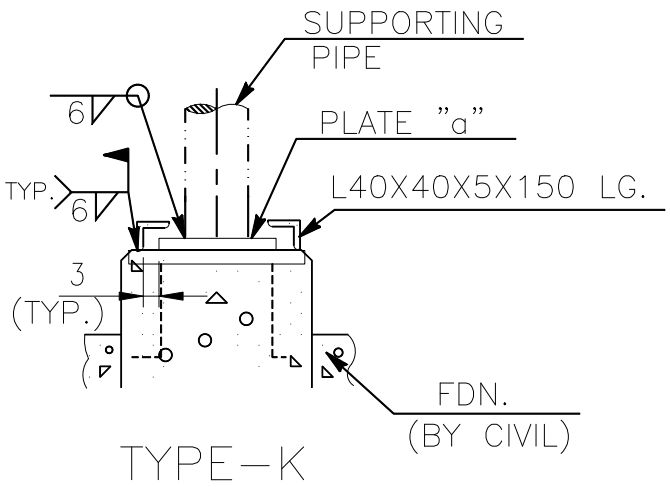


TYPE-K

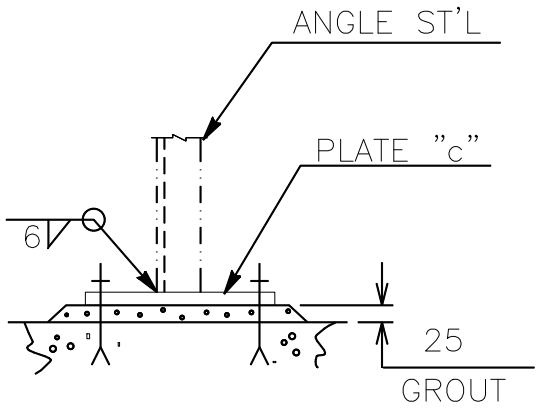


TYPE-L

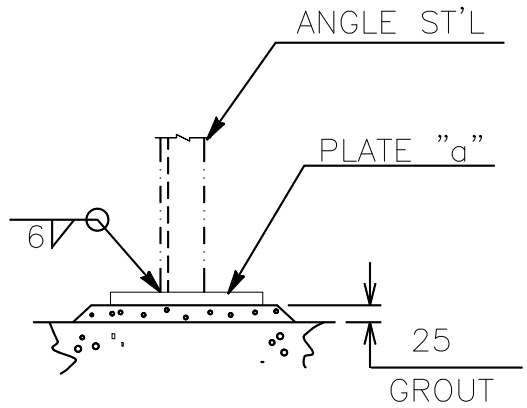


TYPE-M

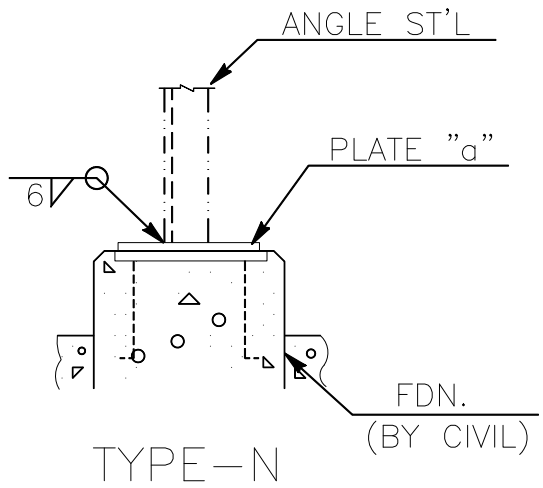


TYPE-N

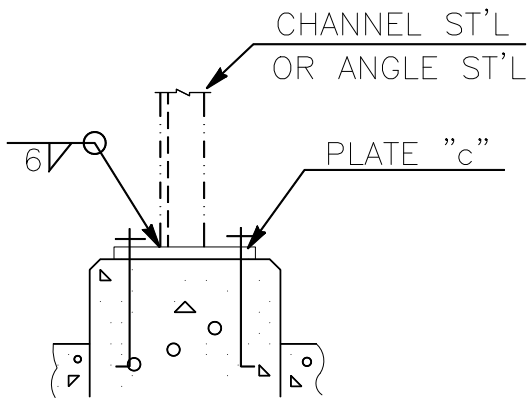


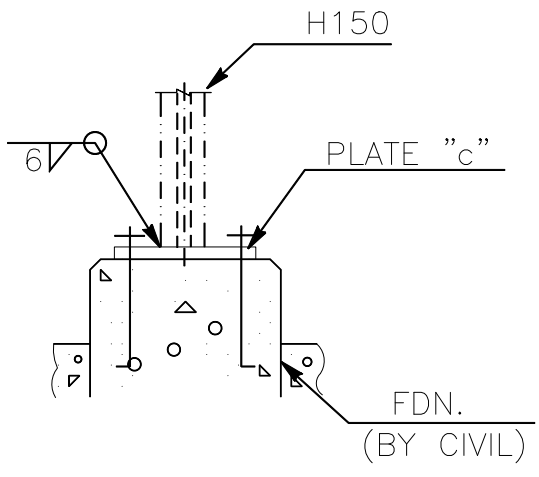


TYPE-P

| | | | | | |
|---|---|---|---|---|---|
| 中威工程顧問股份有限公司<br>CHUNG WEI ENGINEERING CONSULTING CO., LTD. | | | | | |
| BY | SHIH | | CHK. | YANG | |
| DATE | 12/12/'19 | | APPR. | CHEN | |

LOWER COMPONENT OF BASE SUPPORT

(1 OF 3)

ENGINEERING STANDARD

E1906-DSP-500-006

M-42

REV. 0

FILE: M-42M.DWG

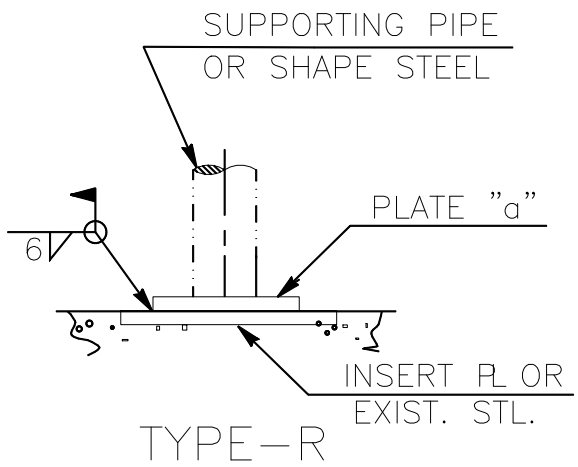


TYPE-R

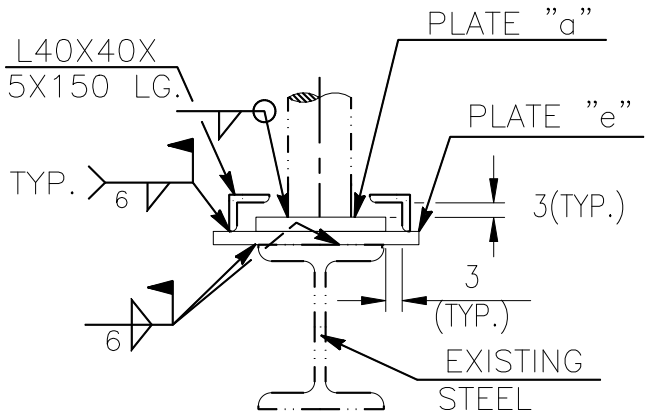


TYPE-S

| | | | | | |
|---|---|---|---|---|---|
| 中威工程顧問股份有限公司<br>CHUNG WEI ENGINEERING CONSULTING CO., LTD. | | | | | |
| BY | SHIH | | CHK. | YANG | |
| DATE | 12/12/'19 | | APPR. | CHEN | |

LOWER COMPONENT OF
BASE SUPPORT
(2 OF 3)

ENGINEERING STANDARD

E1906-DSP-500-006

M-42A

REV. 0

FILE: M-42MA.DWG

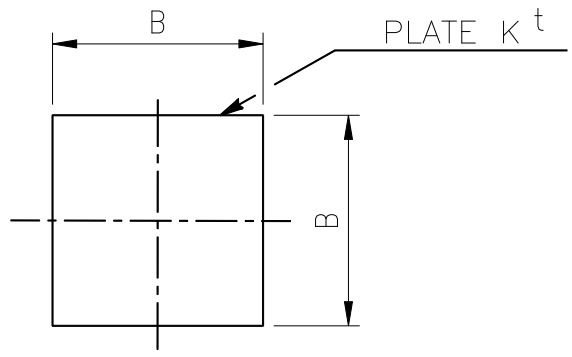


PLATE "a"

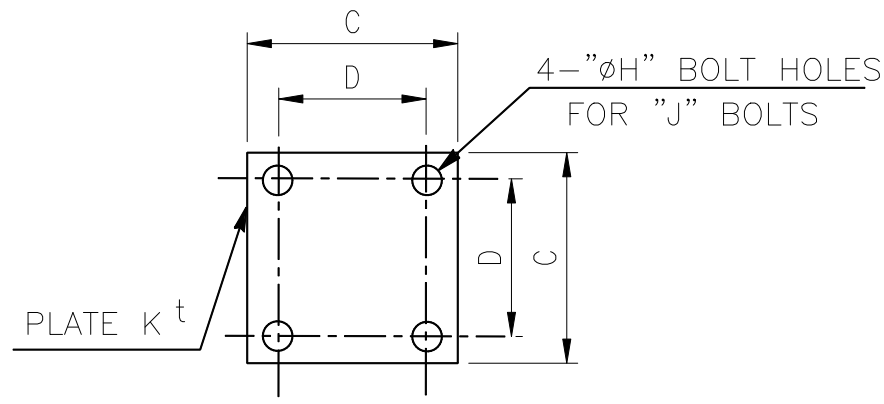


PLATE "b"

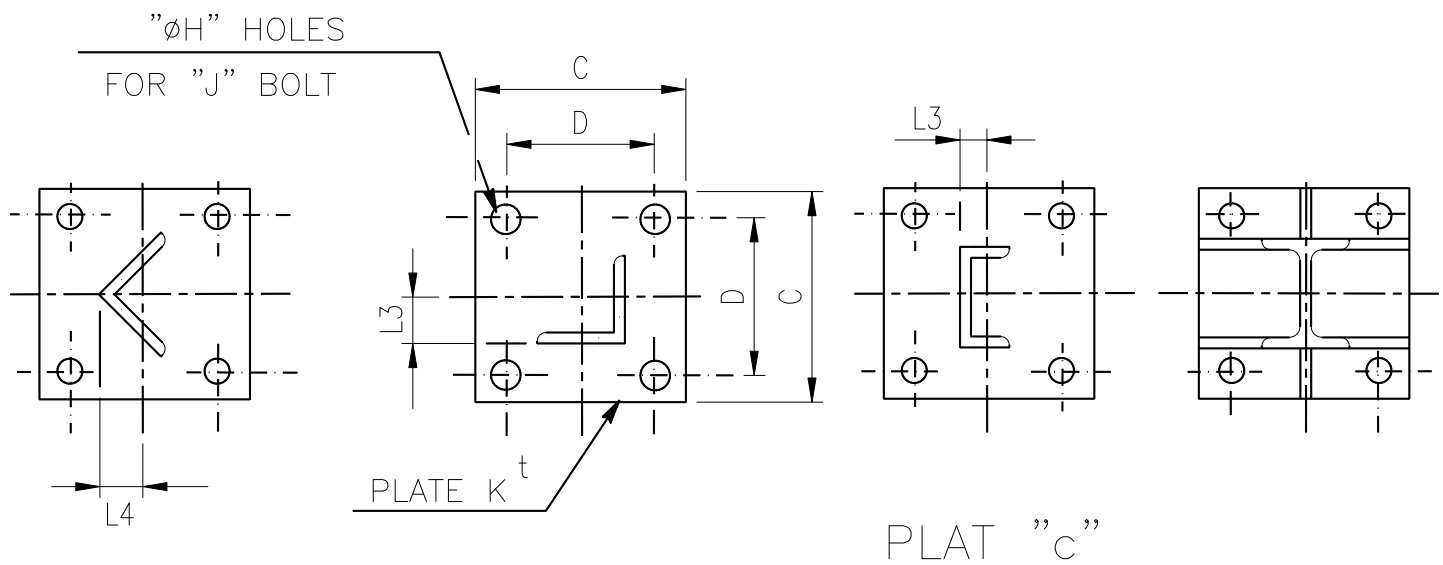


PLAT "c"

| SUP'TING STEEL | L3 | L4 |
|---|---|---|
| L50 | 25 | 15 |
| L65 | 30 | 20 |
| L75 | 35 | 25 |
| L100 | 50 | – |
| L150 | 75 | – |
| C125 | 30 | – |
| C150 | 30 | – |

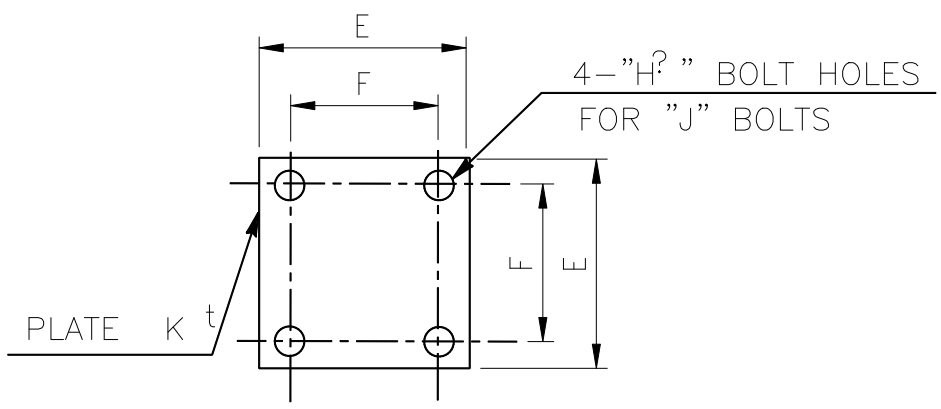


PLATE "d"

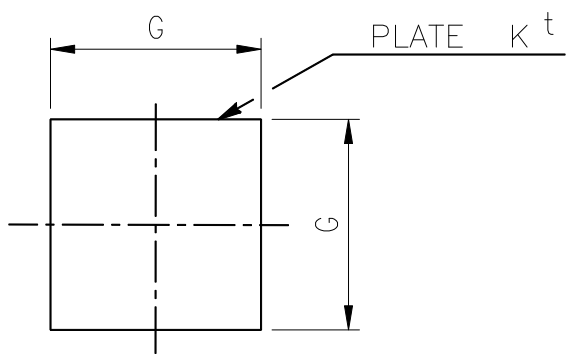


PLATE "e"

| SUPPORTING PIPE | SUPPORTING STEEL | B | C | D | E | F | G | EXP. BOLT H | EXP. BOLT J | K |
|---|---|---|---|---|---|---|---|---|---|---|
| 1"~3" | L50,L65 | 150 | 180 | 110 | 290 | 220 | 200 | 19 | 5/8" | 9 |
| 4"~6" | L75,L100 | 230 | 260 | 190 | 370 | 300 | 280 | 19 | 5/8" | 9 |
| 8" | C125 | 330 | 380 | 300 | 490 | 410 | 380 | 22 | 3/4" | 16 |
| 10" | C150 | 330 | 380 | 300 | 490 | 410 | 380 | 22 | 3/4" | 16 |
| 12" | H150 | 380 | 500 | 410 | 560 | 470 | 430 | 26 | 7/8" | 16 |
| 18" | – | 540 | 680 | 590 | 680 | 590 | 680 | 26 | 7/8" | 16 |
| 24" | – | 690 | 830 | 740 | 830 | 740 | 830 | 26 | 7/8" | 16 |

NOTES :

1. IF TYPE-B AND TYPE-H USED FOR SUPPORT TYPE-09. PLATE "a" SHALL BE DELETED.
2. GRATING SHALL BE CUT FOR LOWER COMPONENT TYPE C,F,R AND S IF REQUIRED.

FILE: M-43M.DWG

中威工程顧問股份有限公司
CHUNG WEI ENGINEERING CONSULTING CO., LTD.

| BY | SHIH | | CHK. | YANG | |
|---|---|---|---|---|---|
| DATE | 12/12/'19 | | APPR. | CHEN | |

LOWER COMPONENT OF BASE SUPPORT
(3 OF 3)

ENGINEERING STANDARD
E1906-DSP-500-006
M-43
REV. 0