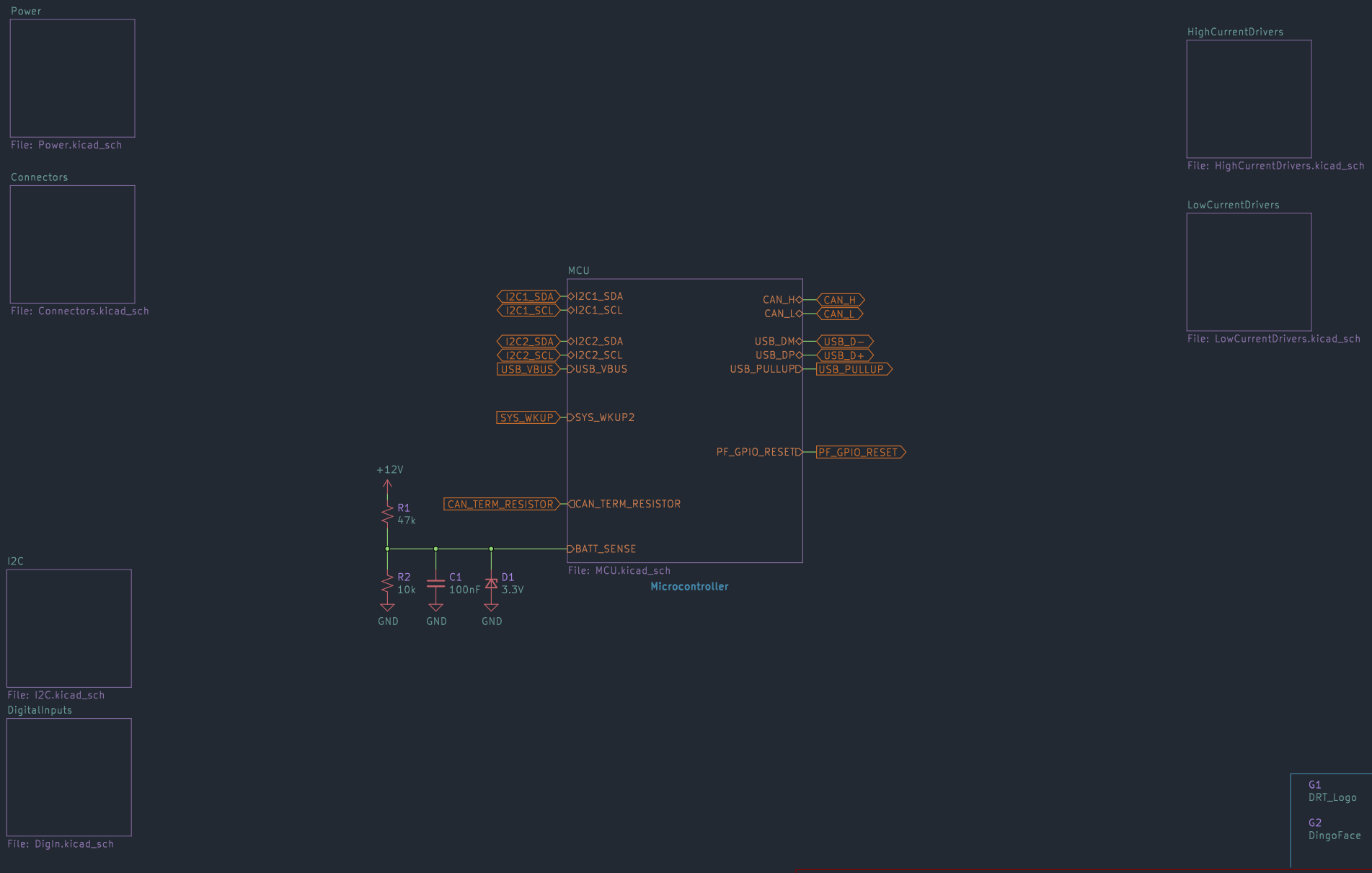

V5
−Changed ADS1015 to MAX11613EUA+T due to supply issues
−Changed PCB to match JLCPCB 2oz rules
−Changed ON_SW input to 12V switched
−Switched to TagConnect TC2030
−Changed pin positions of GND, IN1, IN2

Cory Grant
github.com/corygrant

Sheet:
File: DingoPDM.kicad_sch

Title: Dingo_PDM

Size: USLetter | Date: 2021-04-01	Rev: v5
KiCad E.D.A. kicad 7.0.1	Id: 1/16

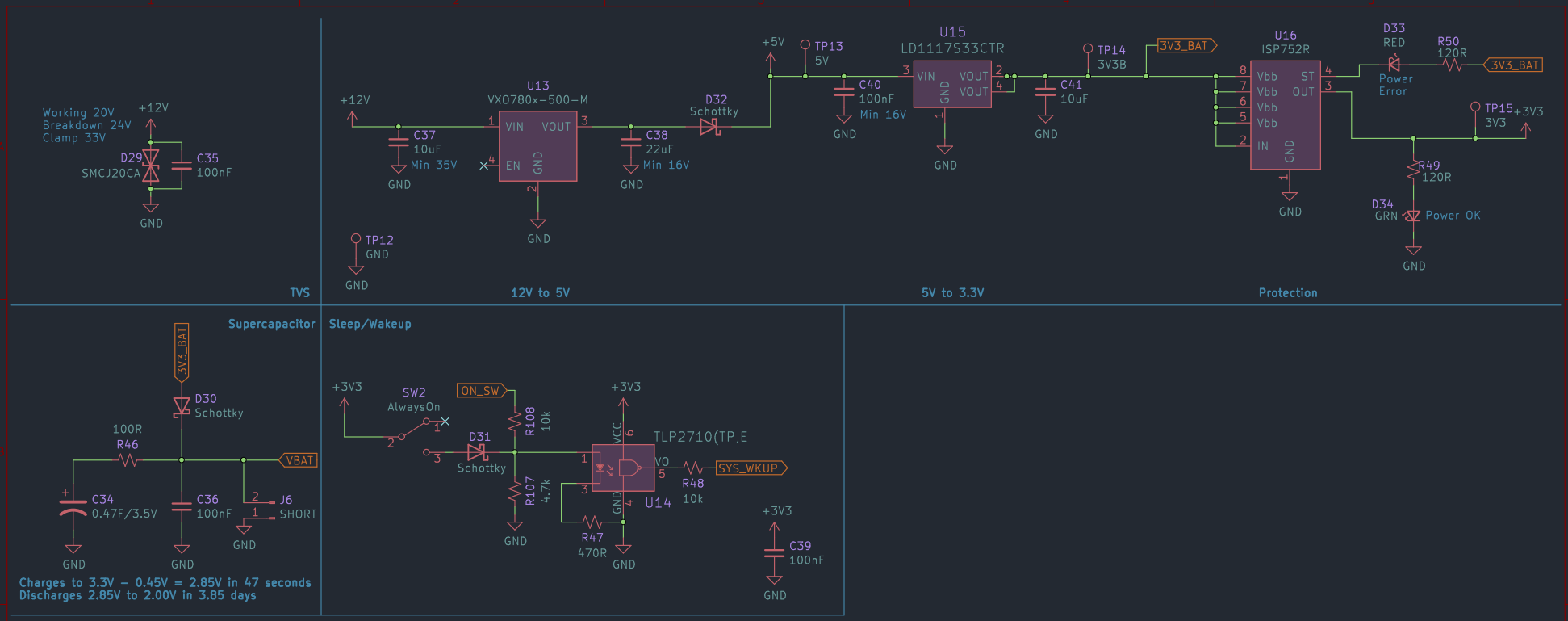

Cory Grant
github.com/corygrant

Sheet:
File: Power.kicad_sch

Title: Dingo_PDM

Size: USLetter | Date: 2021-04-01	Rev: v5
KiCad E.D.A. kicad 7.0.1	Id: 2/16

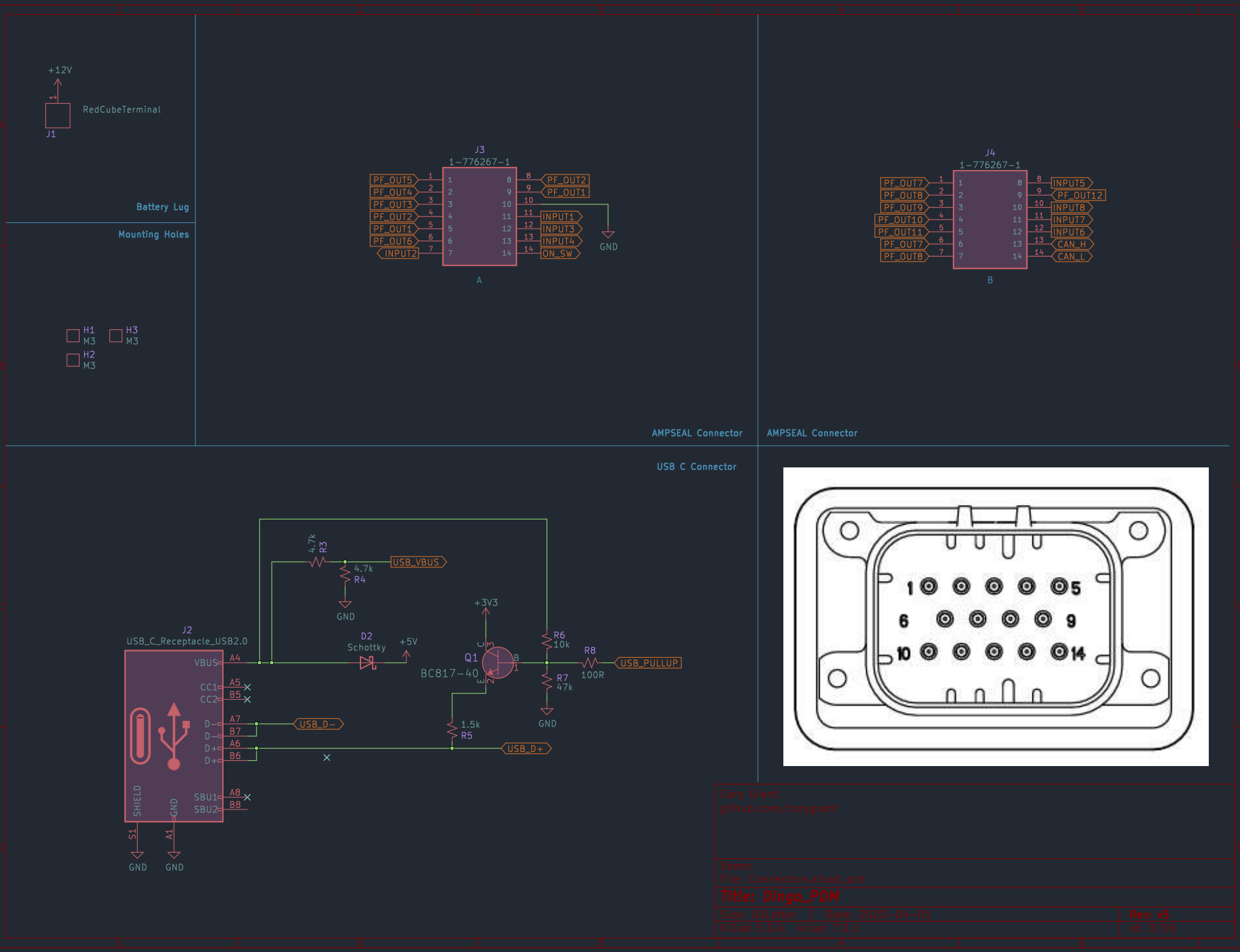
+12V
RedCubeTerminal
J1
Battery Lug
Mounting Holes
H1 M3
H3 M3
H2 M3
J3
1-776267-1
PF_OUT5
PF_OUT4
PF_OUT3
PF_OUT2
PF_OUT1
PF_OUT6
INPUT2
PF_OUT2
PF_OUT1
INPUT1
INPUT3
INPUT4
ON_SW
GND
A
AMPSEAL Connector
J4
1-776267-1
PF_OUT7
PF_OUT8
PF_OUT9
PF_OUT10
PF_OUT11
PF_OUT7
PF_OUT8
INPUT5
PF_OUT12
INPUT8
INPUT7
INPUT6
CAN_H
CAN_L
B
AMPSEAL Connector
USB C Connector
J2
USB_C_Receptacle_USB2.0
VBUS
CC1
CC2
D-
D-
D+
D+
SBU1
SBU2
SHIELD
GND
S1
A1
GND
GND
4.7k R3
4.7k R4
USB_VBUS
GND
D2 Schottky
+5V
+3V3
Q1 BC817-40
R6 10k
R8 100R
USB_PULLUP
R7 47k
GND
1.5k R5
USB_D-
USB_D+
Cory Grant
github.com/corygrant
Sheet:
File: Connectors.kicad_sch
Title: Dingo_PDM
Size: USLetter | Date: 2021-04-01
Rev: v5
KiCad E.D.A. kicad 7.0.1
Id: 3/16

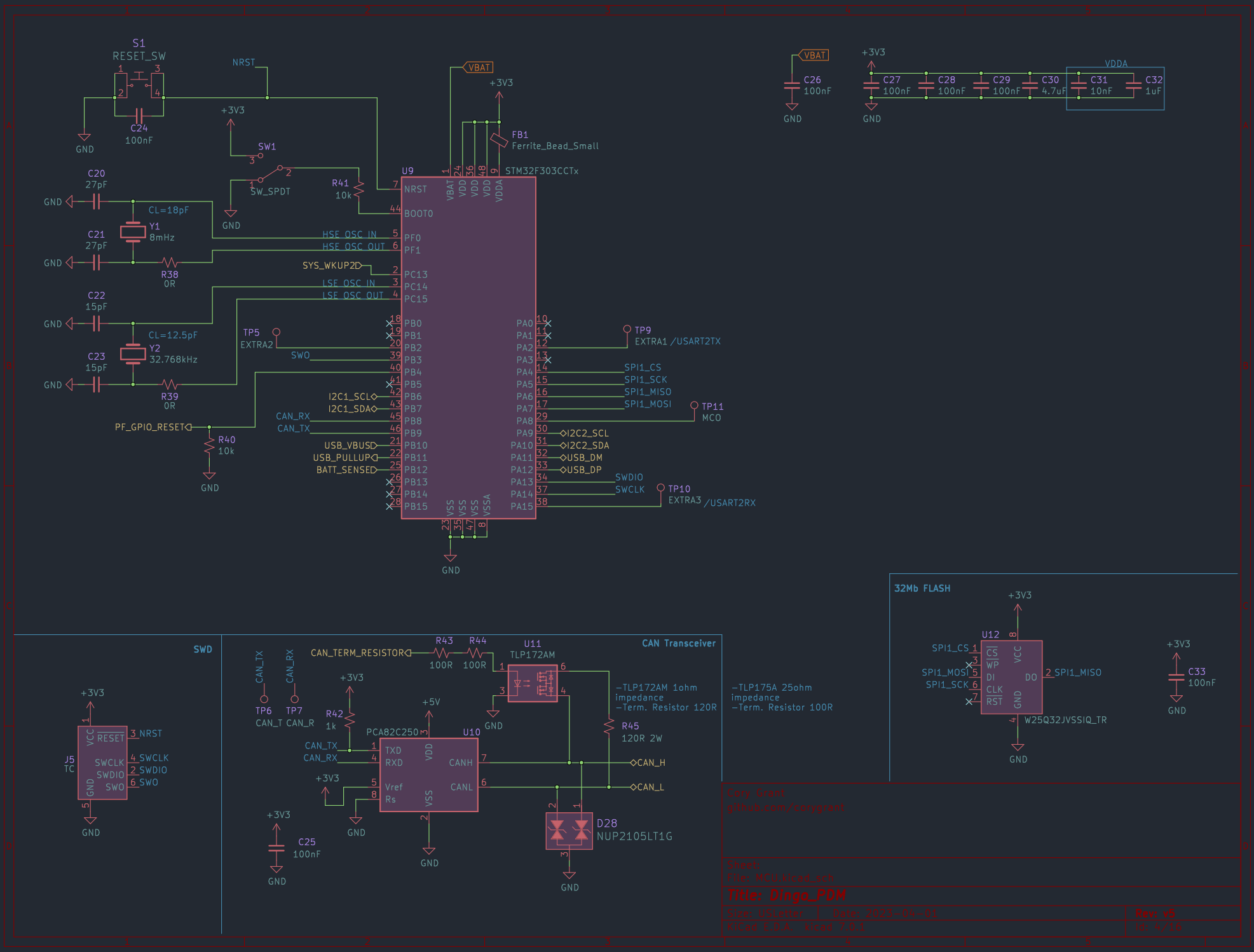
S1
RESET_SW
NRST
C24
100nF
GND
+3V3
SW1
SW_SPDT
R41
10k
VBAT
FB1
Ferrite_Bead_Small
U9
STM32F303CCTx
NRST
BOOT0
PF0
PF1
PC13
PC14
PC15
PB0
PB1
PB2
PB3
PB4
PB5
PB6
PB7
PB8
PB9
PB10
PB11
PB12
PB13
PB14
PB15
PA0
PA1
PA2
PA3
PA4
PA5
PA6
PA7
PA8
PA9
PA10
PA11
PA12
PA13
PA14
PA15
VBAT
VDD
VDD
VDD
VDDA
VSS
VSS
VSS
VSSA
C20
27pF
C21
27pF
CL=18pF
Y1
8mHz
R38
0R
C22
15pF
C23
15pF
CL=12.5pF
Y2
32.768kHz
R39
0R
HSE_OSC_IN
HSE_OSC_OUT
SYS_WKUP2
LSE_OSC_IN
LSE_OSC_OUT
TP5
EXTRA2
SWO
I2C1_SCL
I2C1_SDA
CAN_RX
CAN_TX
USB_VBUS
USB_PULLUP
BATT_SENSED
PF_GPIO_RESET
R40
10k
TP9
EXTRA1 /USART2TX
SPI1_CS
SPI1_SCK
SPI1_MISO
SPI1_MOSI
TP11
MCO
I2C2_SCL
I2C2_SDA
USB_DM
USB_DP
SWDIO
SWCLK
TP10
EXTRA3 /USART2RX
C26
100nF
C27
100nF
C28
100nF
C29
100nF
C30
4.7uF
C31
10nF
C32
1uF
VDDA
SWD
J5
TC
VCC
RESET
SWCLK
SWDIO
SWO
GND
NRST
SWCLK
SWDIO
SWO
CAN Transceiver
CAN_TERM_RESISTOR
R43
100R
R44
100R
U11
TLP172AM
TP6
CAN_T
TP7
CAN_R
R42
1k
PCA82C250
U10
TXD
RXD
Vref
Rs
VDD
VSS
CANH
CANL
CAN_TX
CAN_RX
+5V
R45
120R 2W
CAN_H
CAN_L
D28
NUP2105LT1G
C25
100nF
-TLP172AM 1ohm impedance
-Term. Resistor 120R
-TLP175A 25ohm impedance
-Term. Resistor 100R
32Mb FLASH
U12
CS
WP
DI
CLK
RST
VCC
DO
GND
SPI1_CS
SPI1_MOSI
SPI1_SCK
SPI1_MISO
W25Q32JVSSIQ_TR
C33
100nF
Cory Grant
github.com/corygrant
Sheet:
File: MCU.kicad_sch
Title: Dingo_PDM
Size: USLetter
Date: 2021-04-01
Rev: v5
KiCad E.D.A. kicad 7.0.1
Id: 4/16

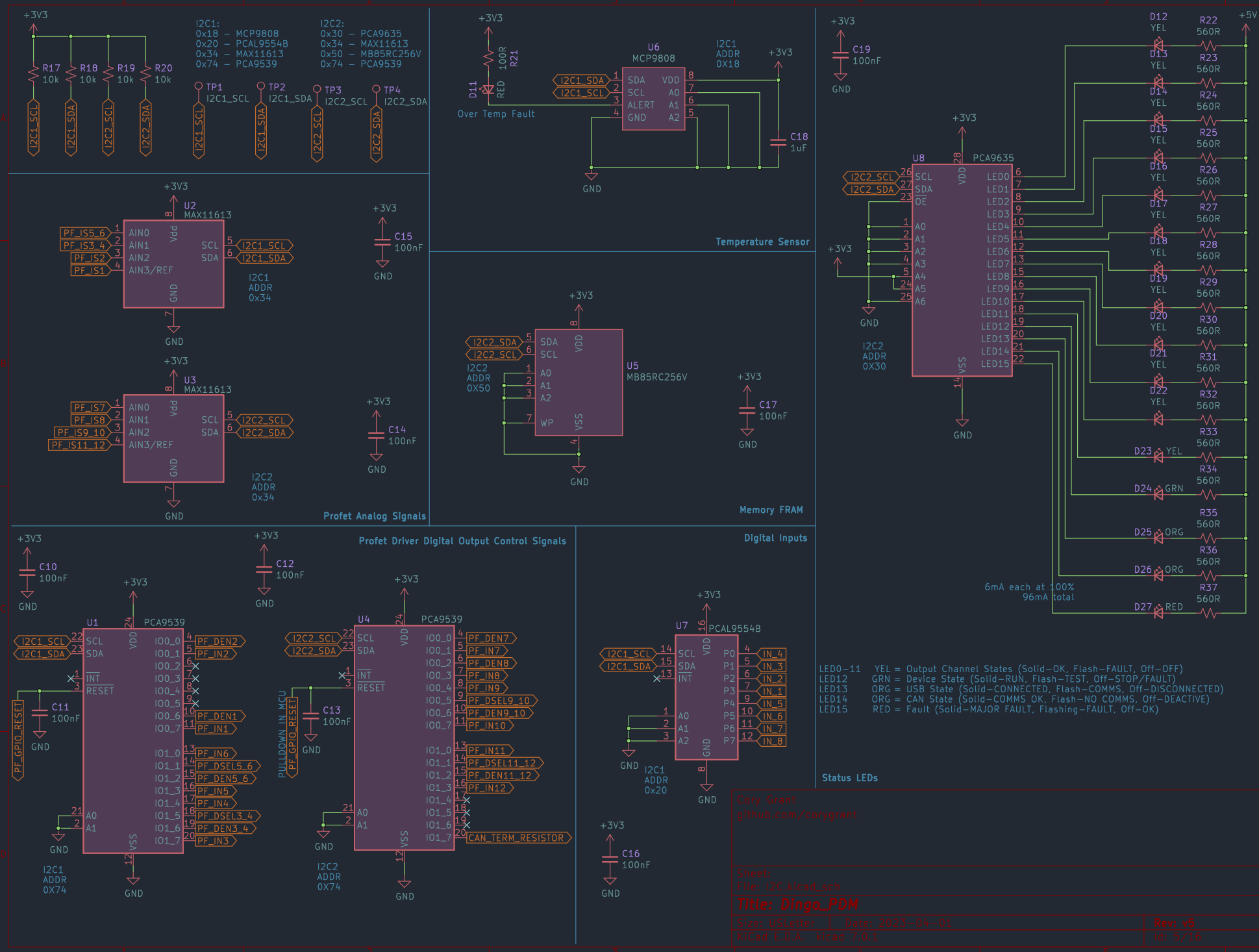
I2C1:
0x18 – MCP9808
0x20 – PCAL9554B
0x34 – MAX11613
0x74 – PCA9539
I2C2:
0x30 – PCA9635
0x34 – MAX11613
0x50 – MB85RC256V
0x74 – PCA9539
R17 10k
R18 10k
R19 10k
R20 10k
TP1 I2C1_SCL
TP2 I2C1_SDA
TP3 I2C2_SCL
TP4 I2C2_SDA
U6 MCP9808
I2C1 ADDR 0X18
D11 RED
R21 100R
Over Temp Fault
C18 1uF
Temperature Sensor
U2 MAX11613
I2C1 ADDR 0x34
C15 100nF
U3 MAX11613
I2C2 ADDR 0x34
C14 100nF
Profet Analog Signals
U5 MB85RC256V
I2C2 ADDR 0X50
C17 100nF
Memory FRAM
C19 100nF
U8 PCA9635
I2C2 ADDR 0X30
D12 YEL
D13 YEL
D14 YEL
D15 YEL
D16 YEL
D17 YEL
D18 YEL
D19 YEL
D20 YEL
D21 YEL
D22 YEL
D23 YEL
D24 GRN
D25 ORG
D26 ORG
D27 RED
R22 560R
R23 560R
R24 560R
R25 560R
R26 560R
R27 560R
R28 560R
R29 560R
R30 560R
R31 560R
R32 560R
R33 560R
R34 560R
R35 560R
R36 560R
R37 560R
6mA each at 100%
96mA total
LED0–11 YEL = Output Channel States (Solid–OK, Flash–FAULT, Off–OFF)
LED12 GRN = Device State (Solid–RUN, Flash–TEST, Off–STOP/FAULT)
LED13 ORG = USB State (Solid–CONNECTED, Flash–COMMS, Off–DISCONNECTED)
LED14 ORG = CAN State (Solid–COMMS OK, Flash–NO COMMS, Off–DEACTIVE)
LED15 RED = Fault (Solid–MAJOR FAULT, Flashing–FAULT, Off–OK)
Status LEDs
Profet Driver Digital Output Control Signals
C10 100nF
C12 100nF
U1 PCA9539
I2C1 ADDR 0X74
C11 100nF
PF_GPIO_RESET
PF_DEN2
PF_IN2
PF_DEN1
PF_IN1
PF_IN6
PF_DSEL5_6
PF_DEN5_6
PF_IN5
PF_IN4
PF_DSEL3_4
PF_DEN3_4
PF_IN3
U4 PCA9539
I2C2 ADDR 0X74
C13 100nF
PULLDOWN_IN_MCU
PF_GPIO_RESET
PF_DEN7
PF_IN7
PF_DEN8
PF_IN8
PF_IN9
PF_DSEL9_10
PF_DEN9_10
PF_IN10
PF_IN11
PF_DSEL11_12
PF_DEN11_12
PF_IN12
CAN_TERM_RESISTOR
Digital Inputs
U7 PCAL9554B
I2C1 ADDR 0x20
IN_4
IN_3
IN_2
IN_1
IN_5
IN_6
IN_7
IN_8
C16 100nF
Cory Grant
github.com/corygrant
Sheet:
File: I2C.kicad_sch
Title: Dingo_PDM
Size: USLetter
Date: 2021-04-01
Rev: v5
KiCad E.D.A. kicad 7.0.1
Id: 5/16

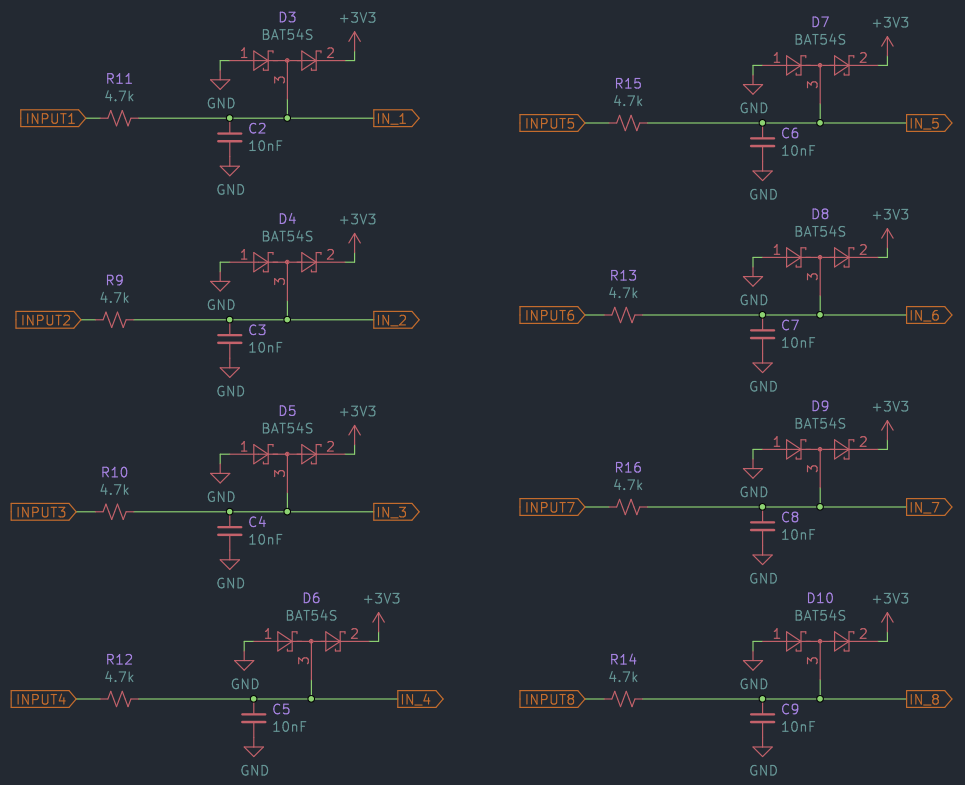

Cory Grant
github.com/corygrant

Sheet:
File: Digin.kicad_sch

Title: Dingo_PDM

Size: USLetter | Date: 2021-04-01	Rev: v5
KiCad E.D.A. kicad 7.0.1	Id: 6/16

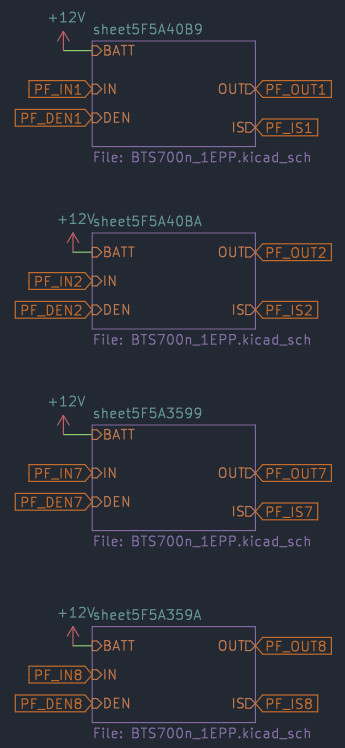

Cory Grant
github.com/corygrant

Sheet:
File: HighCurrentDrivers.kicad_sch

Title: Dingo_PDM

Size: USLetter | Date: 2021-04-01	Rev: v5
KiCad E.D.A. kicad 7.0.1	Id: 7/16

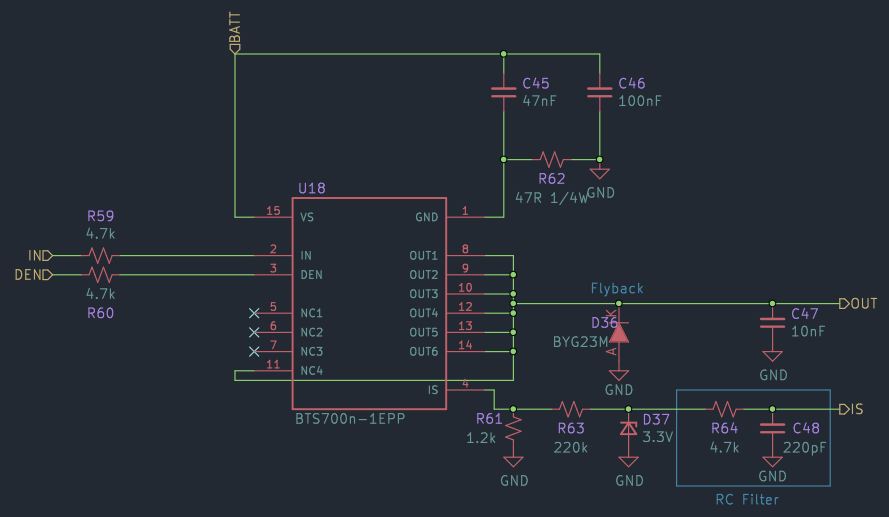

Cory Grant
github.com/corygrant

Sheet:
File: BTS700n_1EPP.kicad_sch

Title: Dingo_PDM

Size: USLetter | Date: 2021-04-01	Rev: v5
KiCad E.D.A. kicad 7.0.1	Id: 8/16

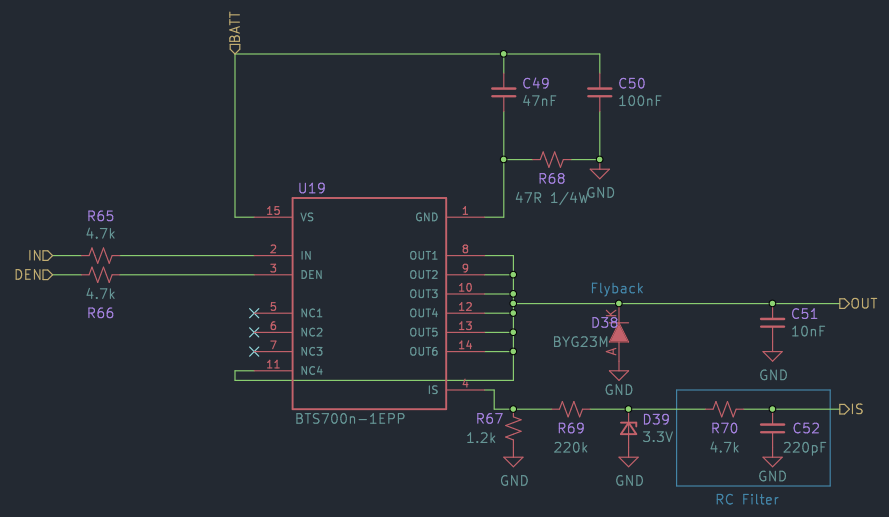

Cory Grant
github.com/corygrant

Sheet:
File: BTS700n_1EPP.kicad_sch

Title: Dingo_PDM

Size: USLetter | Date: 2021-04-01	Rev: v5
KiCad E.D.A. kicad 7.0.1	Id: 9/16

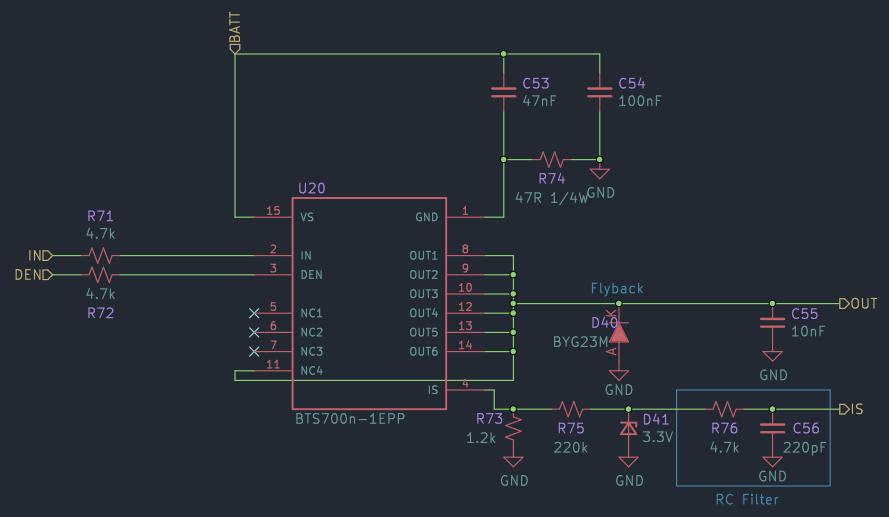

Cory Grant
github.com/corygrant

Sheet:
File: BTS700n_1EPP.kicad_sch

Title: Dingo_PDM

Size: USLetter | Date: 2021-04-01	Rev: v5
KiCad E.D.A. kicad 7.0.1	Id: 10/16

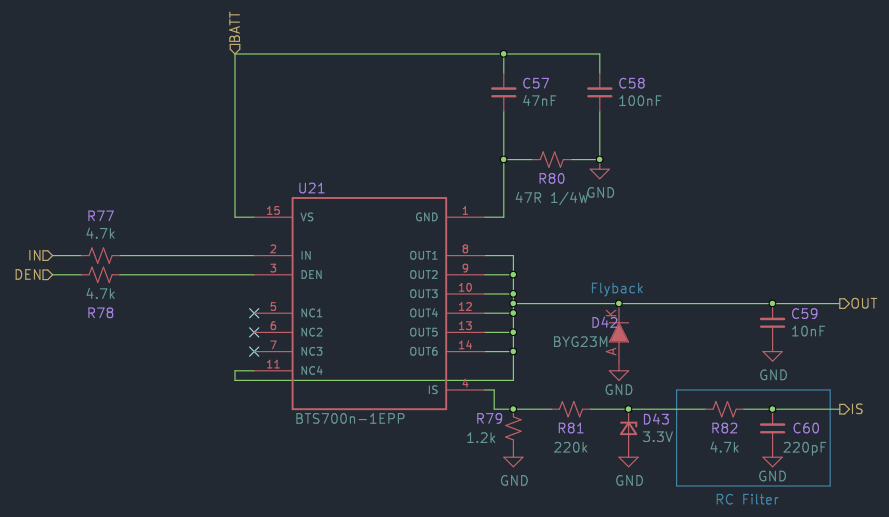

Cory Grant
github.com/corygrant

Sheet:
File: BTS700n_1EPP.kicad_sch

Title: Dingo_PDM

Size: USLetter | Date: 2021-04-01	Rev: v5
KiCad E.D.A. kicad 7.0.1	Id: 11/16

Cory Grant
github.com/corygrant

Sheet:
File: LowCurrentDrivers.kicad_sch

Title: Dingo_PDM

Size: USLetter | Date: 2021-04-01	Rev: v5
KiCad E.D.A. kicad 7.0.1	Id: 12/16

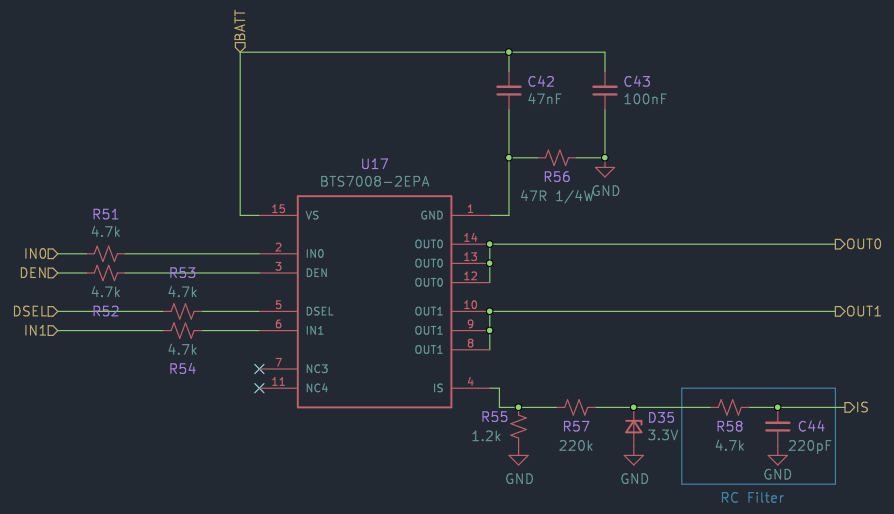

Cory Grant
github.com/corygrant

Sheet:
File: BTS7008_2EPA.kicad_sch

Title: Dingo_PDM

Size: USLetter | Date: 2021-04-01	Rev: v5
KiCad E.D.A. kicad 7.0.1	Id: 13/16

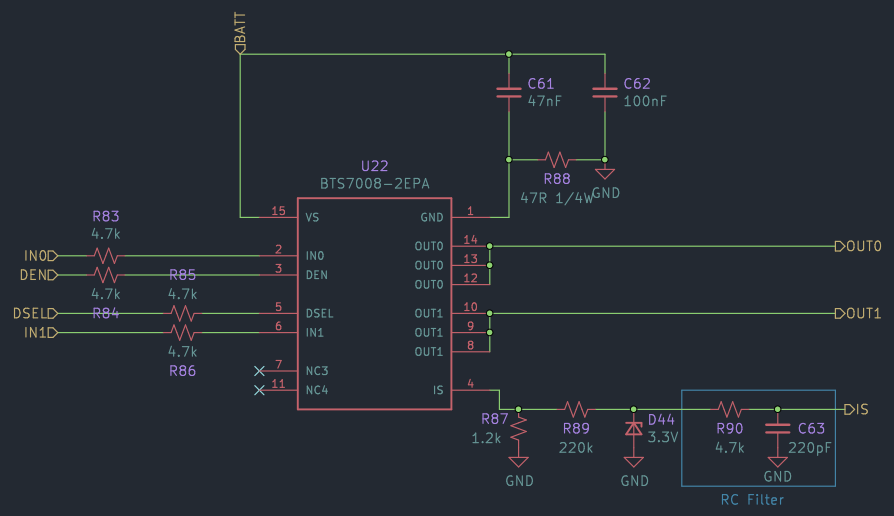

Cory Grant
github.com/corygrant

Sheet:
File: BTS7008_2EPA.kicad_sch

Title: Dingo_PDM

Size: USLetter | Date: 2021-04-01	Rev: v5
KiCad E.D.A. kicad 7.0.1	Id: 14/16

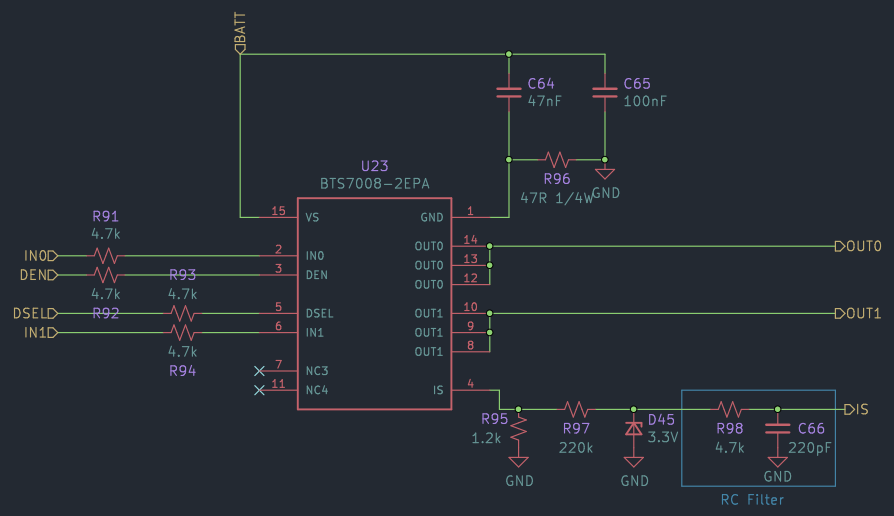

Cory Grant
github.com/corygrant

Sheet:
File: BTS7008_2EPA.kicad_sch

Title: Dingo_PDM

Size: USLetter | Date: 2021-04-01	Rev: v5
KiCad E.D.A. kicad 7.0.1	Id: 15/16

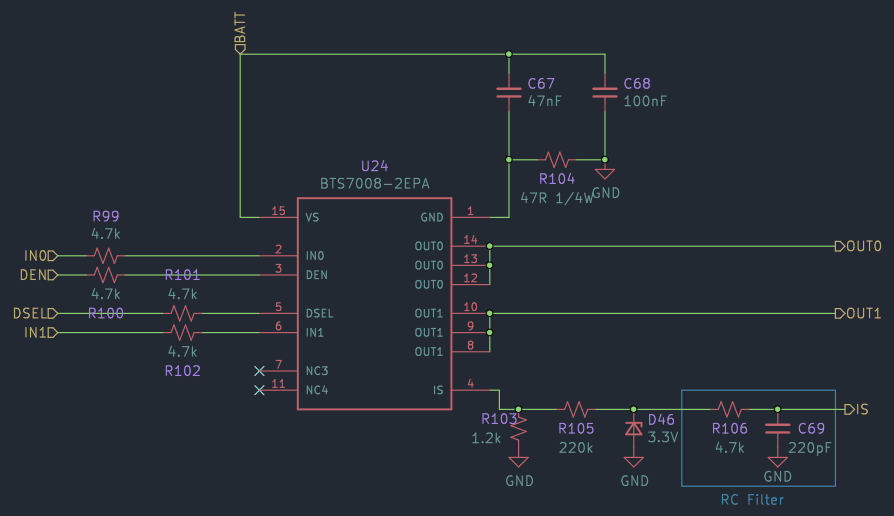

Cory Grant
github.com/corygrant

Sheet:
File: BTS7008_2EPA.kicad_sch

Title: Dingo_PDM

Size: USLetter | Date: 2021-04-01	Rev: v5
KiCad E.D.A. kicad 7.0.1	Id: 10/16