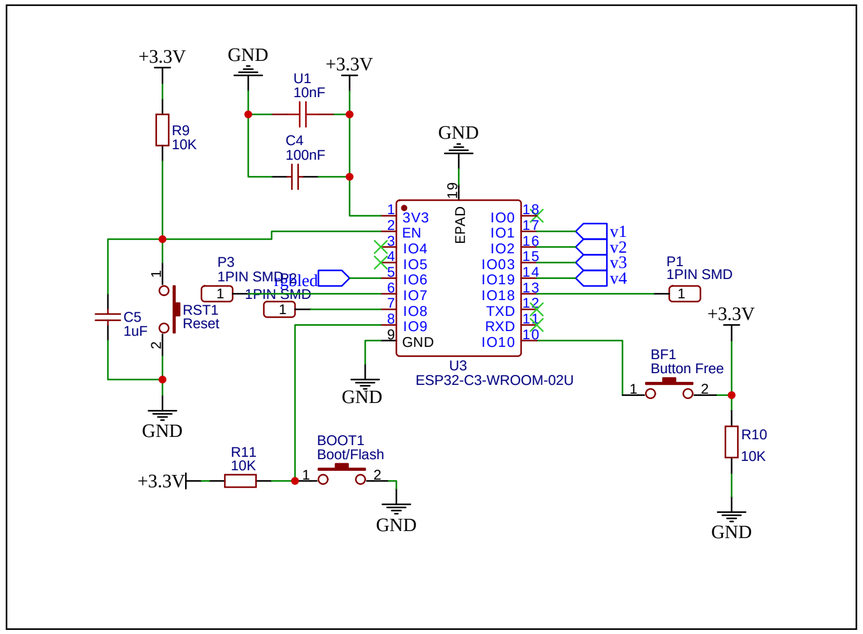

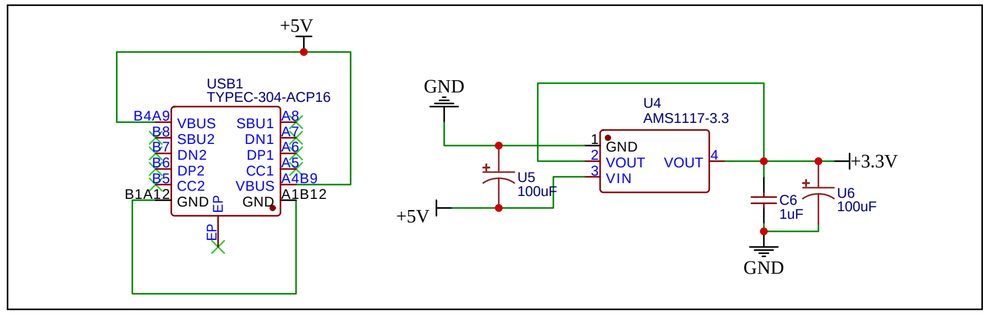

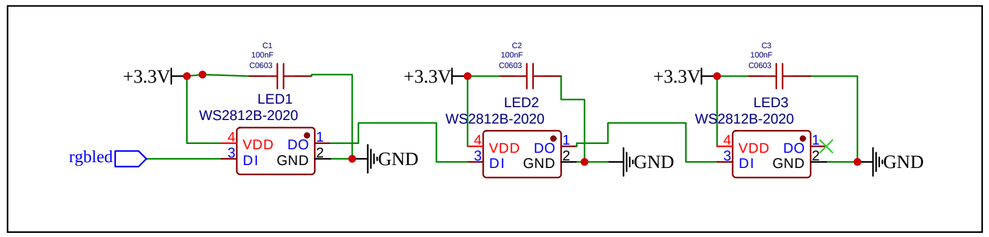

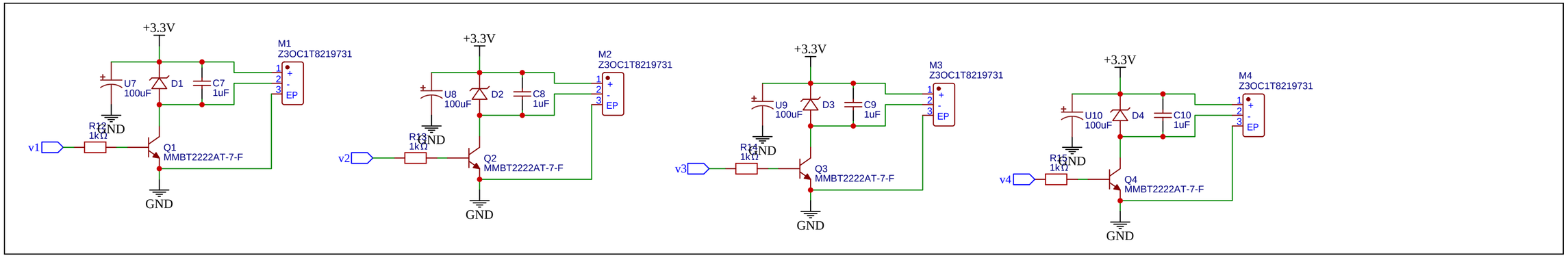

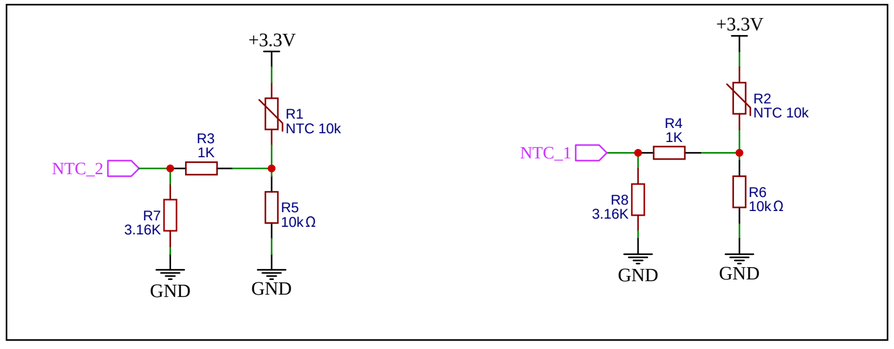

TITLE: EsPildo		REV: 1.0
嘉立创EDA	Company: Automation.art	Sheet: 1/1
	Date: 2023-06-05 Drawn By: aelmaker	