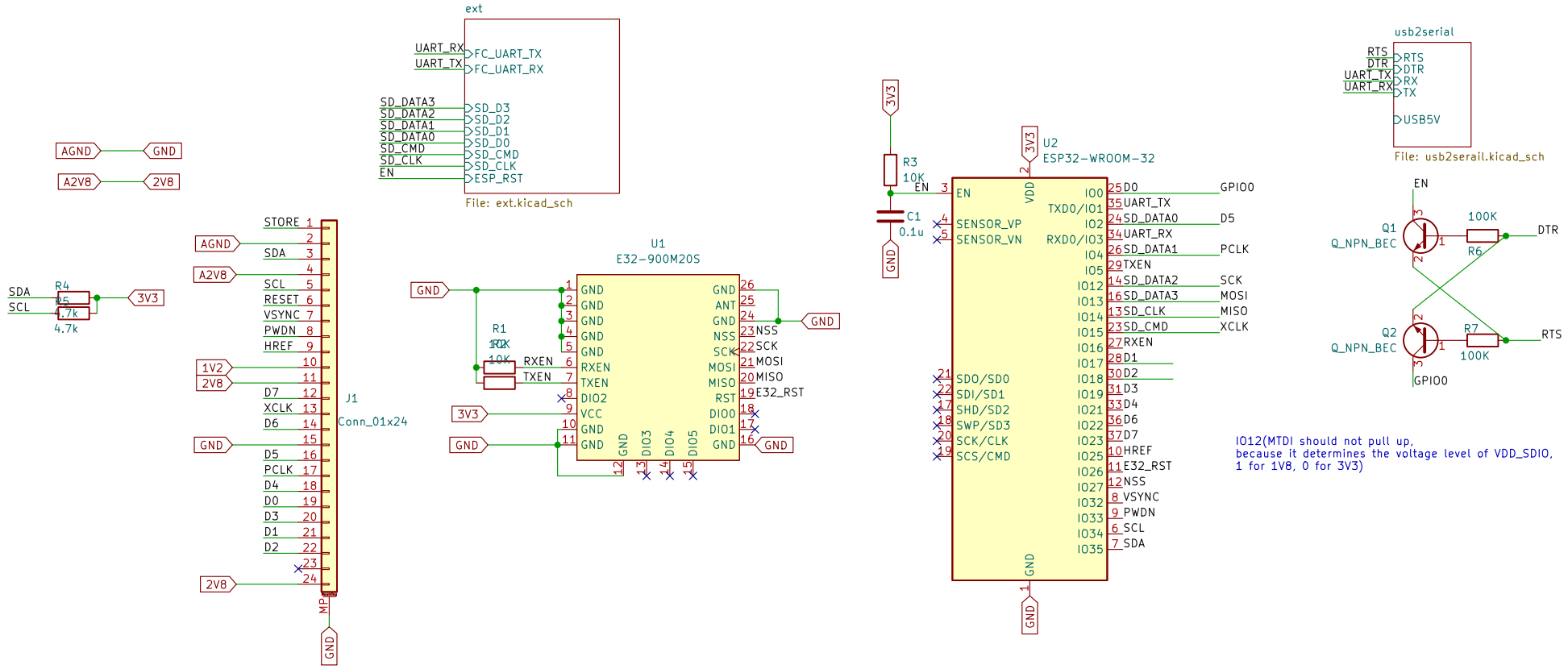
ext
UART_RX
UART_TX
FC_UART_TX
FC_UART_RX
SD_DATA3
SD_DATA2
SD_DATA1
SD_DATA0
SD_CMD
SD_CLK
EN
SD_D3
SD_D2
SD_D1
SD_D0
SD_CMD
SD_CLK
ESP_RST
File: ext.kicad_sch
AGND
GND
A2V8
2V8
STORE
SDA
SCL
RESET
VSYNC
PWDN
HREF
1V2
D7
XCLK
D6
D5
PCLK
D4
D0
D3
D1
D2
MP
J1
Conn_01x24
R4
4.7k
3V3
U1
E32-900M20S
R1
10K
RXEN
TXEN
DIO2
VCC
DIO3
DIO4
DIO5
ANT
NSS
SCK
MOSI
MISO
RST
DIO0
DIO1
E32_RST
3V3
R3
10K
C1
0.1u
U2
ESP32-WROOM-32
VDD
EN
SENSOR_VP
SENSOR_VN
SDO/SD0
SDI/SD1
SHD/SD2
SWP/SD3
SCK/CLK
SCS/CMD
IO0
TXD0/IO1
IO2
RXD0/IO3
IO4
IO5
IO12
IO13
IO14
IO15
IO16
IO17
IO18
IO19
IO21
IO22
IO23
IO25
IO26
IO27
IO32
IO33
IO34
IO35
D0
UART_TX
SD_DATA0
UART_RX
SD_DATA1
TXEN
SD_DATA2
SD_DATA3
SD_CLK
SD_CMD
RXEN
D1
D2
D3
D4
D6
D7
HREF
E32_RST
NSS
VSYNC
PWDN
SCL
SDA
GPIO0
D5
PCLK
SCK
MOSI
MISO
XCLK
usb2serial
RTS
DTR
UART_TX
UART_RX
RX
TX
USB5V
File: usb2serail.kicad_sch
Q1
Q_NPN_BEC
100K
R6
Q2
R7
IO12(MTDI should not pull up,
because it determines the voltage level of VDD_SDIO,
1 for 1V8, 0 for 3V3)

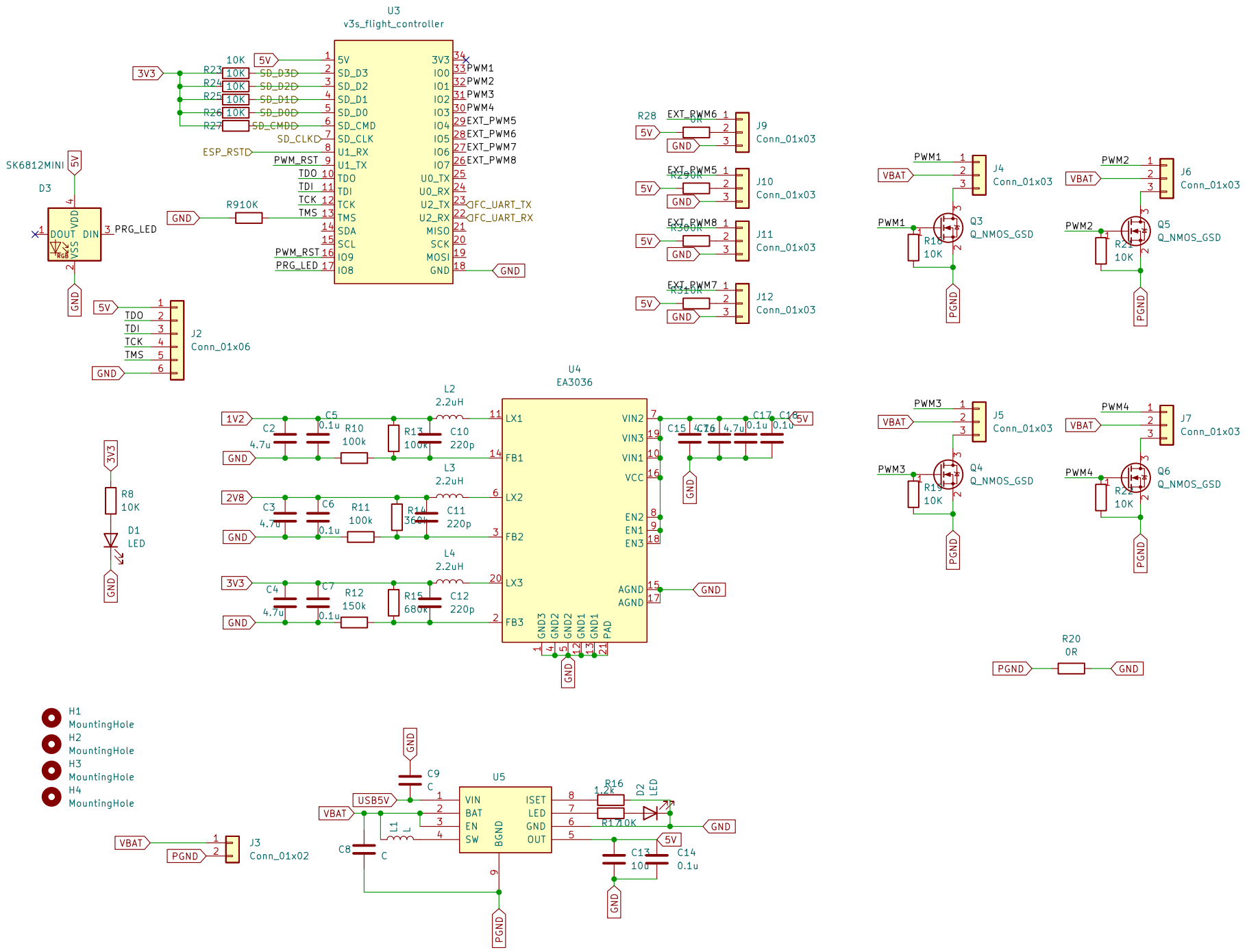
U3
v3s_flight_controller
U4
EA3036
U5
SK6812MINI
D3
DOUT
DIN
VDD
VSS
PRG_LED
R910K
ESP_RST
SD_CLK
SD_CMD
SD_D0
SD_D1
SD_D2
SD_D3
PWM_RST
PRG_LED
TDO
TDI
TCK
TMS
PWM1
PWM2
PWM3
PWM4
EXT_PWM5
EXT_PWM6
EXT_PWM7
EXT_PWM8
FC_UART_TX
FC_UART_RX
J2
Conn_01x06
J3
Conn_01x02
J4
J5
J6
J7
J9
J10
J11
J12
Conn_01x03
Q3
Q4
Q5
Q6
Q_NMOS_GSD
R8
10K
D1
LED
R20
0R
H1
MountingHole
H2
MountingHole
H3
MountingHole
H4
MountingHole
USB5V
VBAT
PGND
L2
2.2uH
L3
2.2uH
L4
2.2uH
1V2
2V8
3V3
LX1
LX2
LX3
FB1
FB2
FB3
VIN2
VIN3
VIN1
VCC
EN2
EN1
EN3
AGND
GND3
GND2
GND1
PAD
C9
C
C8
C
L1
L
R16
1.2k
R17
10K
D2
LED
C13
100
C14
0.1u
ISET
LED
GND
OUT
BAT
EN
SW
BGND

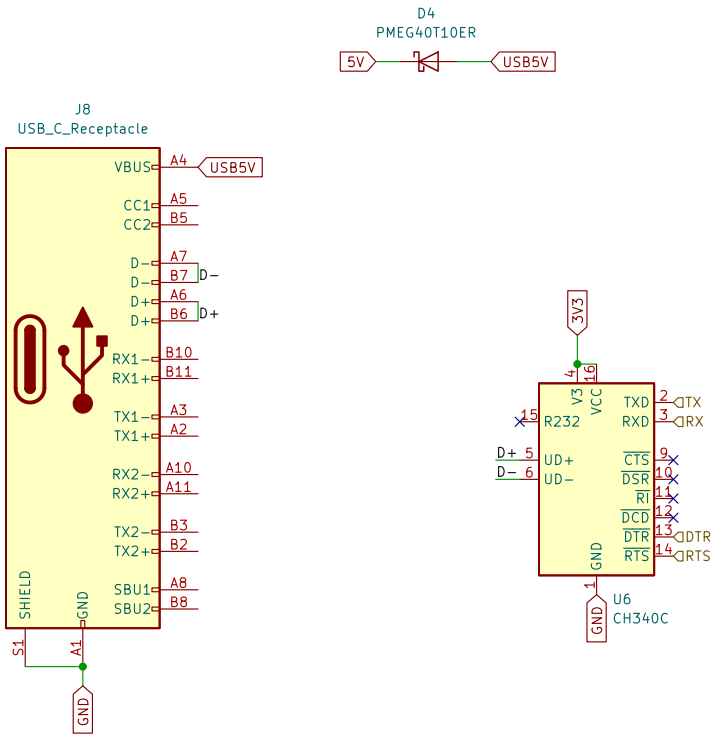
D4
PMEG40T10ER
5V
USB5V
J8
USB_C_Receptacle
VBUS
A4
USB5V
CC1
A5
CC2
B5
D−
A7
D−
B7
D−
D+
A6
D+
B6
D+
RX1−
B10
RX1+
B11
TX1−
A3
TX1+
A2
RX2−
A10
RX2+
A11
TX2−
B3
TX2+
B2
SBU1
A8
SBU2
B8
SHIELD
GND
S1
A1
GND
3V3
4
16
V3
VCC
R232
15
D+ 5
D− 6
UD+
UD−
TXD
2
TX
RXD
3
RX
CTS
9
DSR
10
RI
11
DCD
12
DTR
13
DTR
RTS
14
RTS
GND
1
GND
U6
CH340C