Balance Discharge Dual Power Parallel Connector User Manual

Model # AB100 , Model # AB200

This device incorporates dual power input interfaces and a single power output interface, specifically designed for battery parallel connection applications. Featuring an integrated diode controller, it delivers reverse current protection by effectively blocking reverse current flow and maintain complete isolation between both input power sources to ensure system safety. Furthermore, the device implements intelligent automatic source selection, continuously monitoring and automatically switching to the higher-voltage input to maintain continuous power output.

Notes:

1. When using two batteries as the input power source, parallel discharge for output is supported. However, the two batteries need to be charged independently. This means that if both batteries have combined charge/discharge ports, they can be used together for discharging output, but do not connect the battery's positive terminal back to the VOUT terminal of the device for charging.
2. To prevent damage to the module caused by large arc surges when the air switch is closed, it is not recommended to connect this module in a series control circuit with an air switch. Even if such a connection is used, ensure that all loads are disconnected before closing the switch. Under no circumstances should the air switch be the last component to connect the power supply.
3. When the load is inductive, such as a motor, pay attention to the back EMF generated during motor braking. In applications with strong braking, the back EMF can be significant. Ensure that the back EMF voltage added to the power supply voltage does not exceed the operating voltage of the device.

autorotech.com

Specifications

Model	Max Input Voltage	Max Input Current	Max Input Voltage Differential	Power Wire	Reverse Current Protection	Seamless Power Switching
AB100	100V	100A per channel	20V	10AWG	Supported	Supported
AB200	100V	200A per channel	20V	8AWG	Supported	Supported

Discharge Wiring Diagram

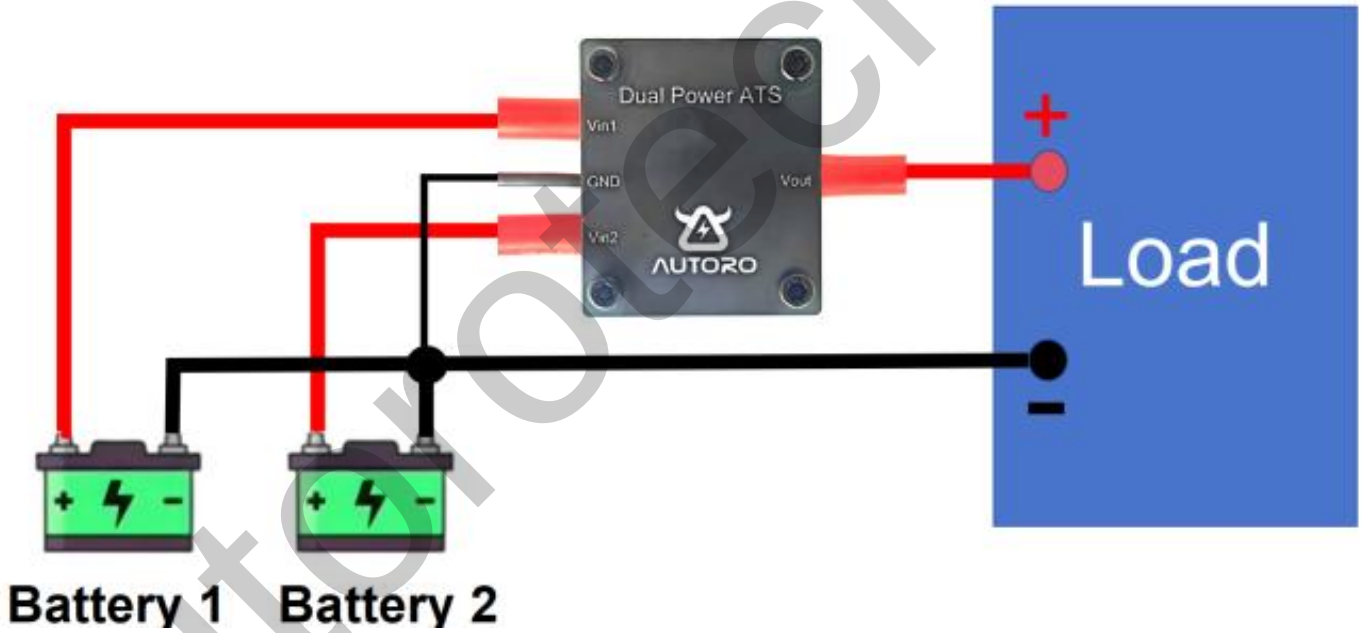

autorotech.com

Wiring Diagram:
Separate Charge/Discharge Port Battery (Charging)

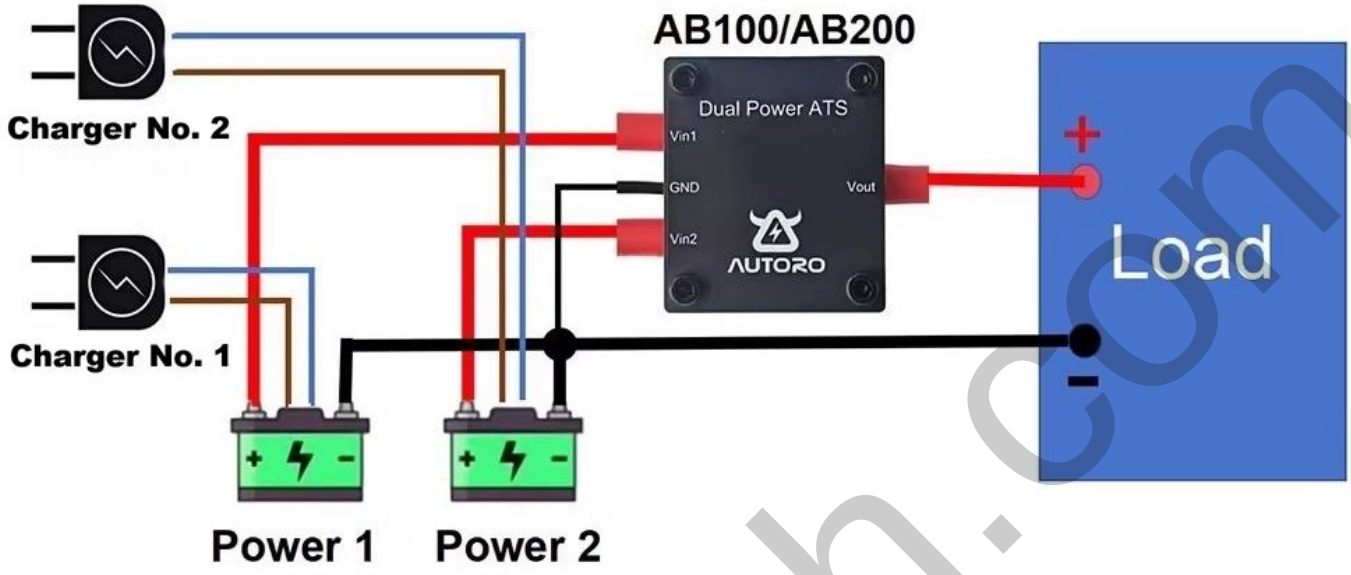

Wiring Diagram:
Battery Common Charge/Discharge Port (Charging)

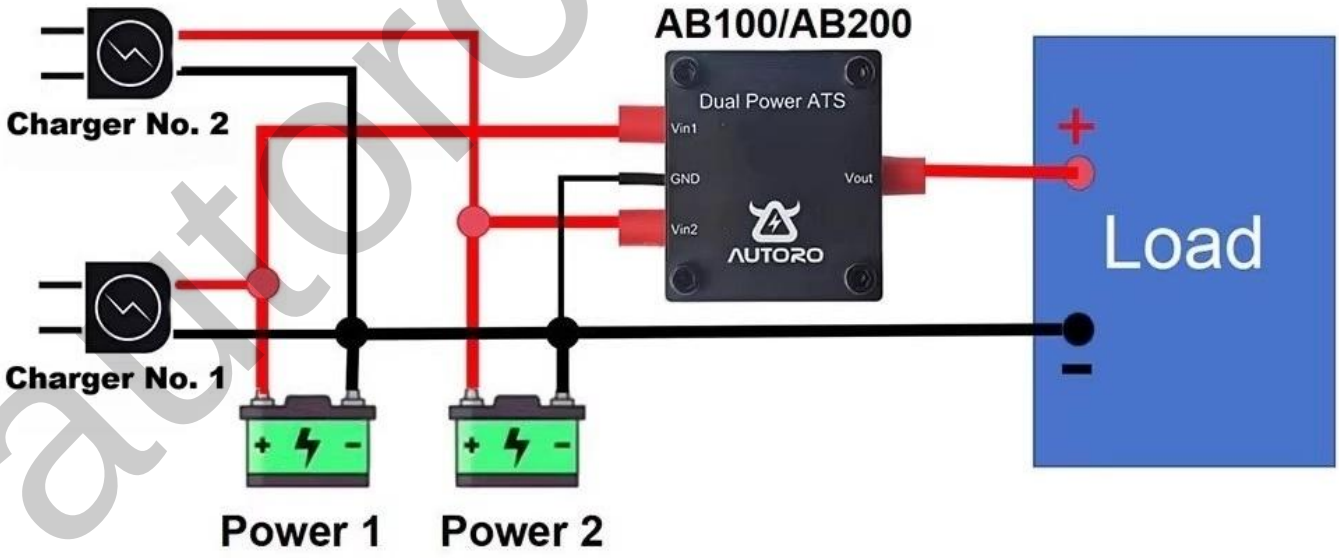

autorotech.com

Welcome to send email if any problem.

Sales email: Autoro.sales@hotmail.com

Support email: Autoro.service@hotmail.com

Website: https://www.autorotech.com

autorotech.com