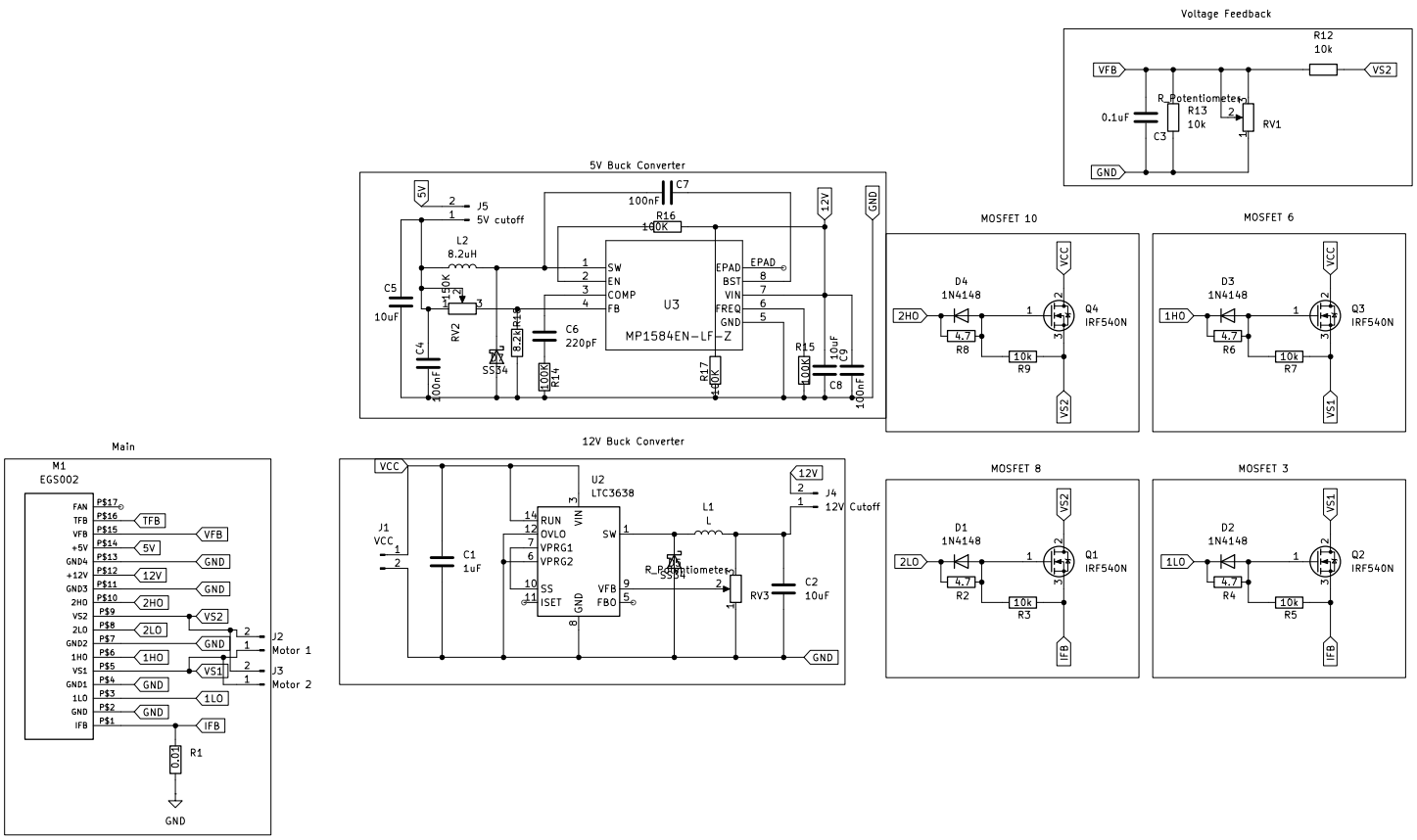
Voltage Feedback
R12
10k
VFB
VS2
R_Potentiometer
R13
10k
0.1uF
C3
RV1
GND
5V Buck Converter
5V
J5
5V cutoff
C7
100nF
R16
100K
12V
GND
L2
8.2uH
C5
10uF
150K
RV2
C4
100nF
SS34
8.2k
R13
C6
220pF
100K
R14
U3
MP1584EN-LF-Z
SW
EN
COMP
FB
EPAD
BST
VIN
FREQ
GND
R17
100K
R15
100K
10uF
C9
C8
100nF
MOSFET 10
D4
1N4148
2HO
4.7
R8
10k
R9
VCC
VS2
Q4
IRF540N
MOSFET 6
D3
1N4148
1HO
4.7
R6
10k
R7
VCC
VS1
Q3
IRF540N
Main
M1
EGS002
FAN
TFB
VFB
+5V
GND4
+12V
GND3
2HO
VS2
2LO
GND2
1HO
VS1
GND1
1LO
GND
IFB
TFB
VFB
5V
GND
12V
GND
2HO
VS2
2LO
GND
1HO
VS1
GND
1LO
GND
IFB
J2
Motor 1
J3
Motor 2
R1
0.01
GND
12V Buck Converter
VCC
J1
VCC
C1
1uF
U2
LTC3638
RUN
OVLO
VPRG1
VPRG2
SS
ISET
VIN
SW
VFB
FBO
GND
L1
L
R_Potentiometer
SS34
RV3
C2
10uF
12V
J4
12V Cutoff
GND
MOSFET 8
D1
1N4148
2LO
4.7
R2
10k
R3
VS2
IFB
Q1
IRF540N
MOSFET 3
D2
1N4148
1LO
4.7
R4
10k
R5
VS1
IFB
Q2
IRF540N