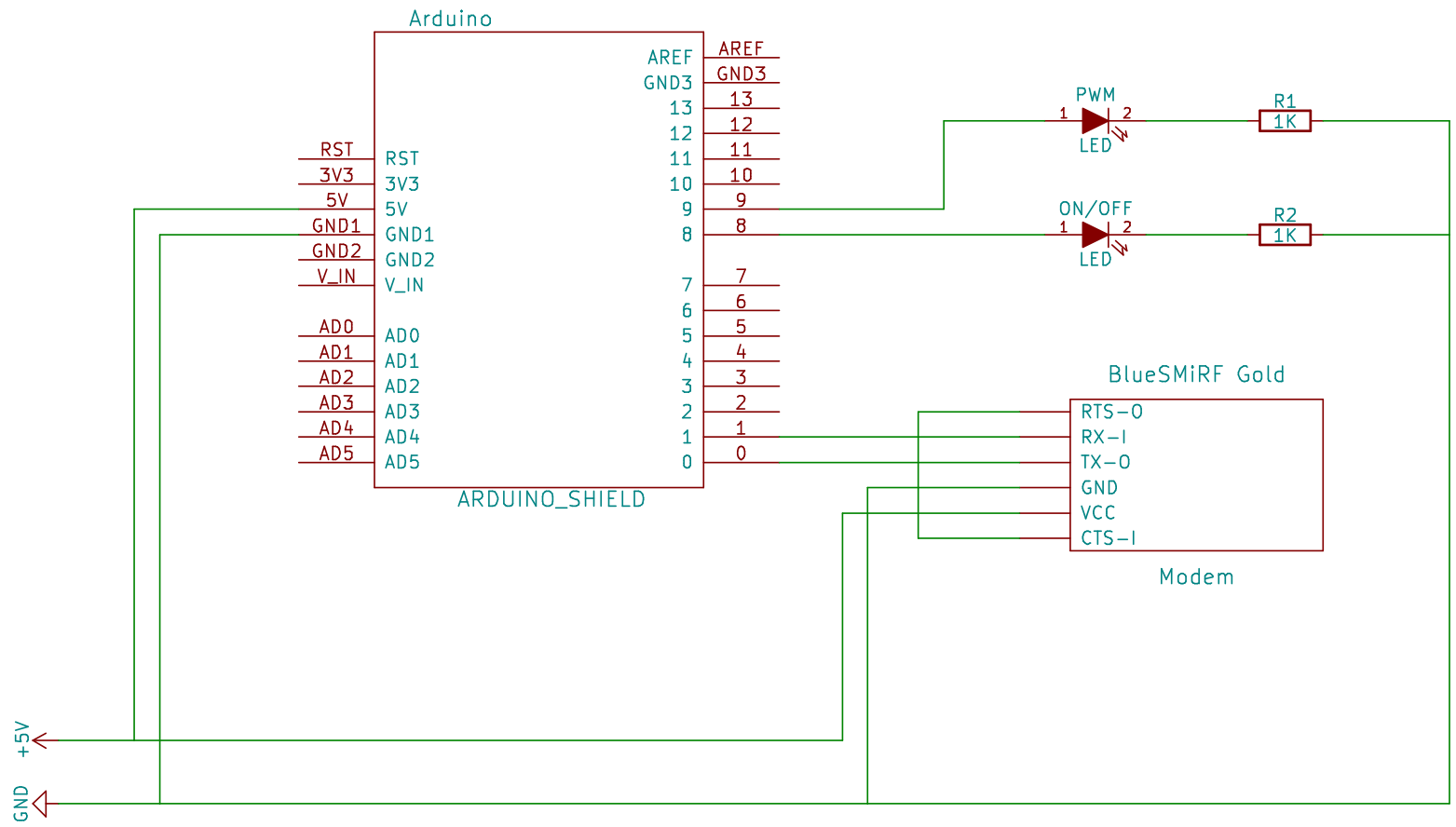

BasicAirData
www.basicairdata.eu

BasicAirData

Sheet: /
File: Led Bluetooth Example.sch

Title: Electrical Scheme for Testing Example

Size: A4	Date: dom 31 gen 2016	**Rev: 1.0**
KiCad E.D.A. kicad (after 2015-mar-04 BZR unknown)-product		Id: 1/1