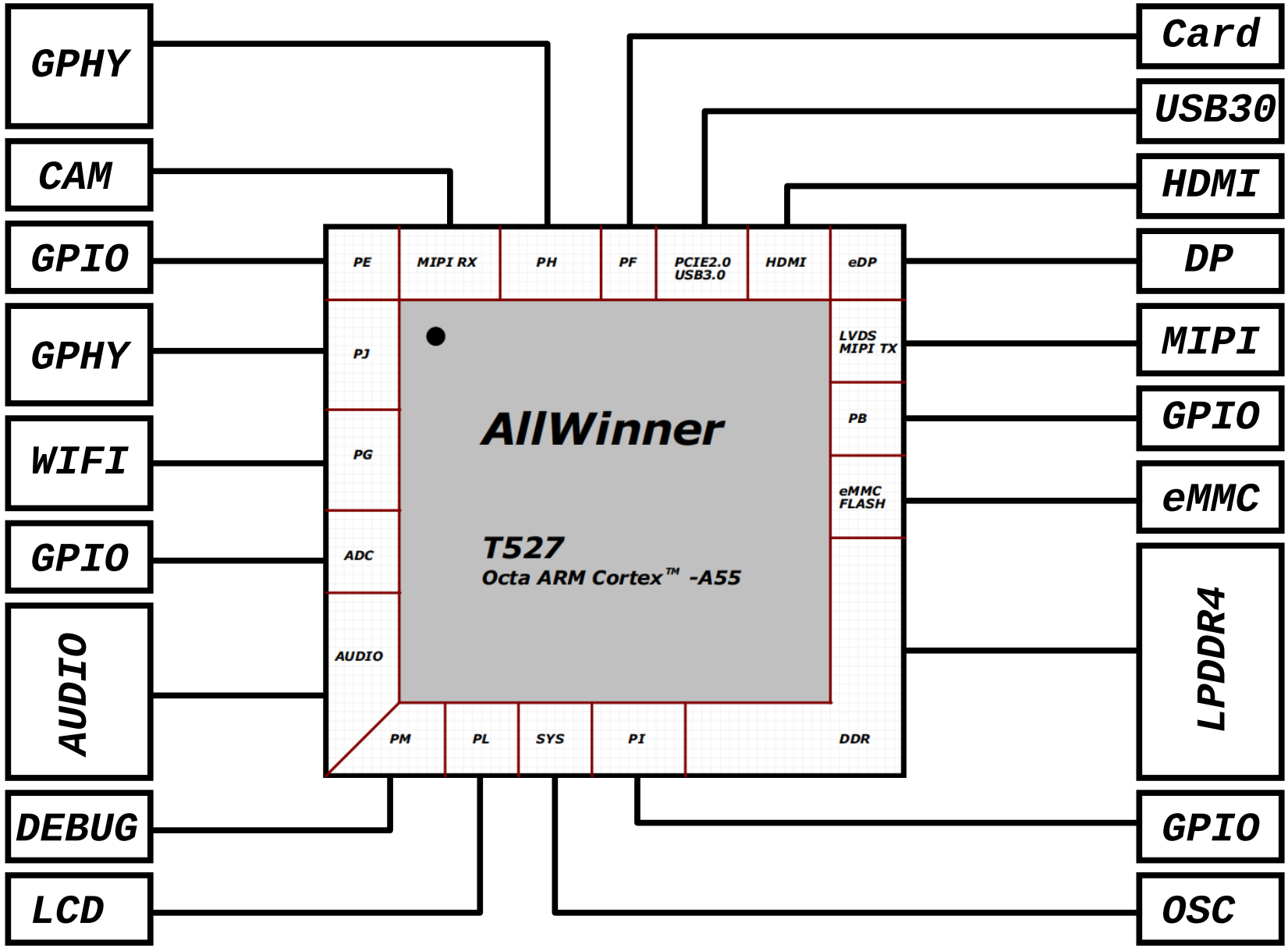

TITLE: Avaota A1 八核 AIoT 开发板			REV: 1.0
	Company: YuzukiHD	Sheet: 1	Total:13
	Date: 2024-04-25	Drawn By: GloomyGhost	

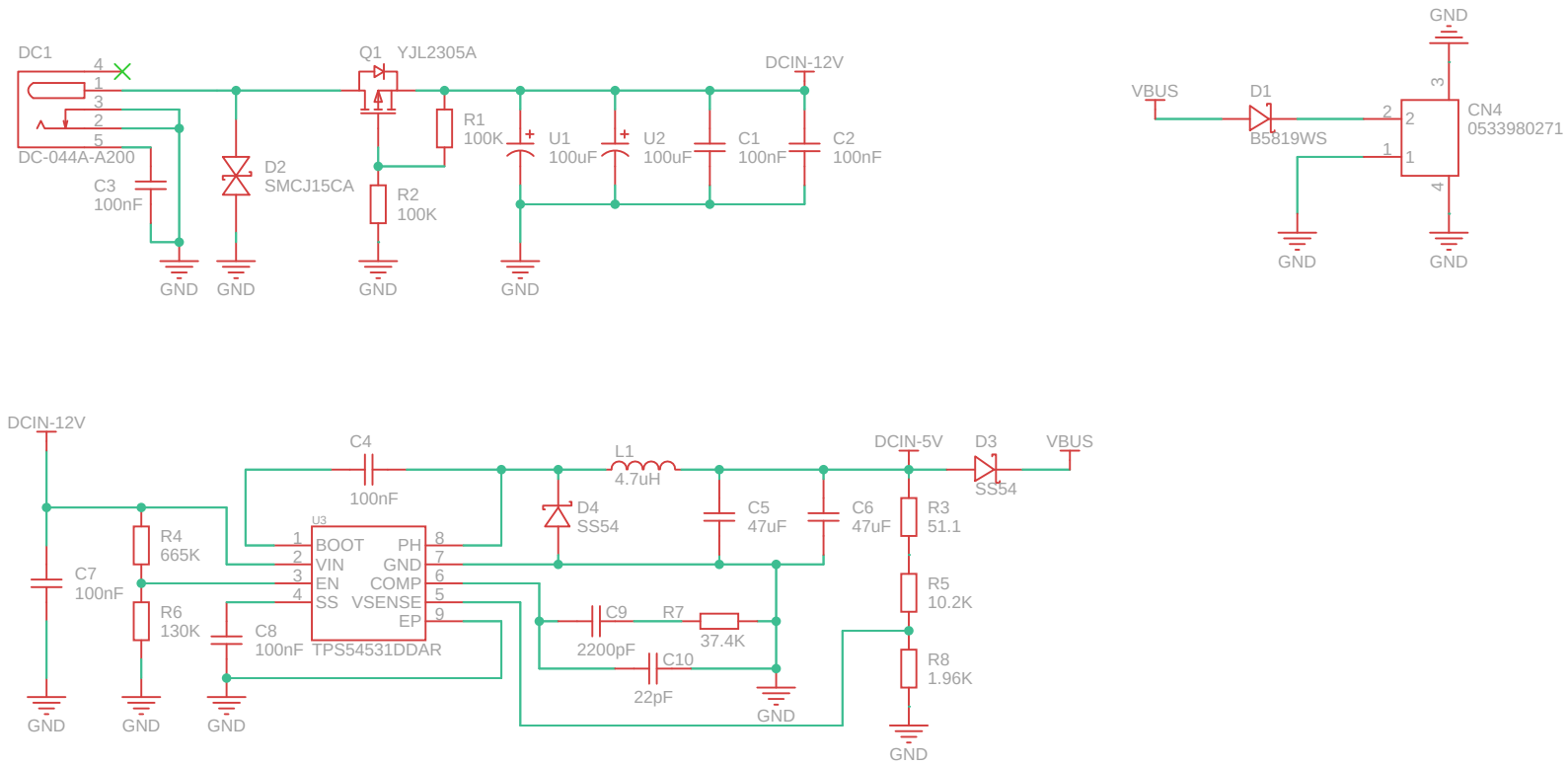

TITLE: Avaota A1 八核 AIoT 开发板		REV: 1.0
Company: YuzukiHD	Sheet: 2	Total:13
Date: 2024-04-25	Drawn By: GloomyGhost	

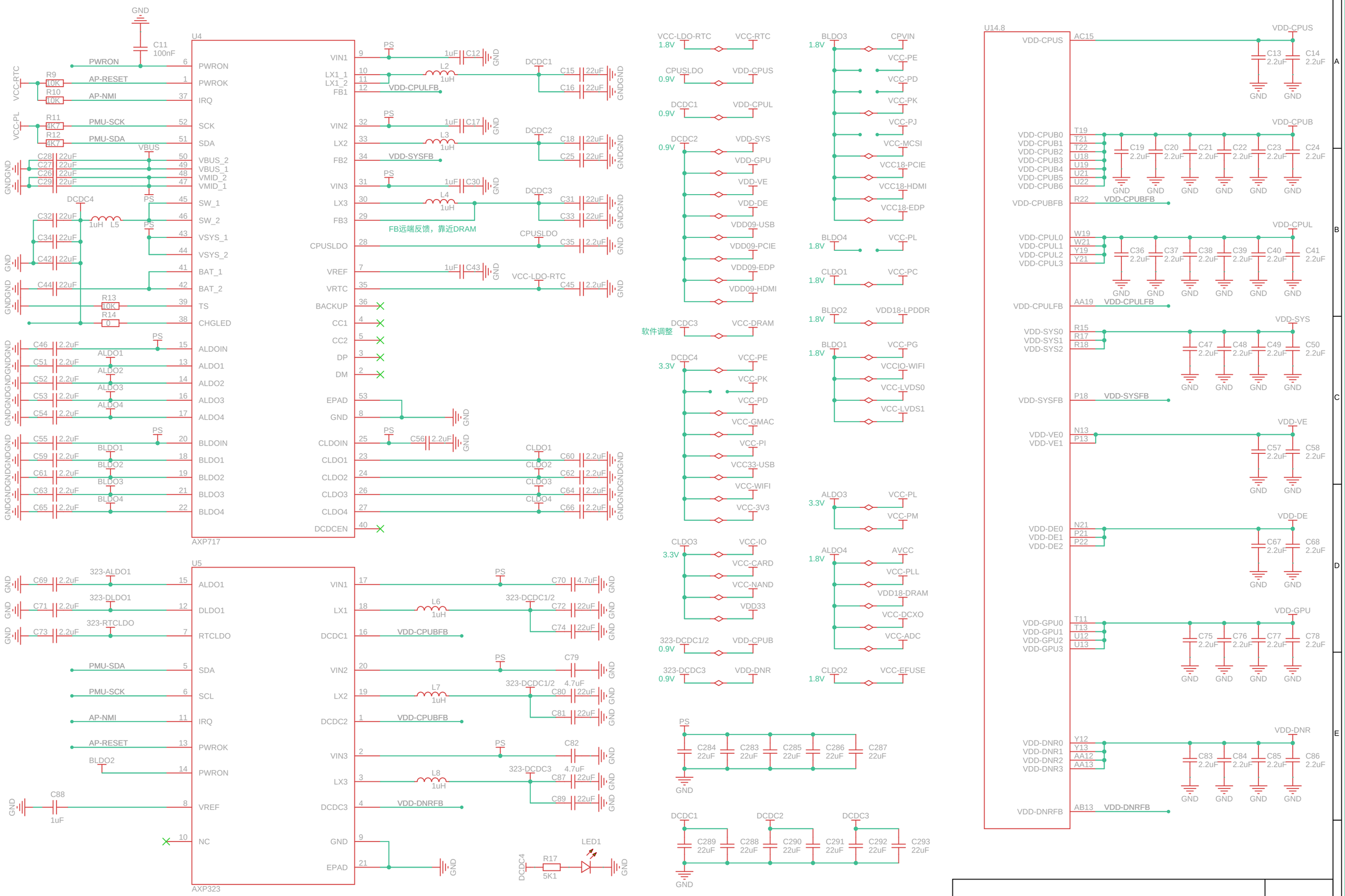

TITLE: Avaota A1 八核 AIoT 开发板

REV: 1.0

Company: YuzukiHD

Sheet: 3

Total: 13

Date: 2024-04-03

Drawn By: GloomyGhost

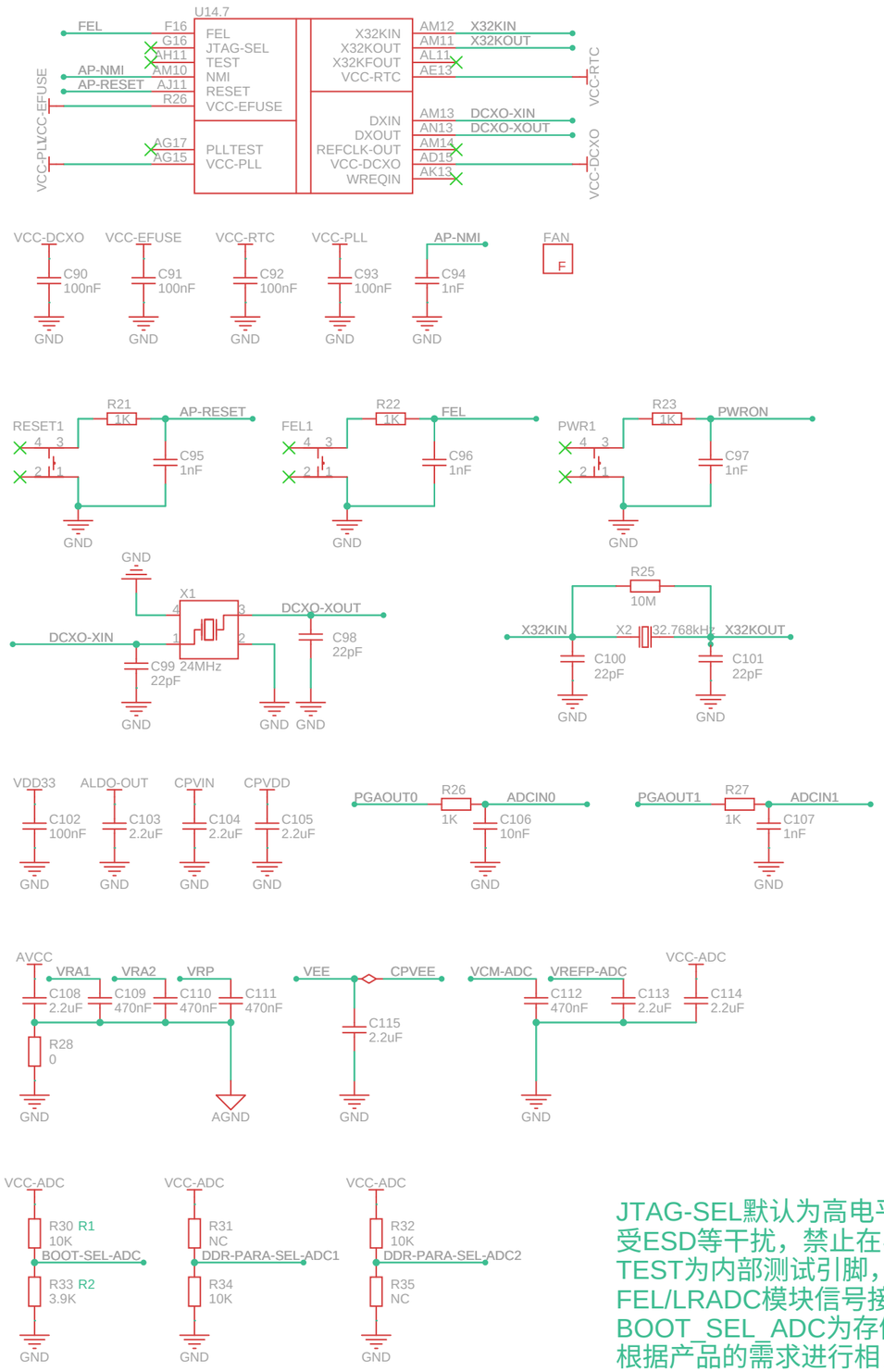

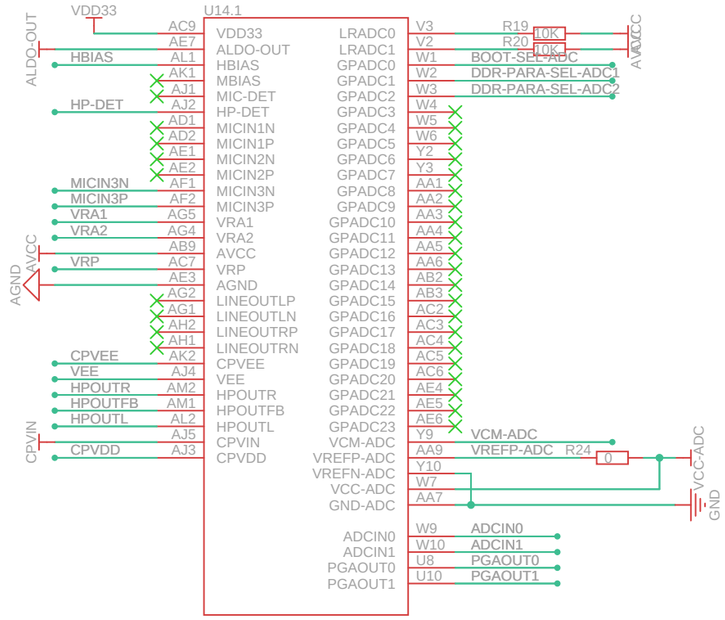

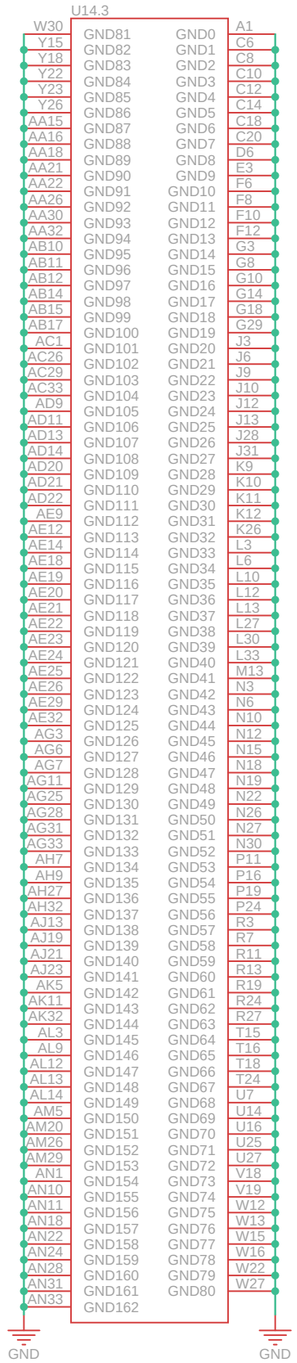

NO.	R1	R2	Boot Select type
1	NC	10K	SMHC0->MLC NAND->SLC NAND->try(except SPI in PJ)
2	10K	1K	SMHC0->SLC NAND->MLC NAND->try(except SPI in PJ)
3	10K	2K2	SMHC0->EMMC_USER->EMMC_BOOT->try(except SPI in PJ)
4	10K	3K9	SMHC0->EMMC_BOOT->EMMC_USER->try(except SPI in PJ)
5	6K8	4K7	SMHC0->SPI NOR->try(except SPI in PJ)
6	6K8	6K8	SMHC0->SPI NAND->try(except SPI in PJ)
7	4K3	6K8	SMHC0->SPI NOR in PJ->try
8	2K2	10K	SMHC0->SPI NAND in PJ->try
9	10K	NC	Reserved

try default order:(selected fail media will not try)
EMMC_USER->EMMC_BOOT->SLC NAND->MLC NAND->SPI NOR->SPI NAND

JTAG-SEL默认为高电平，默认浮空；若要配置为低电平，直接接地即可。此信号为敏感信号，易受ESD等干扰，禁止在实际产品中引出一段浮空走线。
TEST为内部测试引脚，实际应用请做悬空处理，禁止引出一段浮空走线。
FEL/LRADC模块信号接按键时要接1nF去抖动电容，请勿删除或者更改为其他容值。
BOOT_SEL_ADC为存储介质启动先后顺序配置脚，用于调整NAND和EMMC的启动顺序，可以根据产品的需求进行相关配置。T527默认开启BOOT_SEL_ADC pin识别启动顺序。

TITLE: Avaota A1 八核 AIoT 开发板			REV: 1.0
	Company: YuzukiHD	Sheet: 4	Total: 13
	Date: 2024-05-12	Drawn By: GloomyGhost	

TITLE: Avaota A1 八核 AIoT 开发板			REV: 1.0
	Company: YuzukiHD	Sheet:5	Total:13
	Date: 2024-02-20	Drawn By: GloomyGhost	

TITLE: Avaota A1 八核 AIoT 开发板		REV: 1.0
	Company: YuzukiHD	Sheet: 6 / Total: 13
	Date: 2024-04-03	Drawn By: GloomyGhost

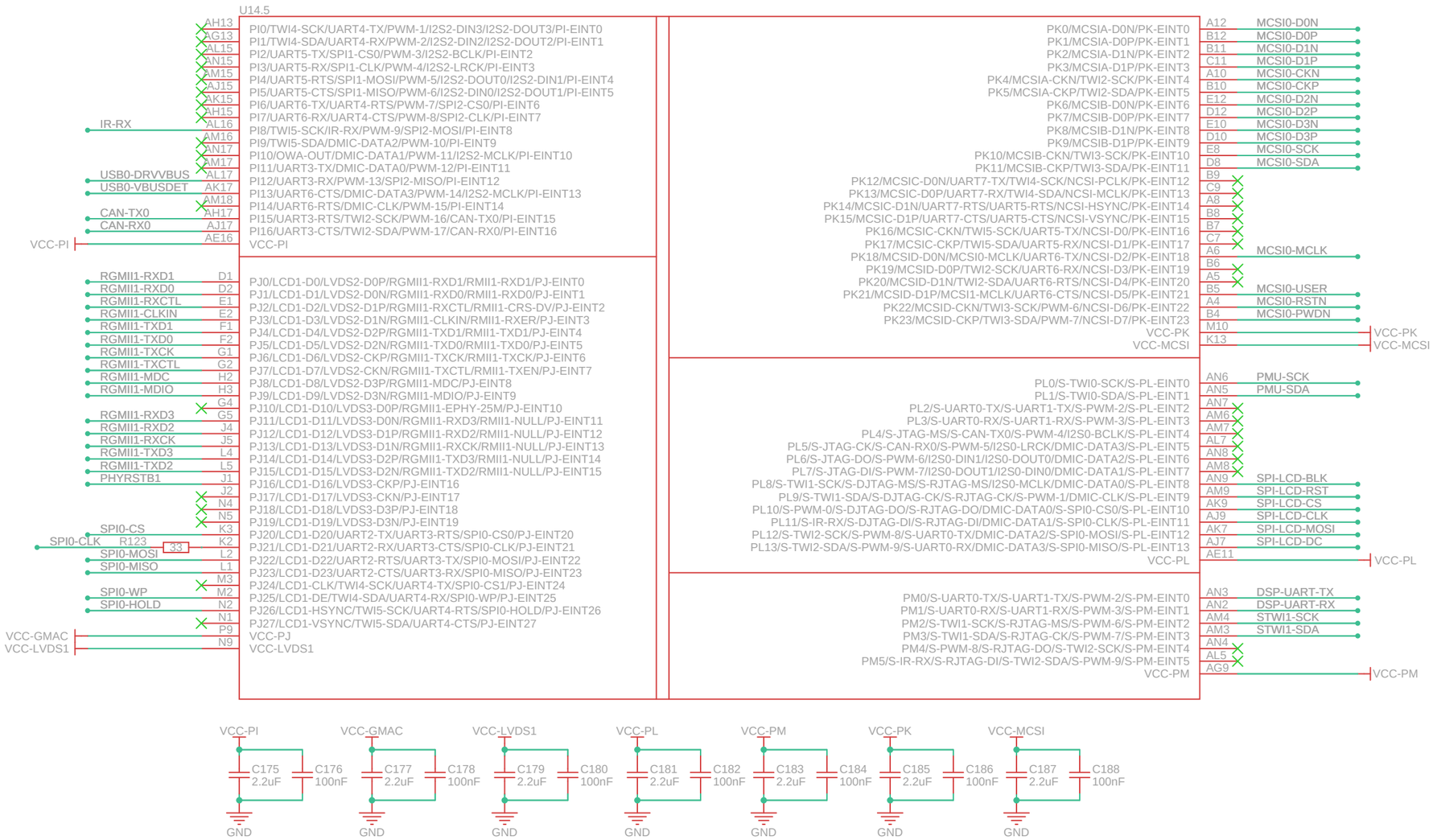

TITLE: Avaota A1 八核 AIoT 开发板		REV: 1.0
Company: YuzukiHD	Sheet: 7	Total: 13
Date: 2024-04-03	Drawn By: GloomyGhost	

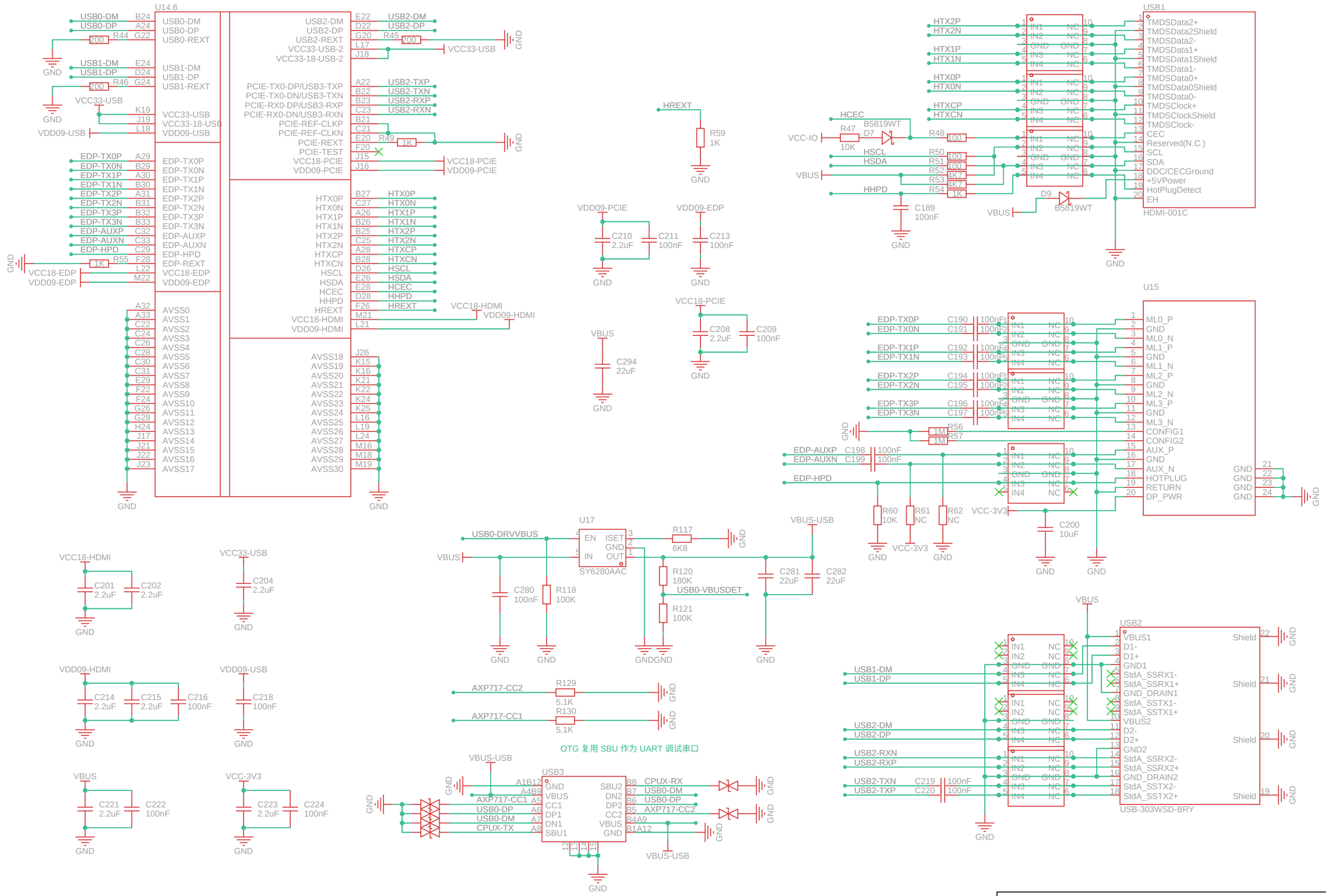

TITLE: Avaota A1 八核 AIoT 开发板	REV: 1.0
Company: YuzukiHD	Sheet: 8 / Total: 13
Date: 2024-05-12	Drawn By: GloomyGhost

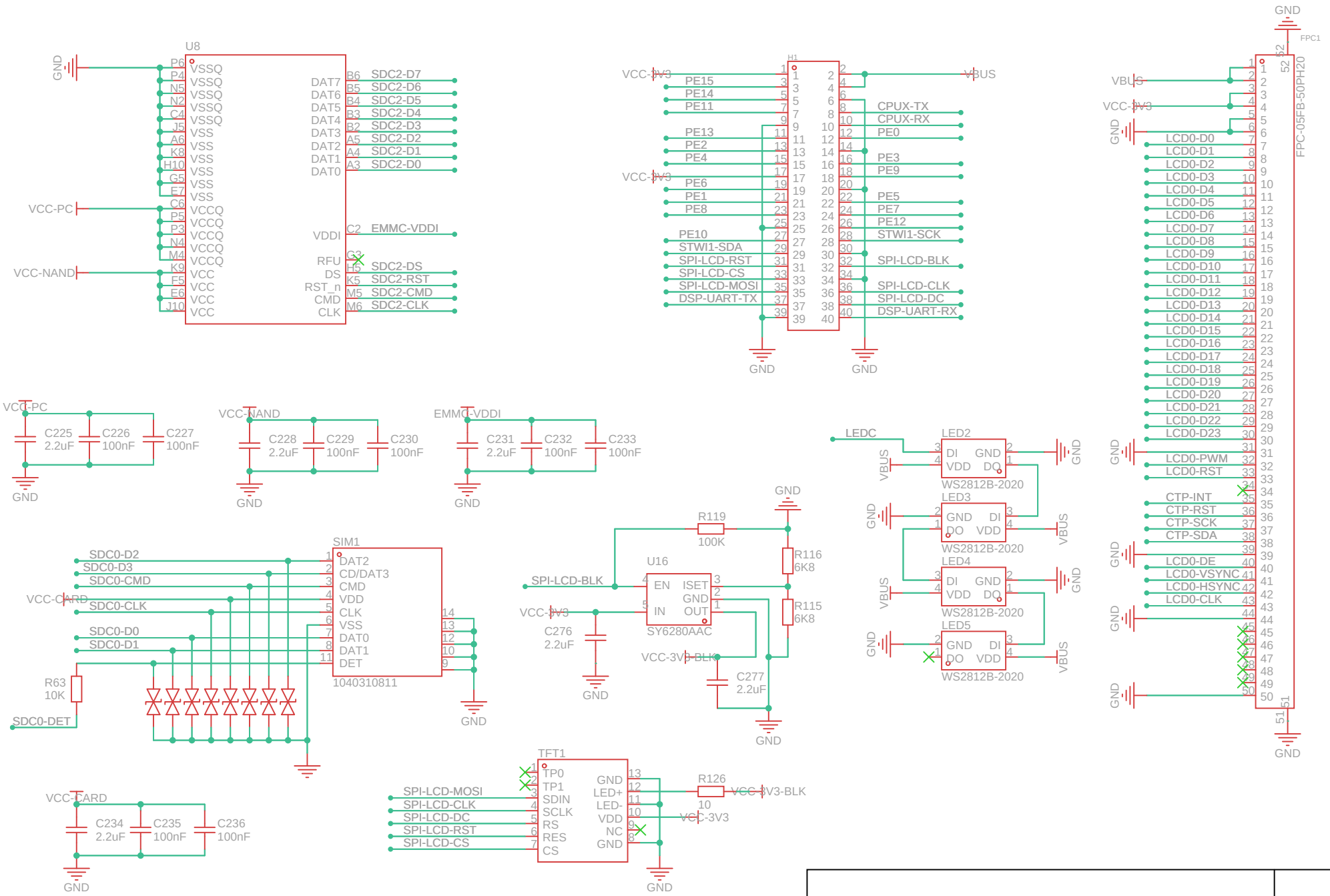

TITLE: Avaota A1 八核 AIoT 开发板		REV: 1.0
Company: YuzukiHD	Sheet: 9	Total: 13
Date: 2024-05-08	Drawn By: GloomyGhost	

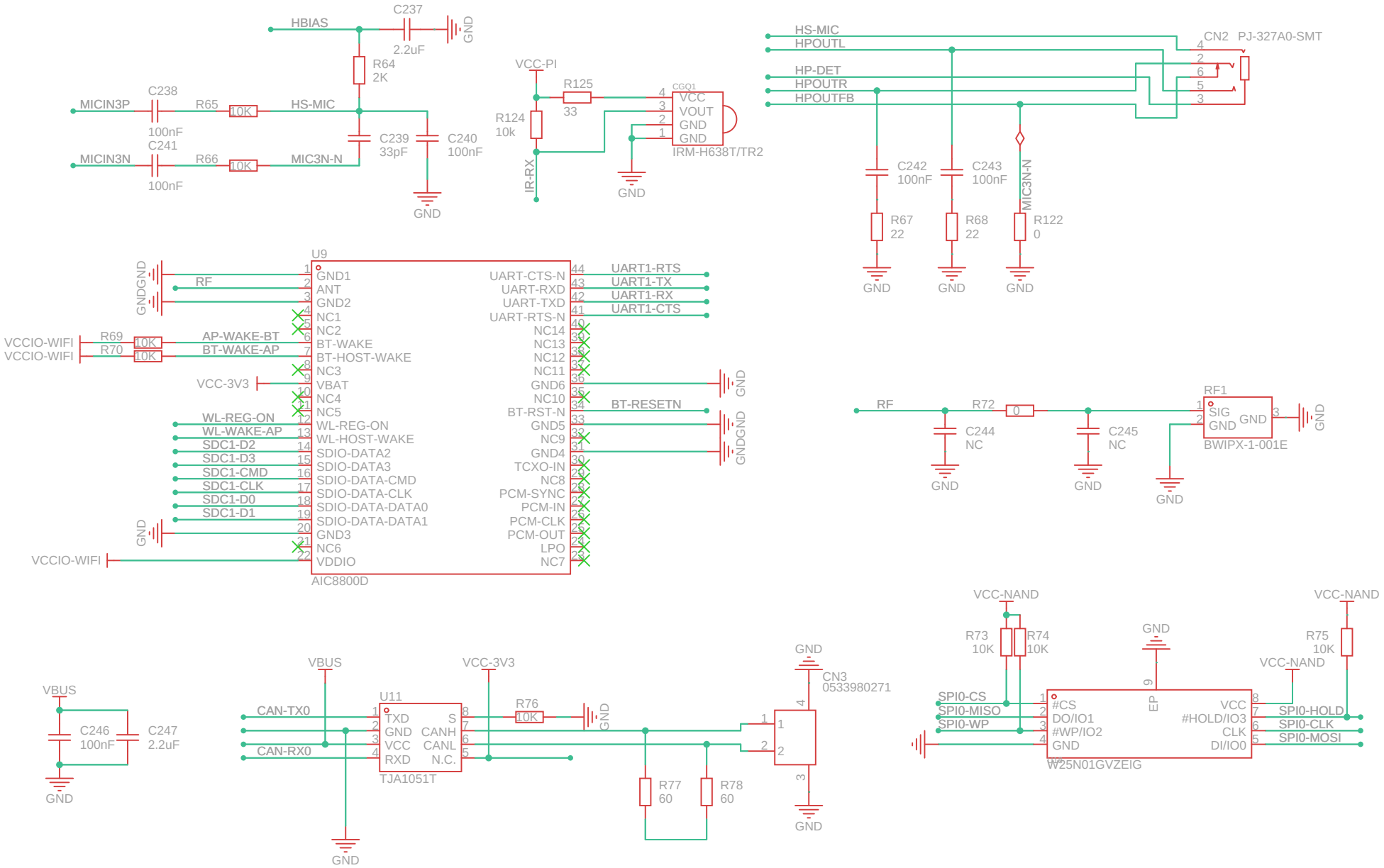

TITLE: Avaota A1 八核 AIoT 开发板			REV: 1.0
	Company: YuzukiHD	Sheet: 10	Total: 13
	Date: 2024-02-28	Drawn By: GloomyGhost	

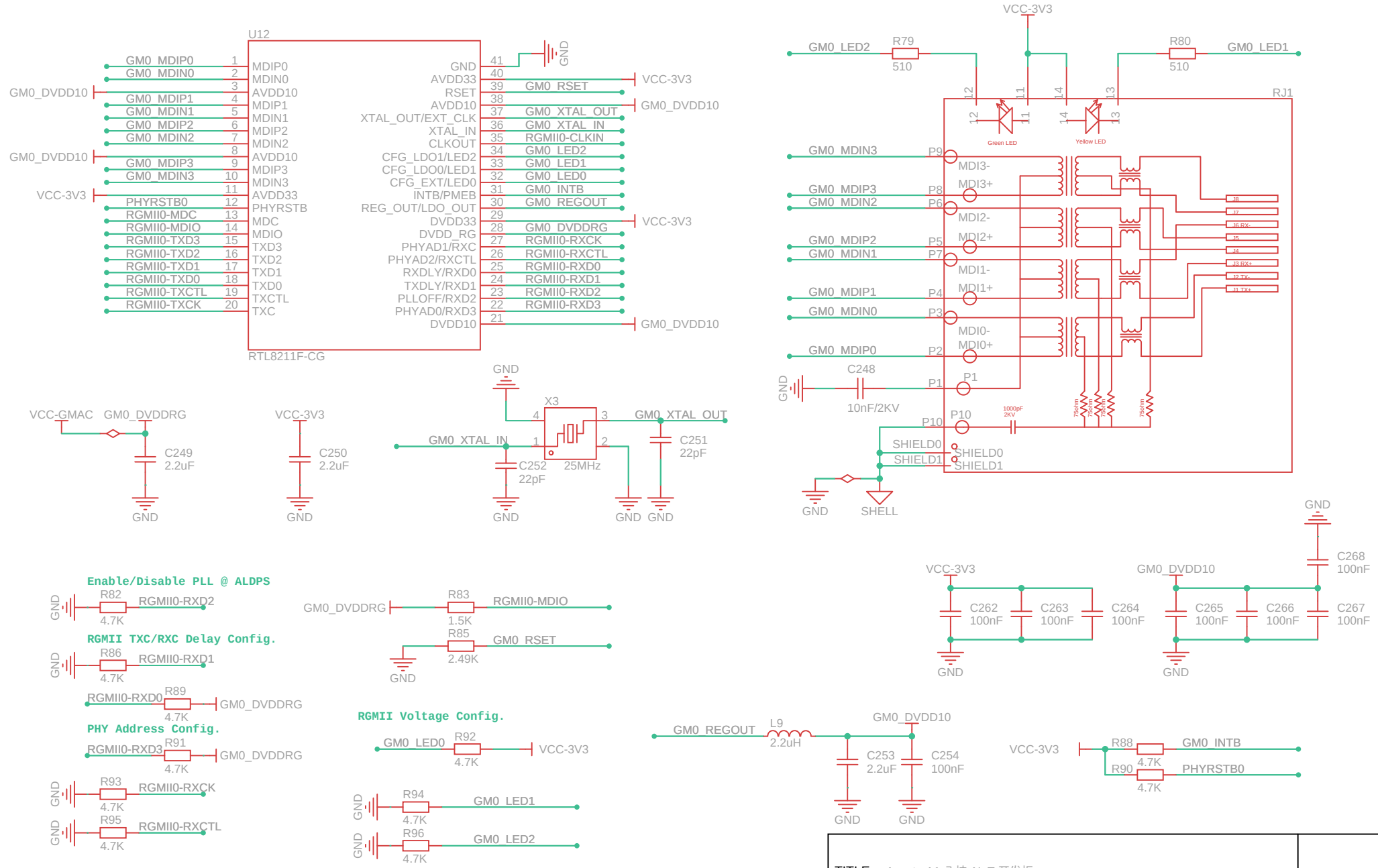

TITLE: Avaota A1 八核 AIoT 开发板		REV: 1.0
	Company: YuzukiHD	Sheet: 11 / Total: 13
	Date: 2024-04-03	Drawn By: GloomyGhost

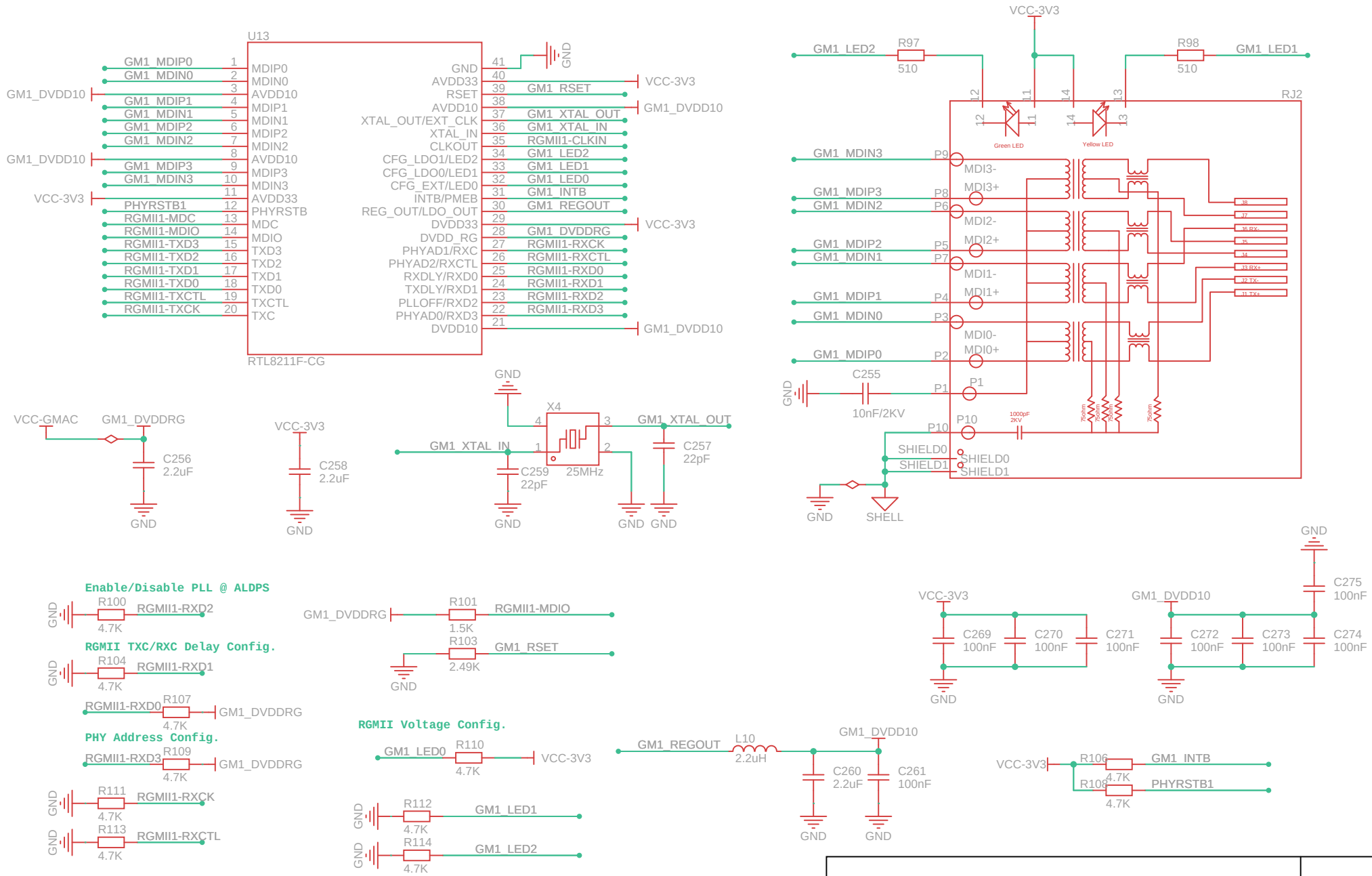

TITLE: Avaota A1 八核 AIoT 开发板		REV: 1.0
Company: YuzukiHD	Sheet: 12	Total: 13
Date: 2024-04-03	Drawn By: GloomyGhost	

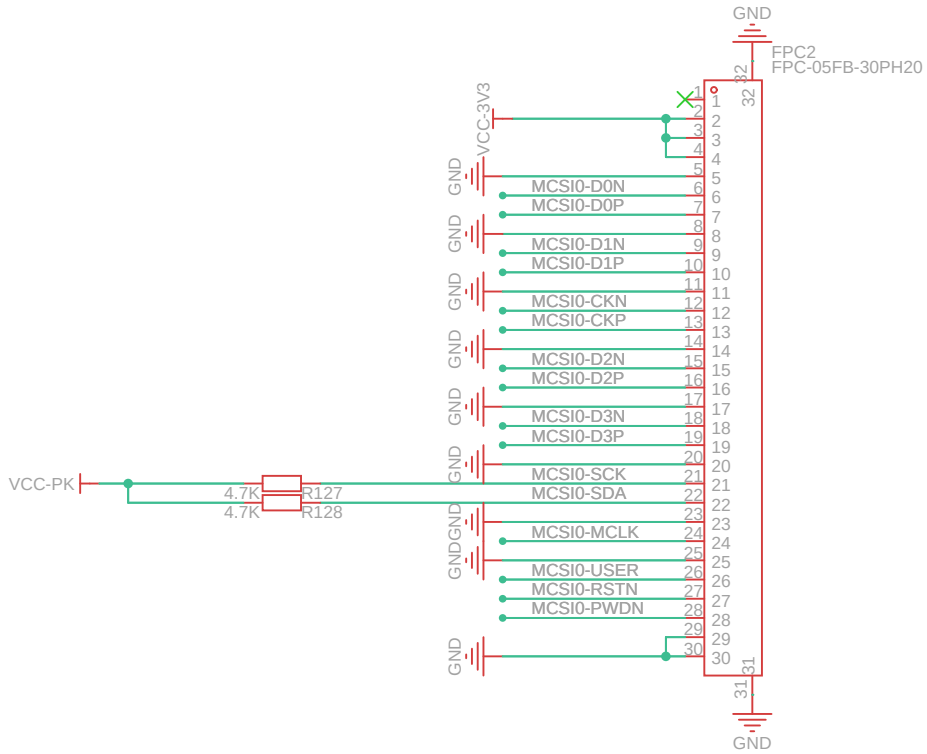

TITLE: Avaota A1 八核 AIoT 开发板			REV: 1.0
	Company: YuzukiHD	Sheet: 13	Total: 13
	Date: 2024-02-28	Drawn By: GloomyGhost	