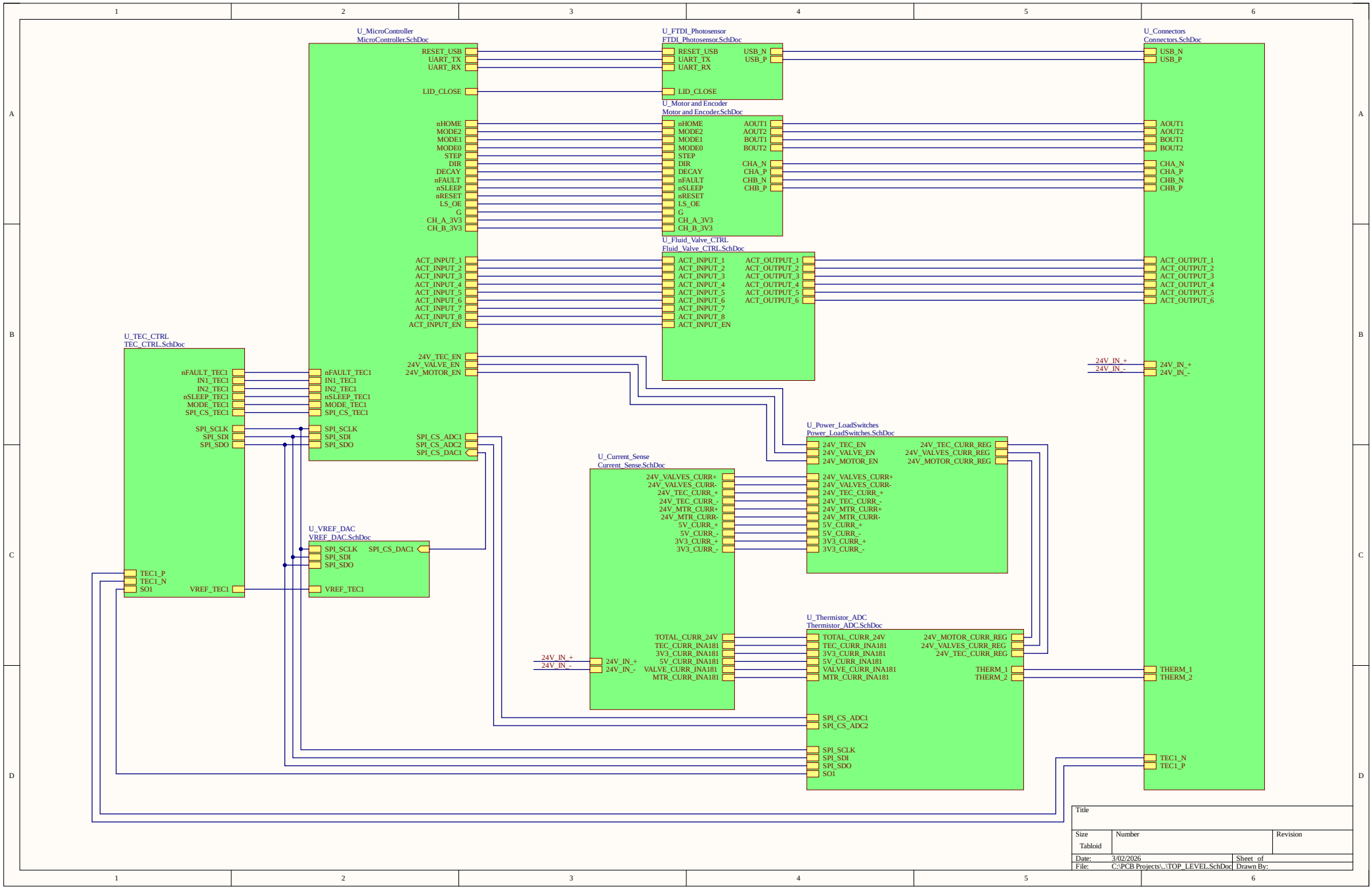
U_MicroController
MicroController.SchDoc
RESET_USB
UART_TX
UART_RX
LID_CLOSE
nHOME
MODE2
MODE1
MODE0
STEP
DIR
DECAY
nFAULT
nSLEEP
nRESET
LS_OE
G
CH_A_3V3
CH_B_3V3
ACT_INPUT_1
ACT_INPUT_2
ACT_INPUT_3
ACT_INPUT_4
ACT_INPUT_5
ACT_INPUT_6
ACT_INPUT_7
ACT_INPUT_8
ACT_INPUT_EN
24V_TEC_EN
24V_VALVE_EN
24V_MOTOR_EN
nFAULT_TEC1
IN1_TEC1
IN2_TEC1
nSLEEP_TEC1
MODE_TEC1
SPI_CS_TEC1
SPI_SCLK
SPI_SDI
SPI_SDO
SPI_CS_ADC1
SPI_CS_ADC2
SPI_CS_DAC1
U_FTDI_Photosensor
FTDI_Photosensor.SchDoc
RESET_USB
UART_TX
UART_RX
USB_N
USB_P
LID_CLOSE
U_Motor and Encoder
Motor and Encoder.SchDoc
nHOME
MODE2
MODE1
MODE0
STEP
DIR
DECAY
nFAULT
nSLEEP
nRESET
LS_OE
G
CH_A_3V3
CH_B_3V3
AOUT1
AOUT2
BOUT1
BOUT2
CHA_N
CHA_P
CHB_N
CHB_P
U_Fluid_Valve_CTRL
Fluid_Valve_CTRL.SchDoc
ACT_INPUT_1
ACT_INPUT_2
ACT_INPUT_3
ACT_INPUT_4
ACT_INPUT_5
ACT_INPUT_6
ACT_INPUT_7
ACT_INPUT_8
ACT_INPUT_EN
ACT_OUTPUT_1
ACT_OUTPUT_2
ACT_OUTPUT_3
ACT_OUTPUT_4
ACT_OUTPUT_5
ACT_OUTPUT_6
U_Connectors
Connectors.SchDoc
USB_N
USB_P
AOUT1
AOUT2
BOUT1
BOUT2
CHA_N
CHA_P
CHB_N
CHB_P
ACT_OUTPUT_1
ACT_OUTPUT_2
ACT_OUTPUT_3
ACT_OUTPUT_4
ACT_OUTPUT_5
ACT_OUTPUT_6
24V_IN_+
24V_IN_-
THERM_1
THERM_2
TEC1_N
TEC1_P
U_TEC_CTRL
TEC_CTRL.SchDoc
nFAULT_TEC1
IN1_TEC1
IN2_TEC1
nSLEEP_TEC1
MODE_TEC1
SPI_CS_TEC1
SPI_SCLK
SPI_SDI
SPI_SDO
TEC1_P
TEC1_N
SO1
VREF_TEC1
U_VREF_DAC
VREF_DAC.SchDoc
SPI_SCLK
SPI_SDI
SPI_SDO
SPI_CS_DAC1
VREF_TEC1
U_Power_LoadSwitches
Power_LoadSwitches.SchDoc
24V_TEC_EN
24V_VALVE_EN
24V_MOTOR_EN
24V_TEC_CURR_REG
24V_VALVES_CURR_REG
24V_MOTOR_CURR_REG
24V_VALVES_CURR+
24V_VALVES_CURR-
24V_TEC_CURR_+
24V_TEC_CURR_-
24V_MTR_CURR+
24V_MTR_CURR-
5V_CURR_+
5V_CURR_-
3V3_CURR_+
3V3_CURR_-
U_Current_Sense
Current_Sense.SchDoc
24V_VALVES_CURR+
24V_VALVES_CURR-
24V_TEC_CURR_+
24V_TEC_CURR_-
24V_MTR_CURR+
24V_MTR_CURR-
5V_CURR_+
5V_CURR_-
3V3_CURR_+
3V3_CURR_-
TOTAL_CURR_24V
TEC_CURR_INA181
3V3_CURR_INA181
5V_CURR_INA181
VALVE_CURR_INA181
MTR_CURR_INA181
24V_IN_+
24V_IN_-
U_Thermistor_ADC
Thermistor_ADC.SchDoc
TOTAL_CURR_24V
TEC_CURR_INA181
3V3_CURR_INA181
5V_CURR_INA181
VALVE_CURR_INA181
MTR_CURR_INA181
24V_MOTOR_CURR_REG
24V_VALVES_CURR_REG
24V_TEC_CURR_REG
THERM_1
THERM_2
SPI_CS_ADC1
SPI_CS_ADC2
SPI_SCLK
SPI_SDI
SPI_SDO
SO1
Title
Size
Tabloid
Number
Revision
Date: 3/02/2026
Sheet of
File: C:\PCB Projects\...\TOP_LEVEL.SchDoc
Drawn By:

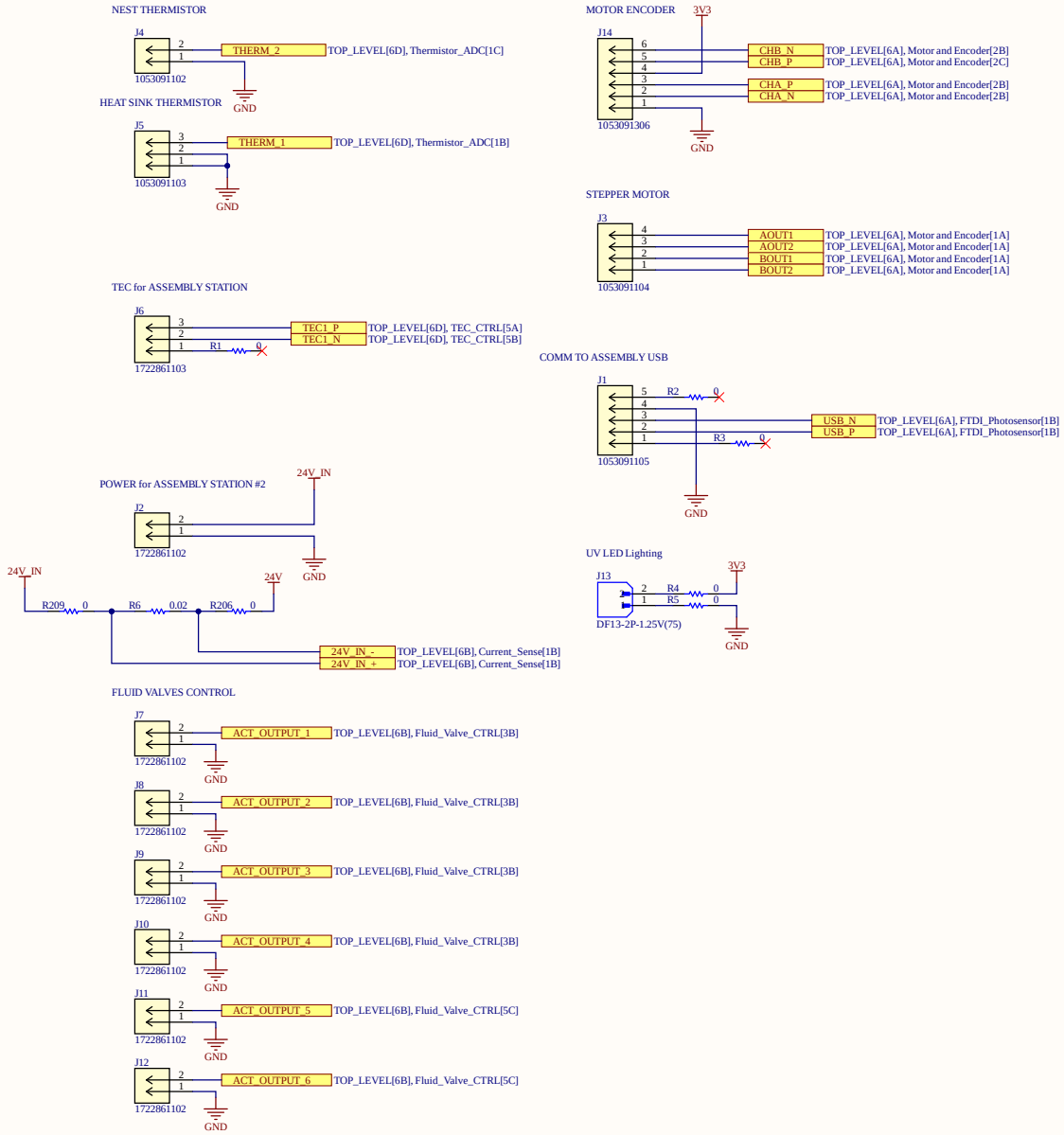

Title			
Size: Tabloid	Number		Revision
Date: 3/02/2026		Sheet of	
File: C:\PCB Projects\..\Connectors.SchDoc		Drawn By:	

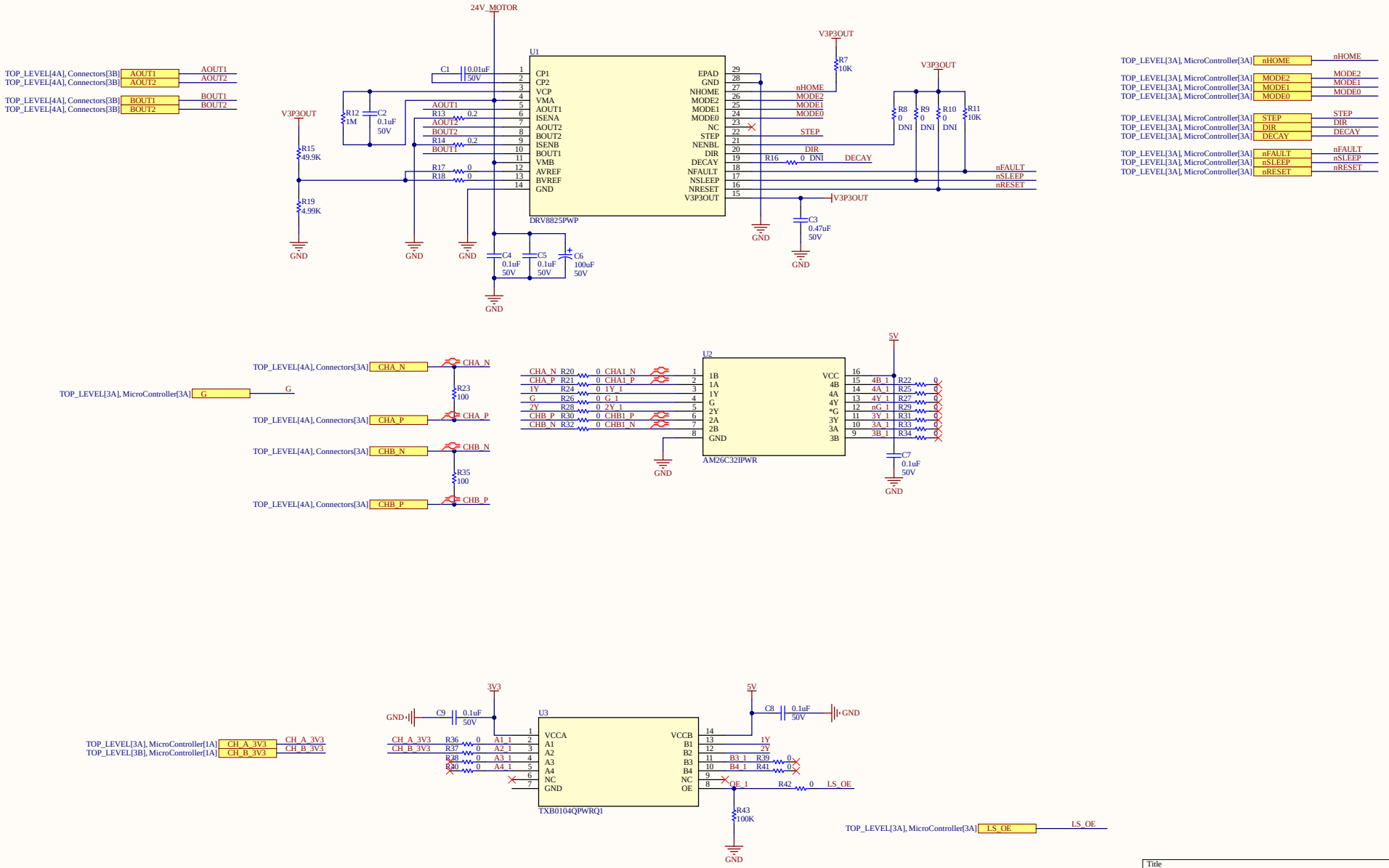

Title		
Size: Tabloid	Number	Revision
Date: 3/02/2026	Sheet of	
File: C:\PCB Projects\..\Motor and Encoder.SchDoc	Drawn By:	

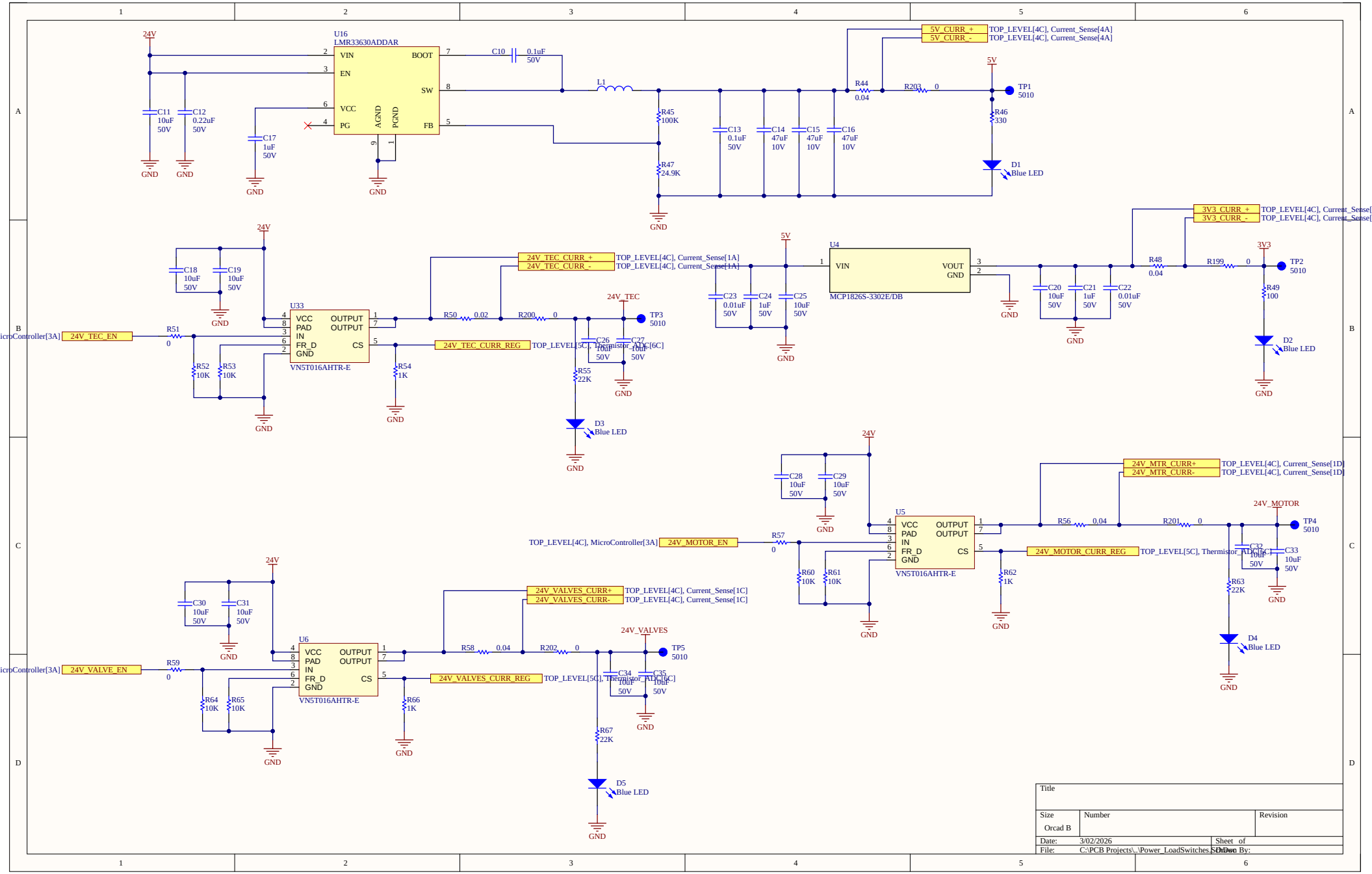
U16
LMR33630ADDAR
VIN
EN
VCC
PG
AGND
PGND
BOOT
SW
FB
24V
C11 10uF 50V
C12 0.22uF 50V
C17 1uF 50V
C10 0.1uF 50V
L1
R45 100K
R47 24.9K
C13 0.1uF 50V
C14 47uF 10V
C15 47uF 10V
C16 47uF 10V
R44 0.04
R203 0
5V
TP1 5010
R46 330
D1 Blue LED
5V_CURR_+
5V_CURR_-
TOP_LEVEL[4C], Current_Sense[4A]
GND
U33
VN5T016AHTR-E
VCC
PAD
IN
FR_D
GND
OUTPUT
CS
24V_TEC_EN
TOP_LEVEL[4C], MicroController[3A]
R51 0
R52 10K
R53 10K
R54 1K
R50 0.02
R200 0
24V_TEC_CURR_+
24V_TEC_CURR_-
TOP_LEVEL[4C], Current_Sense[1A]
24V_TEC_CURR_REG
TOP_LEVEL[5C], Thermistor_ADC[6C]
C18 10uF 50V
C19 10uF 50V
C26 10uF 50V
C27 10uF 50V
R55 22K
D3 Blue LED
24V_TEC
TP3 5010
U4
MCP1826S-3302E/DB
VIN
VOUT
GND
C23 0.01uF 50V
C24 1uF 50V
C25 10uF 50V
C20 10uF 50V
C21 1uF 50V
C22 0.01uF 50V
R48 0.04
R199 0
3V3
TP2 5010
R49 100
D2 Blue LED
3V3_CURR_+
3V3_CURR_-
U5
VN5T016AHTR-E
VCC
PAD
IN
FR_D
GND
OUTPUT
CS
24V_MOTOR_EN
TOP_LEVEL[4C], MicroController[3A]
R57 0
R60 10K
R61 10K
R62 1K
C28 10uF 50V
C29 10uF 50V
R56 0.04
R201 0
24V_MOTOR
TP4 5010
24V_MTR_CURR+
24V_MTR_CURR-
TOP_LEVEL[4C], Current_Sense[1D]
24V_MOTOR_CURR_REG
TOP_LEVEL[5C], Thermistor_ADC[6C]
C32 10uF 50V
C33 10uF 50V
R63 22K
D4 Blue LED
U6
VN5T016AHTR-E
VCC
PAD
IN
FR_D
GND
OUTPUT
CS
24V_VALVE_EN
TOP_LEVEL[4C], MicroController[3A]
R59 0
R64 10K
R65 10K
R66 1K
R58 0.04
R202 0
24V_VALVES
TP5 5010
24V_VALVES_CURR+
24V_VALVES_CURR-
TOP_LEVEL[4C], Current_Sense[1C]
24V_VALVES_CURR_REG
TOP_LEVEL[5C], Thermistor_ADC[6C]
C30 10uF 50V
C31 10uF 50V
C34 10uF 50V
C35 10uF 50V
R67 22K
D5 Blue LED
Title
Size
Orcad B
Number
Revision
Date: 3/02/2026
Sheet of
File: C:\PCB Projects\..\Power_LoadSwitches.SchDoc
Drawn By:

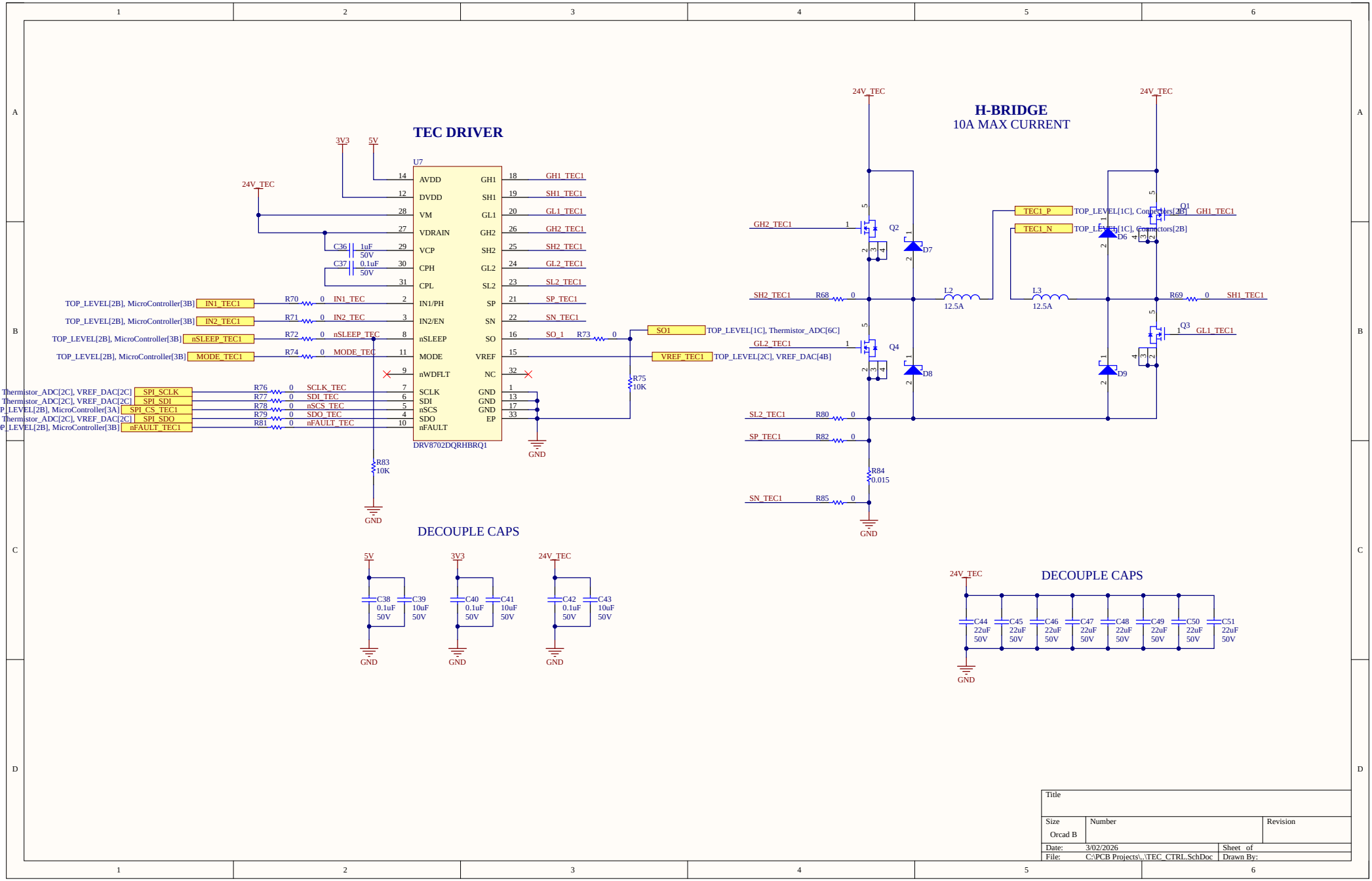

Title		
Size Orcad B	Number	Revision
Date: 3/02/2026		Sheet of
File: C:\PCB Projects\..\TEC_CTRL.SchDoc		Drawn By:

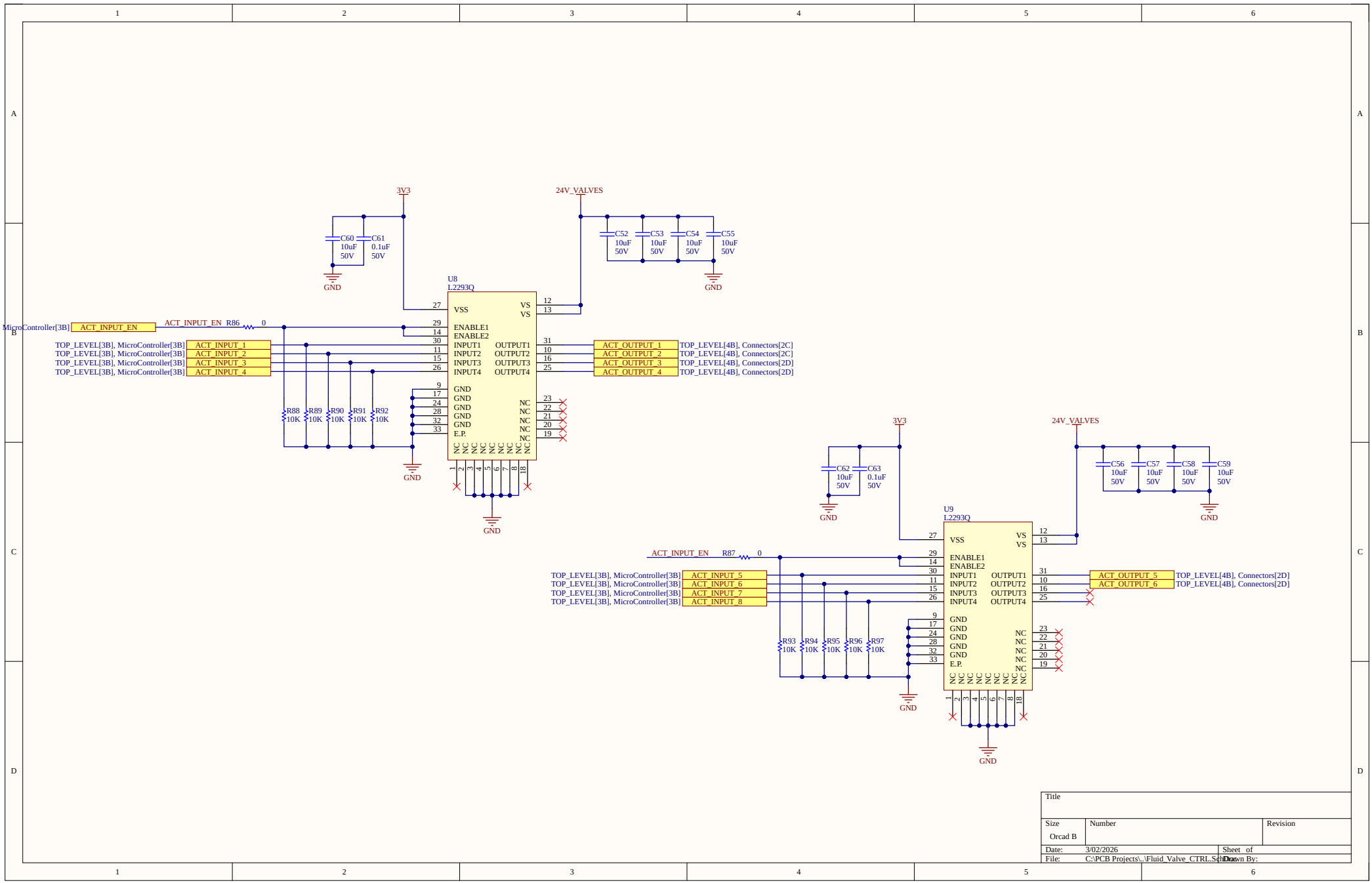
3V3
24V_VALVES
C60 10uF 50V
C61 0.1uF 50V
C52 10uF 50V
C53 10uF 50V
C54 10uF 50V
C55 10uF 50V
GND
U8
L2293Q
VSS
VS
VS
ENABLE1
ENABLE2
INPUT1
INPUT2
INPUT3
INPUT4
OUTPUT1
OUTPUT2
OUTPUT3
OUTPUT4
GND
E.P.
NC
ACT_INPUT_EN
ACT_INPUT_EN_R86
0
TOP_LEVEL[3B], MicroController[3B]
ACT_INPUT_1
ACT_INPUT_2
ACT_INPUT_3
ACT_INPUT_4
R88 10K
R89 10K
R90 10K
R91 10K
R92 10K
ACT_OUTPUT_1
ACT_OUTPUT_2
ACT_OUTPUT_3
ACT_OUTPUT_4
TOP_LEVEL[4B], Connectors[2C]
TOP_LEVEL[4B], Connectors[2D]
C62 10uF 50V
C63 0.1uF 50V
C56 10uF 50V
C57 10uF 50V
C58 10uF 50V
C59 10uF 50V
U9
L2293Q
ACT_INPUT_EN
R87
0
ACT_INPUT_5
ACT_INPUT_6
ACT_INPUT_7
ACT_INPUT_8
R93 10K
R94 10K
R95 10K
R96 10K
R97 10K
ACT_OUTPUT_5
ACT_OUTPUT_6
Title
Size
Orcad B
Number
Revision
Date: 3/02/2026
Sheet of
File: C:\PCB Projects\..\Fluid_Valve_CTRL.Sch
Drawn By:

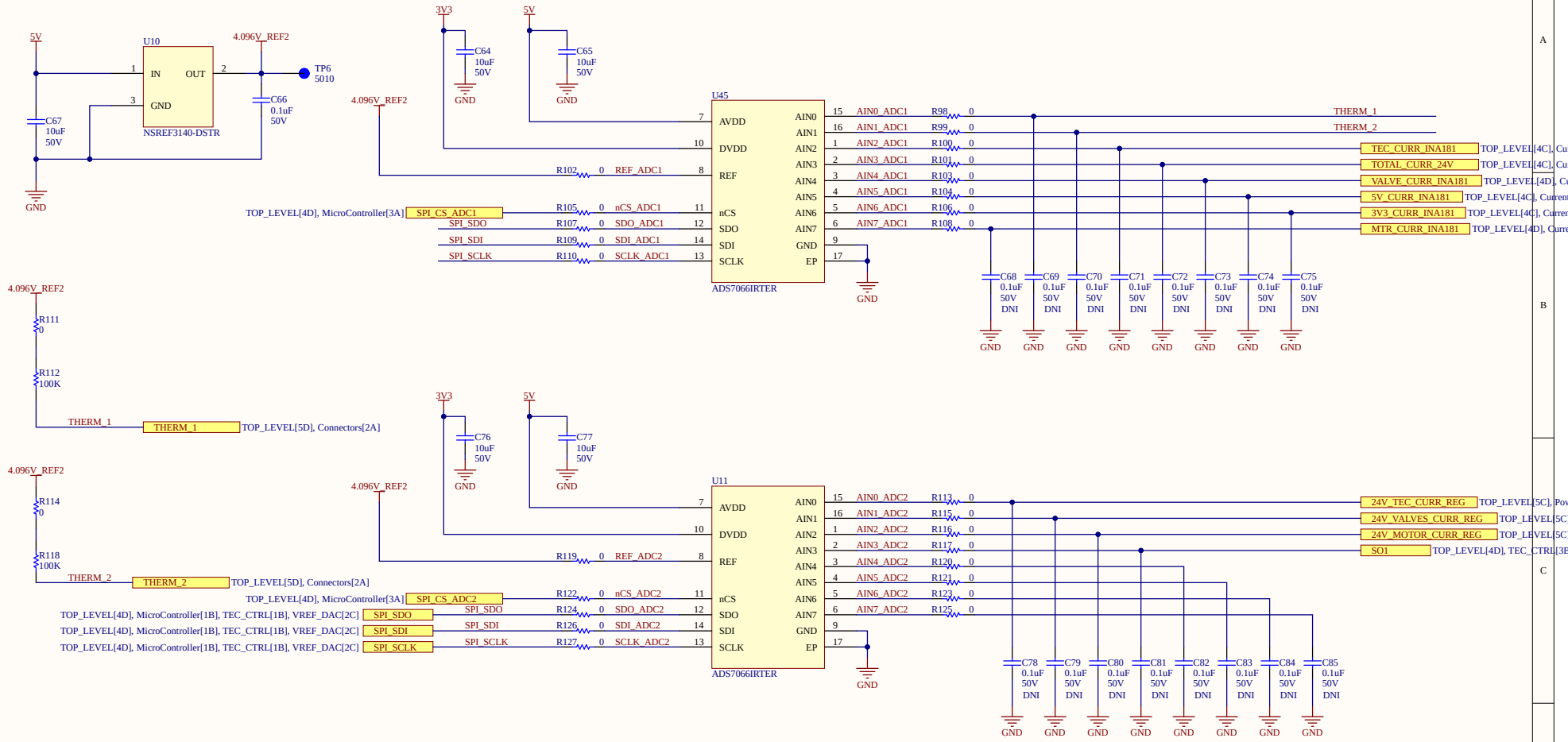

Title		
Size: Orcad B	Number	Revision
Date: 3/02/2026	Sheet of	
File: C:\PCB Projects\..\Thermistor_ADC.SchDoc	Drawn By:	

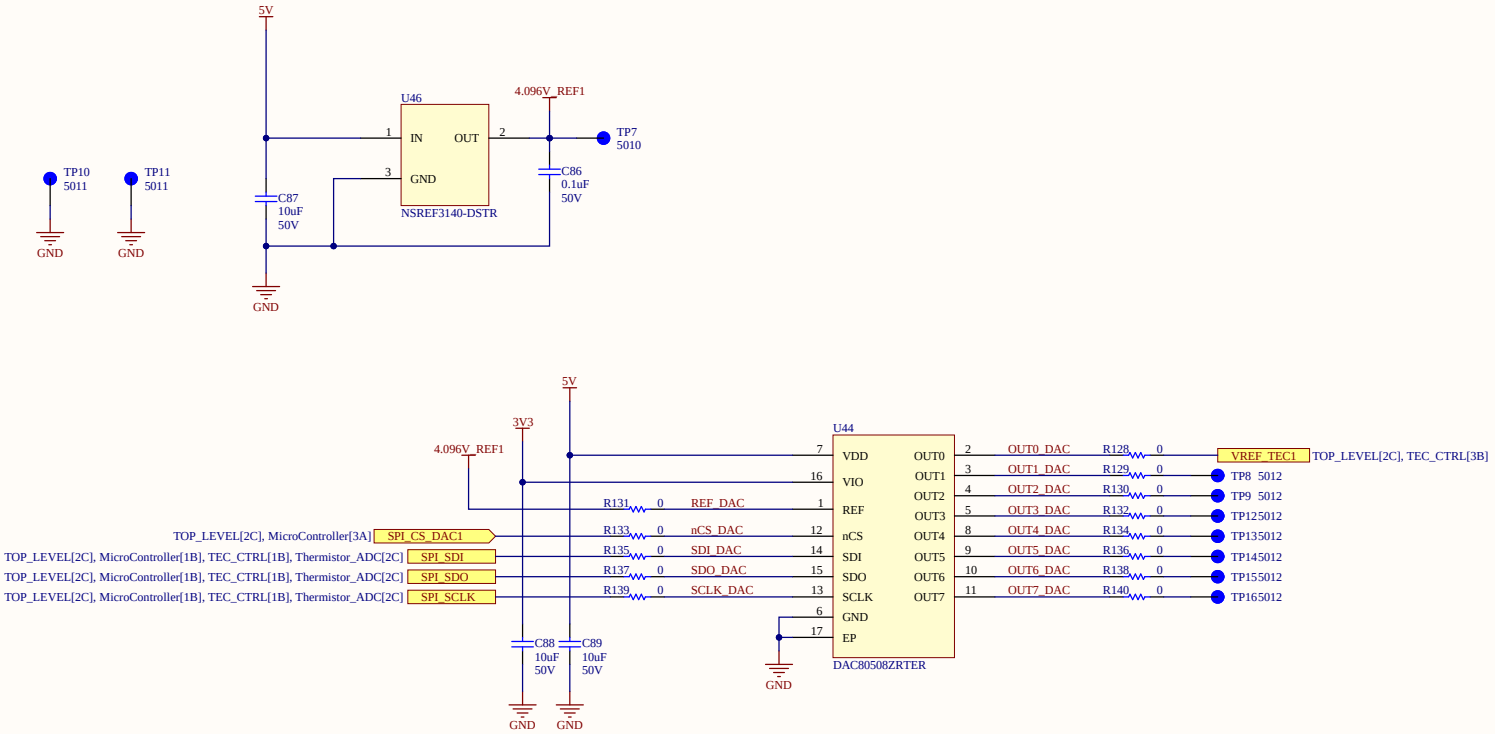

Title		
Size: Orcad B	Number	Revision
Date: 3/02/2026		Sheet of
File: C:\PCB Projects\..\VREF_DAC.SchDoc		Drawn By:

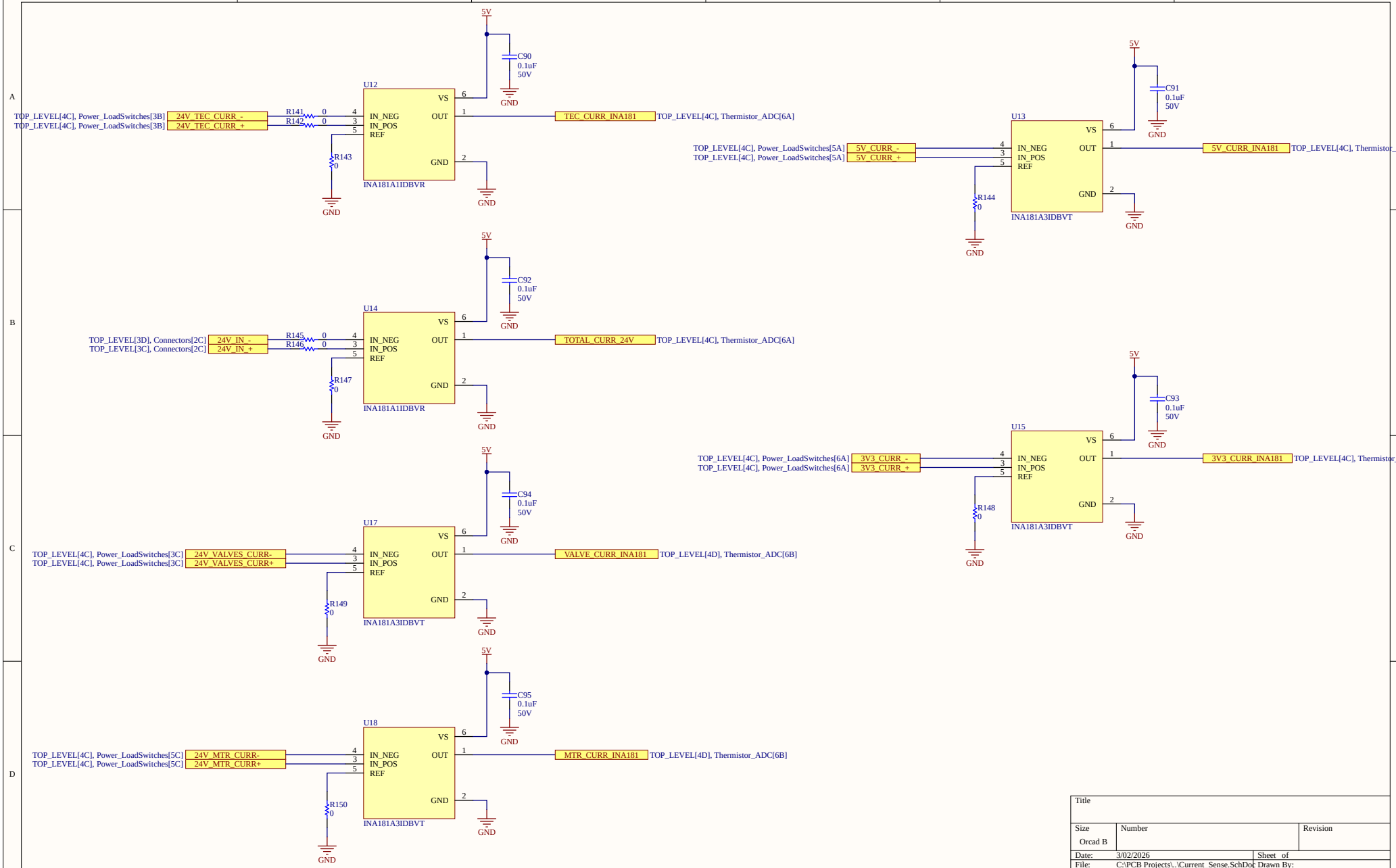
U12
INA181A1IDBVR
TOP_LEVEL[4C], Power_LoadSwitches[3B] 24V_TEC_CURR_-
TOP_LEVEL[4C], Power_LoadSwitches[3B] 24V_TEC_CURR_+
R141 0
R142 0
R143 0
C90 0.1uF 50V
TEC_CURR_INA181
TOP_LEVEL[4C], Thermistor_ADC[6A]
U13
INA181A3IDBVT
TOP_LEVEL[4C], Power_LoadSwitches[5A] 5V_CURR_-
TOP_LEVEL[4C], Power_LoadSwitches[5A] 5V_CURR_+
R144 0
C91 0.1uF 50V
5V_CURR_INA181
U14
INA181A1IDBVR
TOP_LEVEL[3D], Connectors[2C] 24V_IN_-
TOP_LEVEL[3C], Connectors[2C] 24V_IN_+
R145 0
R146 0
R147 0
C92 0.1uF 50V
TOTAL_CURR_24V
TOP_LEVEL[4C], Thermistor_ADC[6A]
U15
INA181A3IDBVT
TOP_LEVEL[4C], Power_LoadSwitches[6A] 3V3_CURR_-
TOP_LEVEL[4C], Power_LoadSwitches[6A] 3V3_CURR_+
R148 0
C93 0.1uF 50V
3V3_CURR_INA181
U17
INA181A3IDBVT
TOP_LEVEL[4C], Power_LoadSwitches[3C] 24V_VALVES_CURR-
TOP_LEVEL[4C], Power_LoadSwitches[3C] 24V_VALVES_CURR+
R149 0
C94 0.1uF 50V
VALVE_CURR_INA181
TOP_LEVEL[4D], Thermistor_ADC[6B]
U18
INA181A3IDBVT
TOP_LEVEL[4C], Power_LoadSwitches[5C] 24V_MTR_CURR-
TOP_LEVEL[4C], Power_LoadSwitches[5C] 24V_MTR_CURR+
R150 0
C95 0.1uF 50V
MTR_CURR_INA181
TOP_LEVEL[4D], Thermistor_ADC[6B]
5V
GND
IN_NEG
IN_POS
REF
VS
OUT
Title
Size
Orcad B
Number
Revision
Date: 3/02/2026
Sheet of
File: C:\PCB Projects\..\Current_Sense.SchDoc
Drawn By:

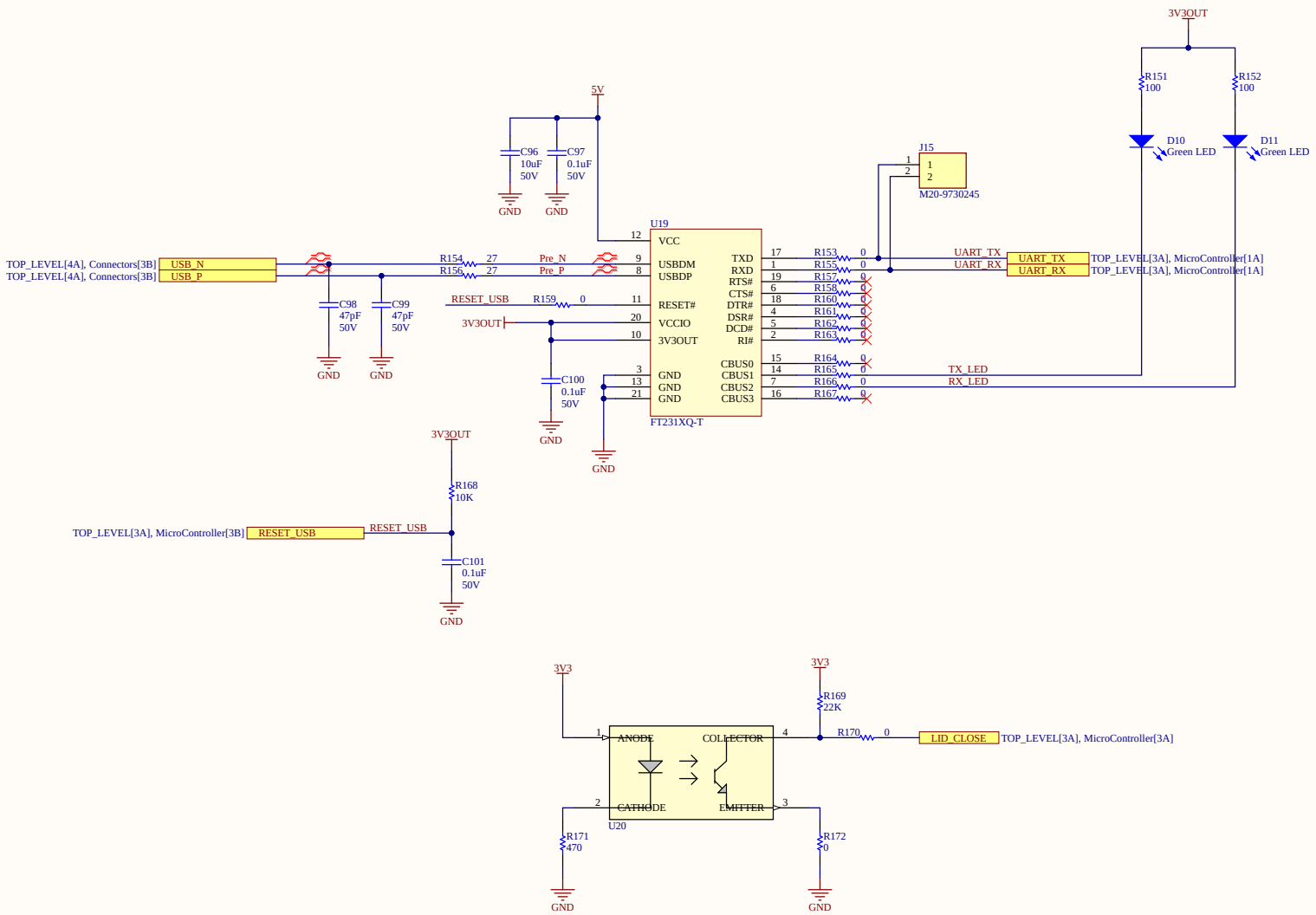

Title		
Size Orcad B	Number	Revision
Date: 3/02/2026	Sheet of	
File: C:\PCB Projects\..\FTDI_Photosensor.Schdoc	Drawn By:	

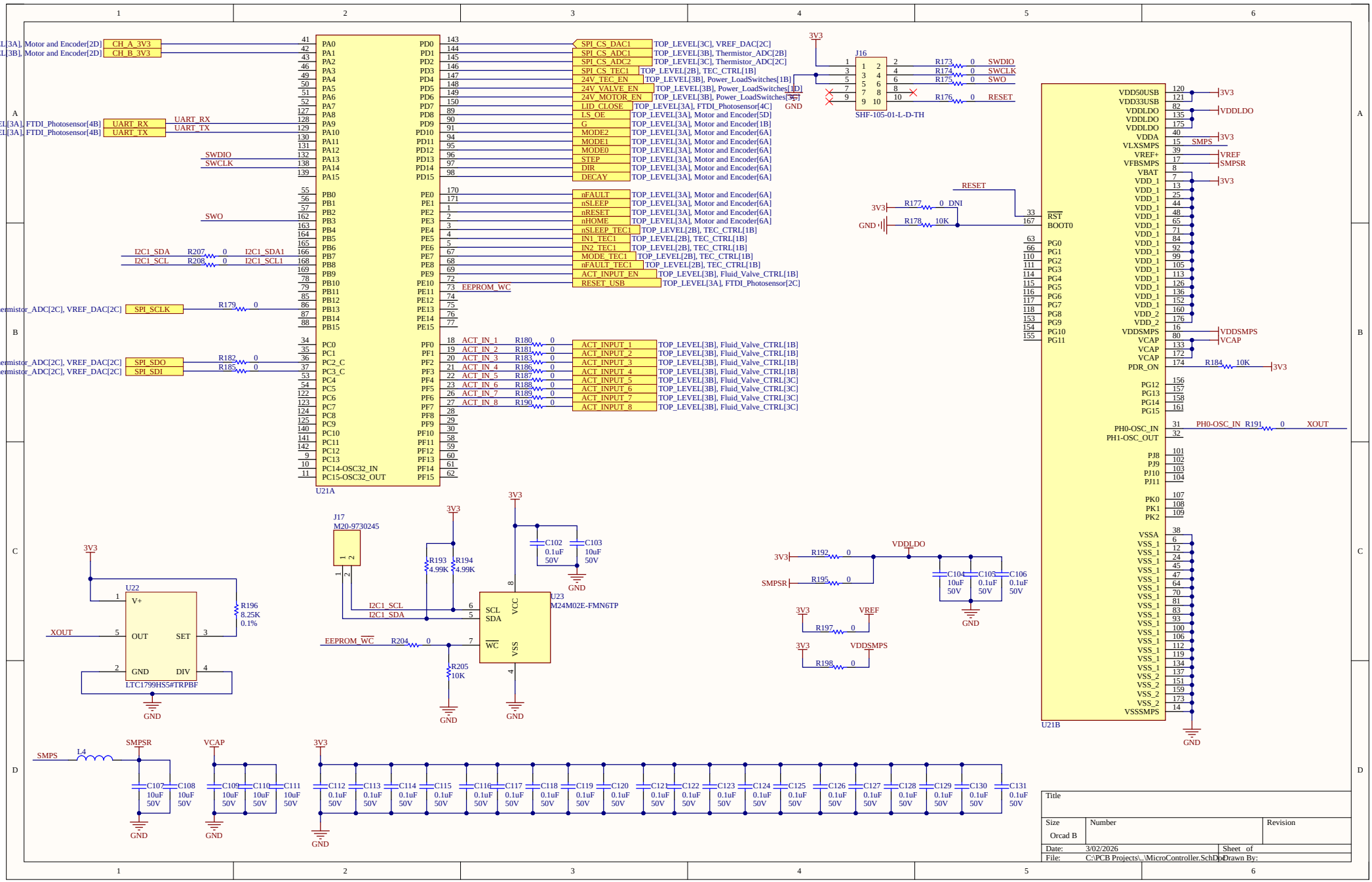

Title

Size	Number	Revision
Orcad B		

Date: 3/02/2026 Sheet of

File: C:\PCB Projects\..\MicroController.SchDoc Drawn By:

Component	Description	Designator	Footprint	LCSC	Quantity
0402WF5104EJLF	CHIP RESISTOR-SMD 0.5W 100kΩ	R1, C22, C28	0805_L2.0W_W1.25W_H0.65	0402WF5104EJLF	3
0402WF5104EJLF	CHIP RESISTOR-SMD 0.5W 100kΩ	C8, C9, C10, C11, C6, C7, C12, C13, C17, C18, C30, C32, C33, C35, C36, C38, C82, C85, C90, C92, C93, C96, C98, C99, C102, C105, C106, C107, C108, C109, C111, C113, C114, C115, C116, C117, C119, C120, C121, C122, C123, C124, C125, C126, C127, C128, C129, C130, C131	0805_L2.0W_W1.25W_H0.65	0402WF5104EJLF	48
0R0402BF0-4C5B0B0	CHIP SMD-0.01JF 5% 4C5B0B0	R3	0402_L1.0W_W0.5W_H0.35	0R0402BF0-4C5B0B0	1
1MT0402BWL1200	CHIP MLCC-100UF 20% 1MT0402	C4	0402_L1.0W_W0.5W_H0.35	1MT0402BWL1200	1
0R0402BF0-4C6B0B0	CHIP SMD-0.01JF 5% 4C6B0B0	C1, C2, C3, C5, C20, C23, C24, C25, C26, C27, C29, C31, C34, C37, C39, C40, C41, C42, C43, C44, C45, C46, C47, C48, C49, C50, C51, C52, C53, C54, C55, C56, C57, C58, C59, C60, C61, C62, C63, C64, C65, C66, C67, C68, C69, C70, C71, C87, C88, C89, C91, C103, C104, C110, C112, C118, C133	0805_L2.0W_W1.25W_H0.65	0R0402BF0-4C6B0B0	64
1M0402A0WW0K2V	CHIP SMD-0.01JF 5% 1M0402A0	C14	0402_L1.0W_W0.5W_H0.35	1M0402A0WW0K2V	1
0R0402BF0-4C5B0B0	CHIP SMD-0.01JF 5% 4C5B0B0	C44, C51, C64	0402_L1.0W_W0.5W_H0.35	0R0402BF0-4C5B0B0	3
0.1U0402BP0W4K0	CHIP SMD-0.1JF 50V 0.1U0402	C17, C21, C31, C38	0402_L1.0W_W0.5W_H0.35	0.1U0402BP0W4K0	4
0402CG7R0C500NT0	CHIP SMD-0.01JF 5% 0402CG7	C54, C55, C56, C57	0402_L1.0W_W0.5W_H0.35	0402CG7R0C500NT0	4
33U	CHIP SMD-0.1JF 50V 0TR0G0G	C58, C59, C60, C61, C62, C63, C65, C66, C67, C68, C69, C70, C71, C72, C73, C74, C75, C76, C77, C78, C79, C80, C81, C82, C83, C84, C85, C86, C87, C88, C89, C90, C91, C92, C93, C94, C95, C96, C97, C98, C99, C100, C101, C102, C103, C104, C105, C106, C107, C108, C109, C110, C111	0402_L1.0W_W0.5W_H0.35	0402CG330J500NT0	111
1M0402A0WW0K2V	CHIP SMD-0.01JF 5% 1M0402A0	C15	0402_L1.0W_W0.5W_H0.35	1M0402A0WW0K2V	1
0R0402BF0-4C5B0B0	CHIP SMD-0.01JF 5% 4C5B0B0	C41, C53, C95