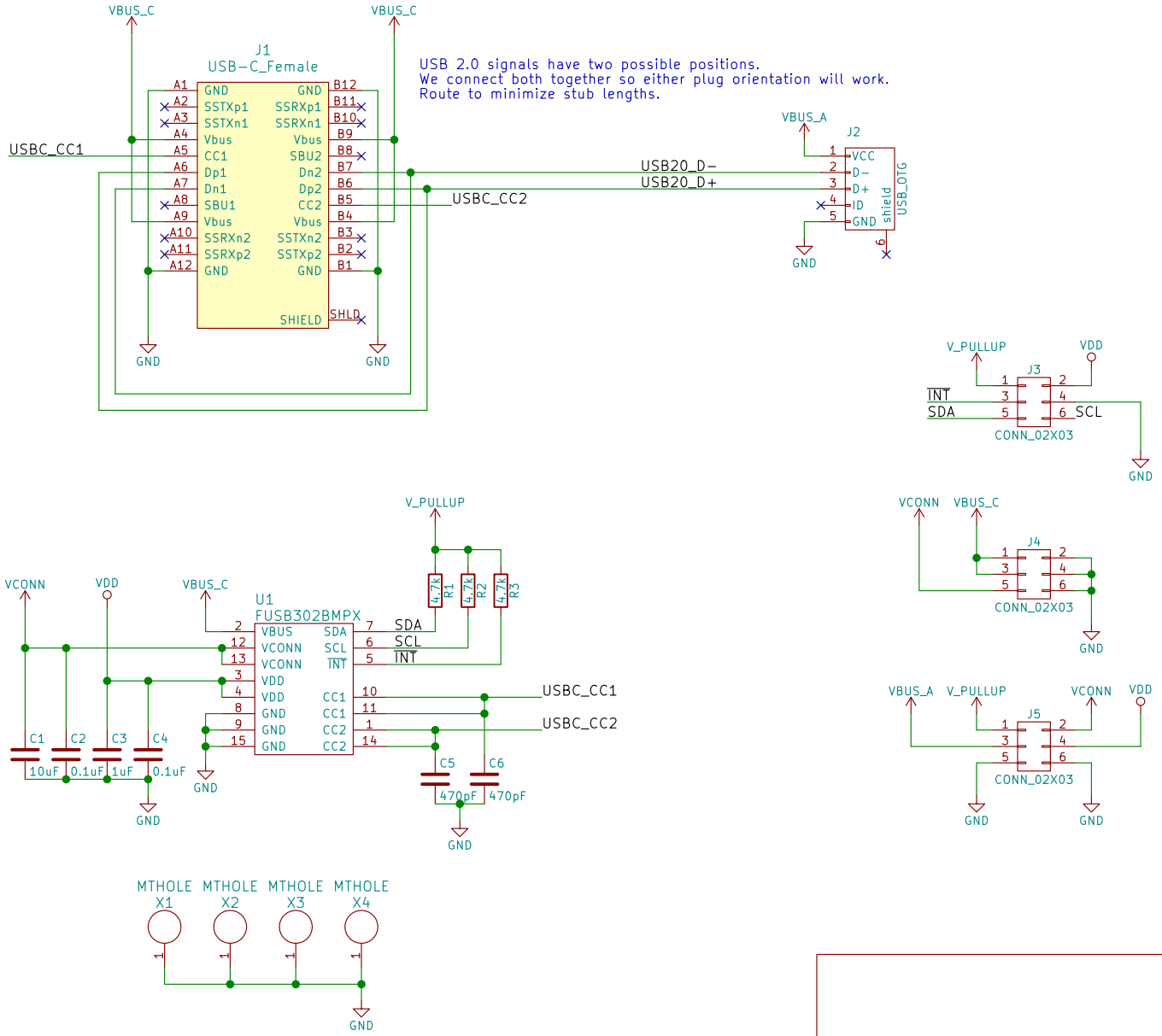


**Reclaimer Labs LLC**

Sheet: /

File: USB-PD-Breakout.sch

***Title: USB PD Breakout***

| | | |
|---|---|---|
| Size: USLetter | Date: 2017-01-10 | **Rev: 2** |
| KiCad E.D.A. kicad 4.0.6 | | Id: 1/1 |