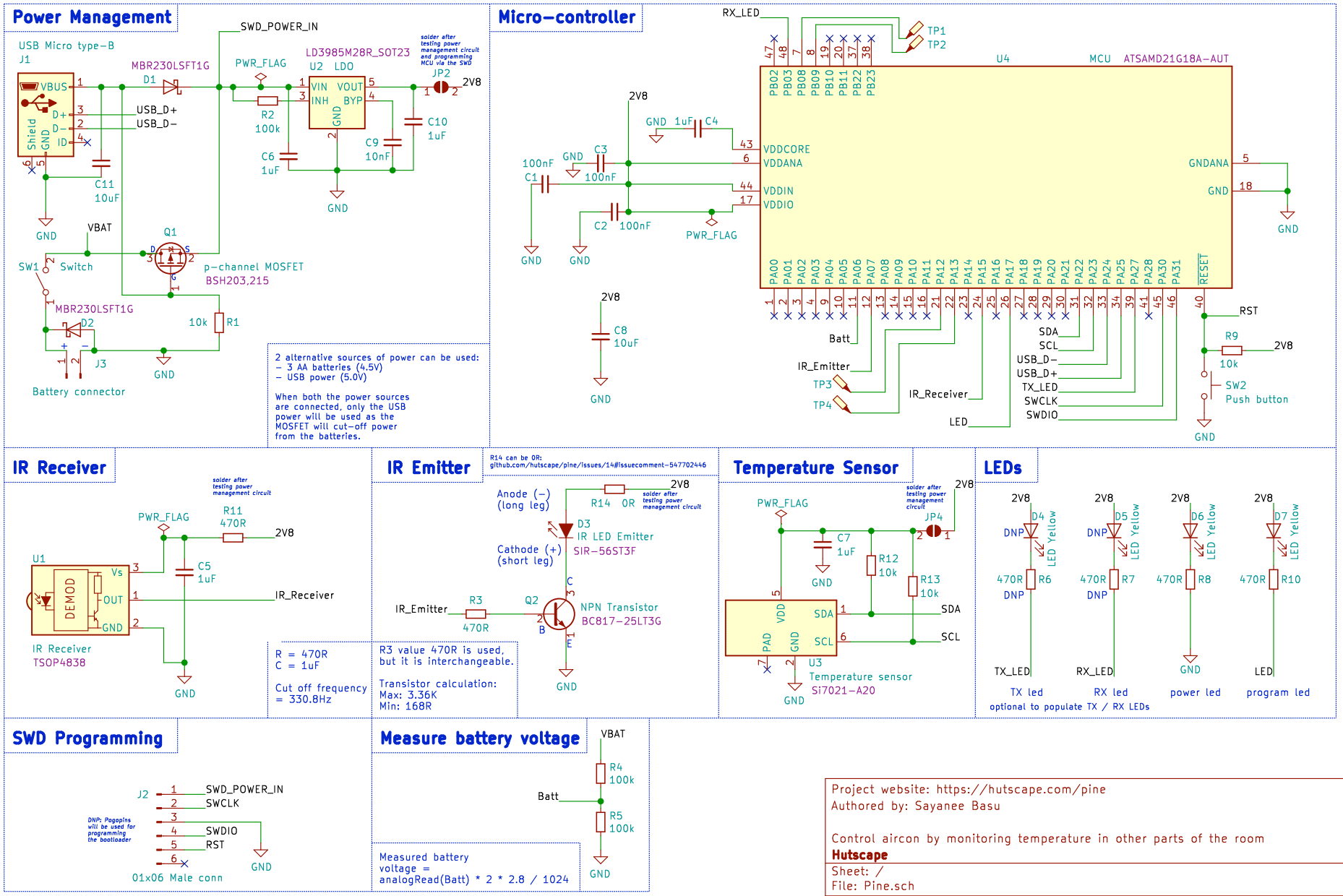

Project website: https://hutscape.com/pine
Authored by: Sayanee Basu

Control aircon by monitoring temperature in other parts of the room

Hutscape

Sheet: /
File: Pine.sch

Title: Pine

Size: A4	Date: 2019-10-30	**Rev: V1.0**
KiCad E.D.A. kicad (5.1.0-0)		Id: 1/1