POSHA

Electronic Engineering Internship Assignment

ABHISHEK 23/EE/010
DELHI TECHNOLOGICAL UNIVERSITY

Problem statment

The goal is to build a system that can accurately measure how much food is being dispensed into a container during operation. The system should work reliably even when there are small disturbances, uneven loading, or noise, just like in real-life conditions. It should be able to capture the measurement data, process it, and provide stable and consistent results. Overall, the focus is on creating a simple, efficient, and practical solution that combines sensing, data processing, and hardware design for accurate and dependable performance.

Load Cell Selection

Here we will be using TAL 220, which is a single point Load cell, used in the kitchen and jewellery industry means more resource available, it works perfectly fine with our other components, can handle off-centre loads, which makes it more accurate, so based on its properties, it will work fine with our things.

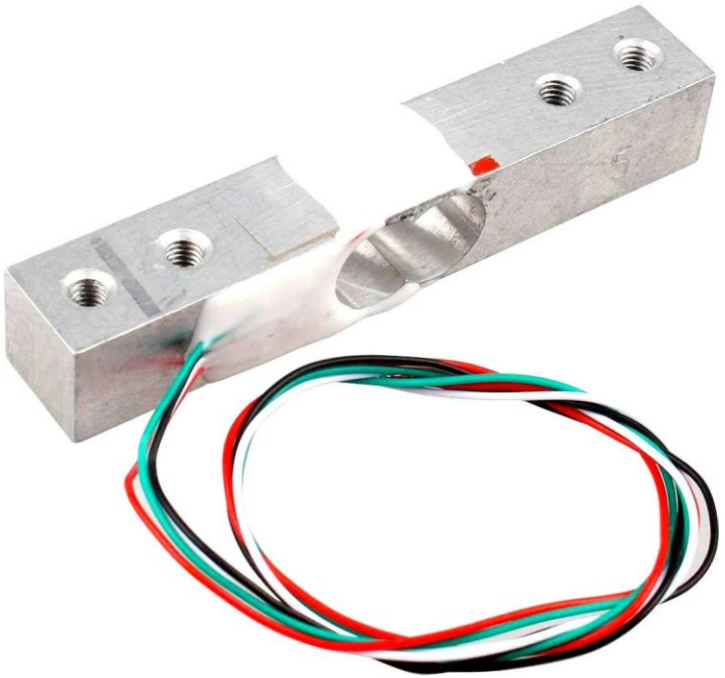

Analog digital converter selection

Here we will be using the HX711 analogue-to-digital converter. It has an in-built amplifier, high resolution (24 bits), can support differential input, and noise filtering support. It is specifically designed for load cells to reduce the complexity and give stable readings.

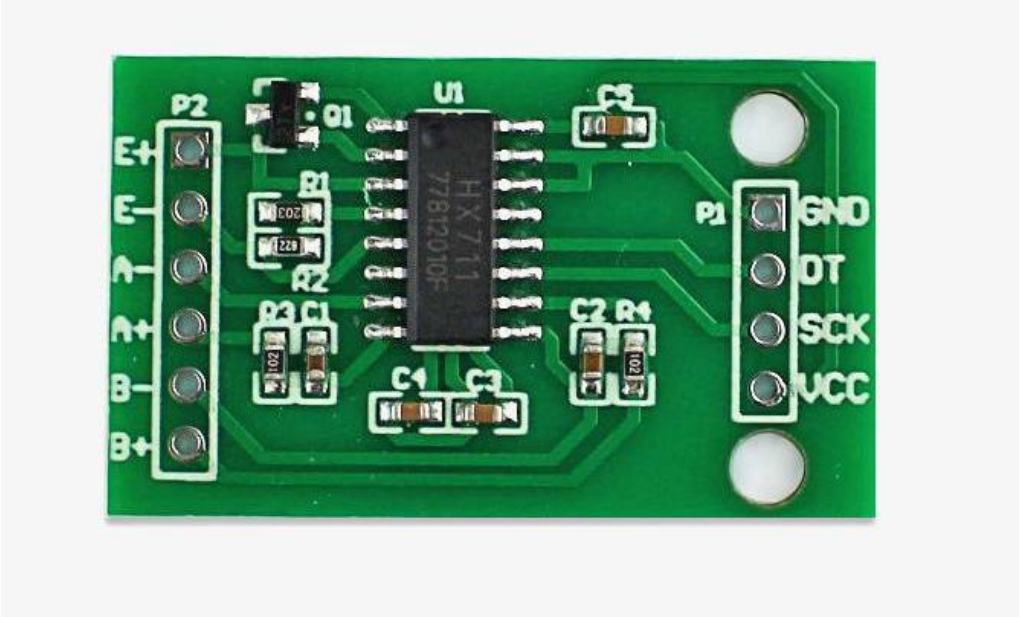

Connector and cables

The load cell is connected using a 4-wire configuration, ensuring proper excitation and signal sensing. Shielded cables and appropriate connectors are considered to reduce noise and improve reliability. Overall, the design ensures accurate, stable, and efficient data acquisition for the system.

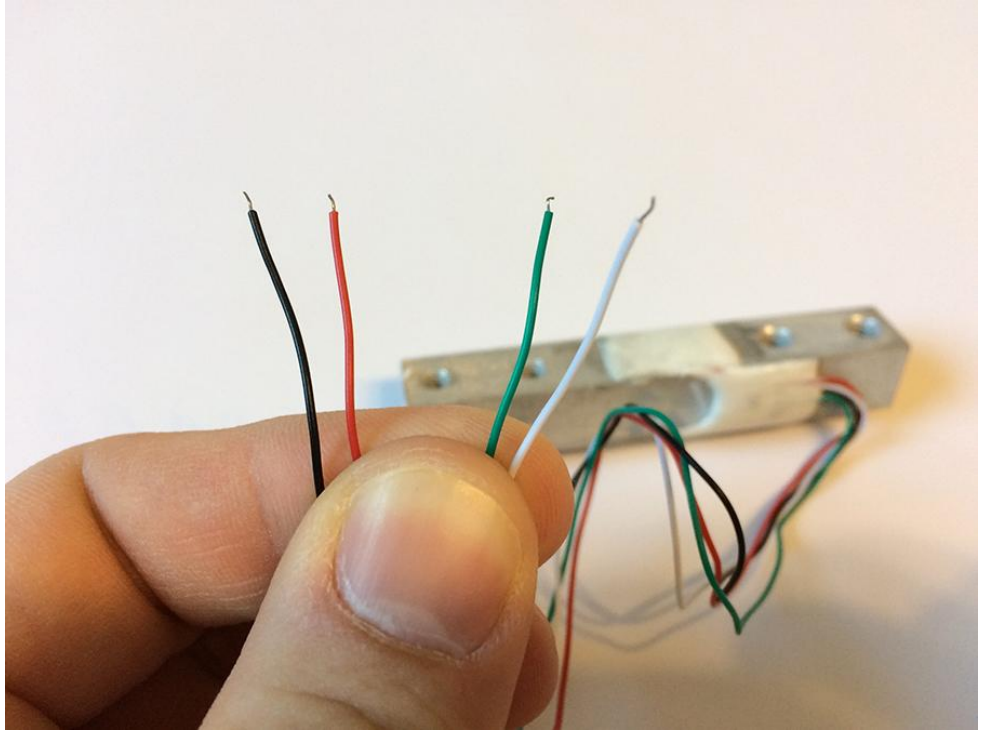

Basic idea of Schematic

The load cell measures weight and produces a small analog signal, which is amplified and converted into digital form by the ADC. This data is then sent to the microcontroller (Arduino_nano_ESP32) for processing, while proper power connections and capacitors ensure stable and noise-free operation.

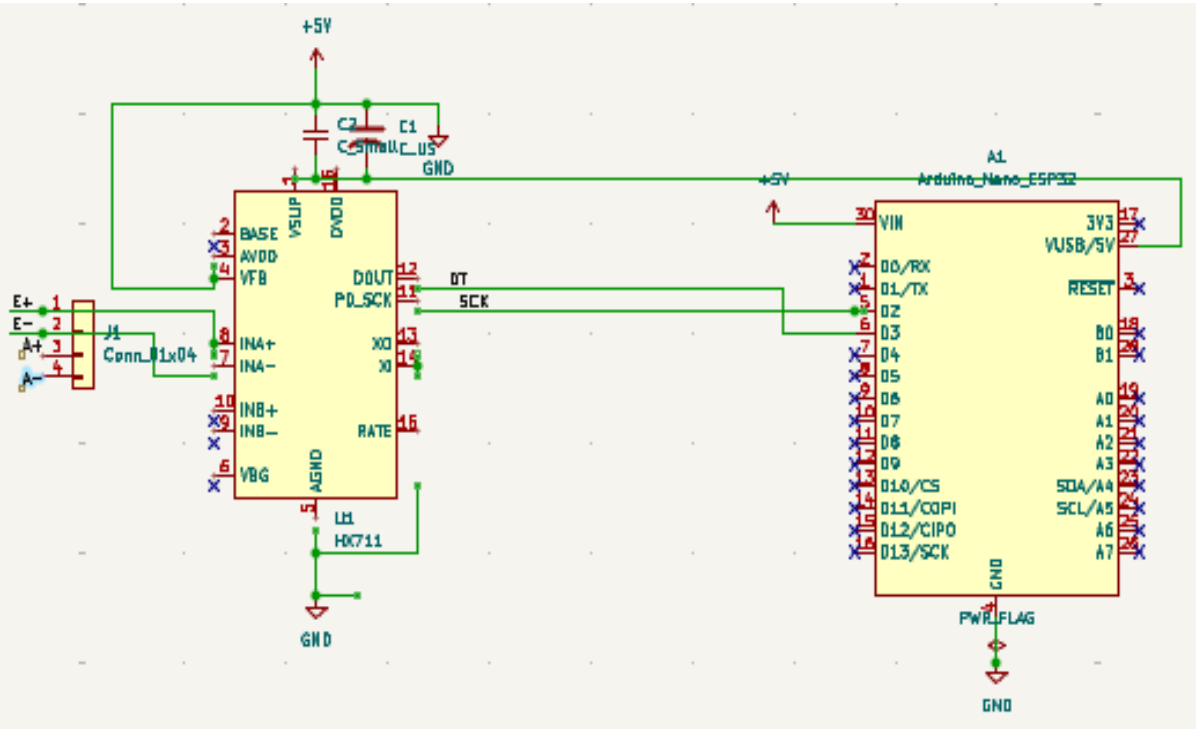

PCB design overview

The PCB is designed with a compact and structured layout, ensuring a clear signal flow from the sensor to the processing unit. The sensor interface is placed close to the data conversion stage to minimise noise and interference in low-level signals. Power and signal traces are routed carefully, with appropriate widths and minimal crossings to improve reliability. Decoupling capacitors are included near critical components to ensure stable operation, resulting in an efficient and noise-resilient design.

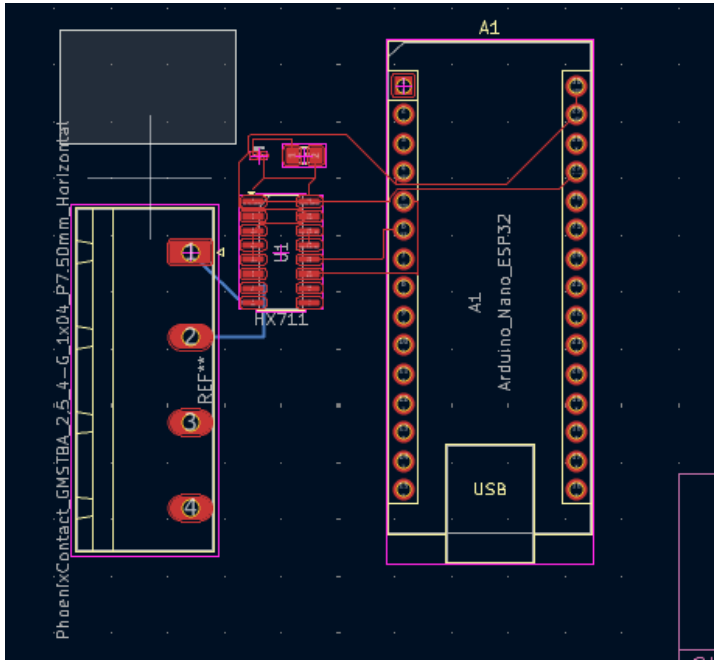

Basic Idea of code

The microcontroller reads digital data from the ADC using two communication pins (DT and SCK). The ADC continuously converts the amplified analog signal from the load cell into digital values, which are then processed by the microcontroller to calculate the weight. Basic filtering and averaging techniques are used to improve measurement stability, and the final output is displayed through the serial monitor or any connected interface.

```
#include "HX711.h"

#define DT  3
#define SCK 2

HX711 scale;

void setup() {
  Serial.begin(9600);
  scale.begin(DT, SCK);
  scale.set_scale(2280.f);
  scale.tare();
}

void loop() {
  float weight = scale.get_units(10);
  Serial.print("Weight: ");
  Serial.println(weight);
  delay(500);
}
```

Conclusion

This project demonstrates a functional prototype for measuring weight in a food dispensing system using sensor interfacing, data conversion, and microcontroller-based processing. While the design may not be fully optimised and could contain minor inaccuracies or simplifications, it successfully addresses the core requirements of the problem statement within the given time constraints. The focus was on building a working and reliable system, and sincere effort has been made to ensure the correct implementation of concepts and practical design considerations.

Thanks for the opportunity

- ABHISHEK