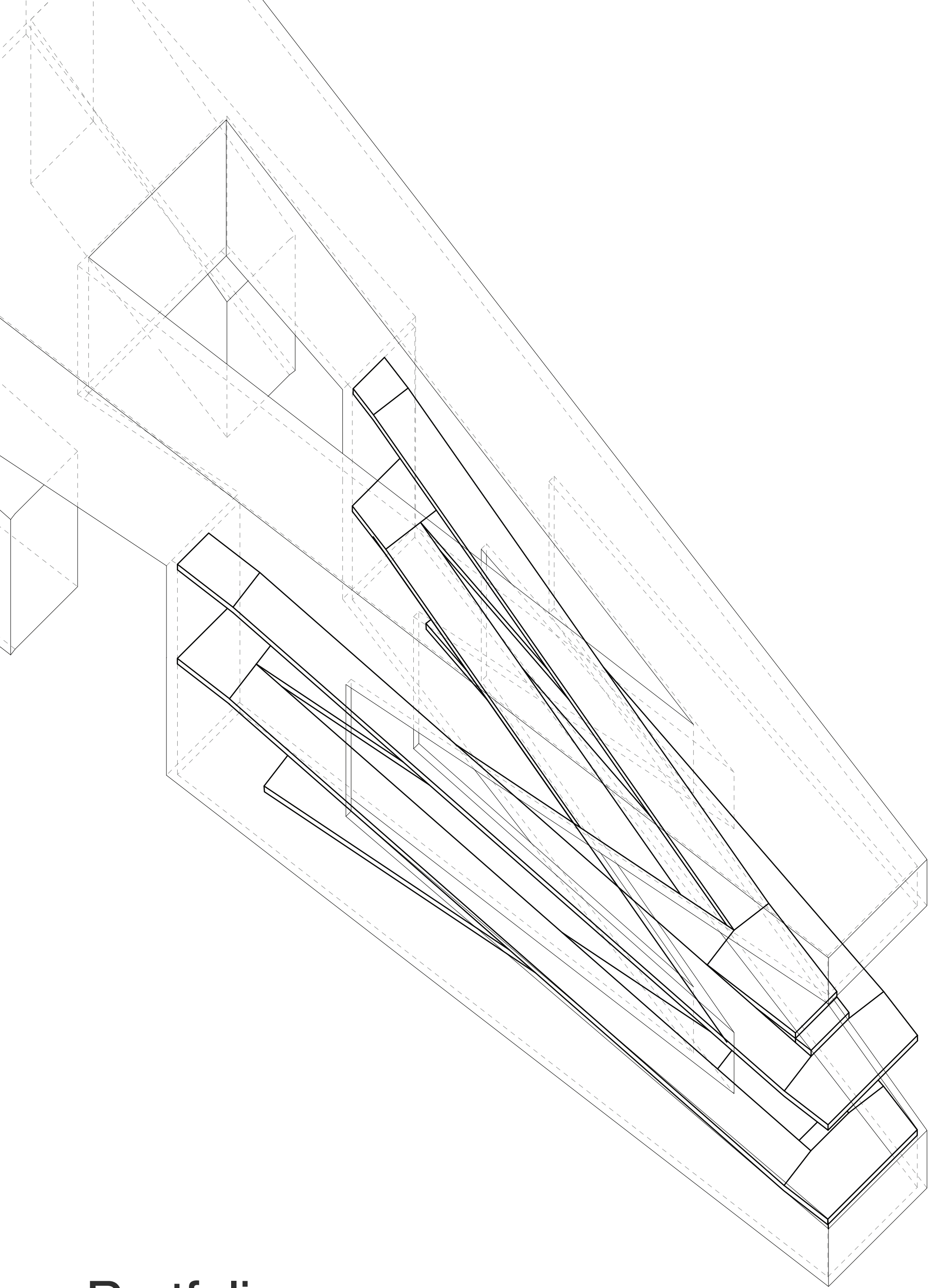

Portfolio

Jaden Atayee

Ahmad Jaden Atayee
Berkeley, CA | P: (619) 972-1217 | Ahmadjatayee@gmail.com

EDUCATION

University of California, Berkeley — Berkeley, CA
Bachelor of Architecture — Expected May 2027

WORK EXPERIENCE

AIAS — Berkeley, CA
Team Lead — Aug 2025 – Present
- Coordinate with practicing architects to fill judge and mentor roles
- MArket and fundraise the event with industry sponsors and local universities
- Lead competition and organize prompt materials

Cal Construction — Berkeley, CA
Design Build Team — Aug 2025 – Present
- Dry run design build skills to improve deliverable quality and speed.
- Plan and prepare for ASC construction competition.

Autodesk — San Francisco, CA
Ambassador — Jun 2025 – Present
- Support classmates with technical resources and guidance.
- Host educational and social events to promote architectural achievement.

CAIS — Berkeley, CA
Architectural Analyst — Aug 2025 – Dec 2025
- Reviewed architectural drawings and models across different platforms to ensure technical standards are met.
- Critique errors in architectural models and drawings for project screening.
- Communicate project requirements and provide guidance to contract architecture consultants.

The Miller Hull Partnership — San Diego, CA
Architectural Intern — May 2023 – Jun 2023
- Collaborated with architects on site analysis, surveys, and project research.
- Completed a comprehensive proposal using Rhino, Revit, and Twin Motion.
- Presented design work to firm-wide teams and received critique from firm principals.
- Actively participated in business strategy meetings, design panels, and OAC meetings.

Build A Miracle — Tijuana, MX
Project Manager — Aug 2022 – Feb 2023
- Managed logistics of the home-building project, including material sourcing, coordination of labor, and oversight of construction.
- Coordinated and hosted fundraising events, raising over twenty-two thousand dollars to build a home for a homeless family, to repair homes, and to provide scholarships to underprivileged students.
- Collaborated with community members, nonprofits, and other organizations to identify families in need of housing.

Rotary International — San Diego, CA
Project Manager — Oct 2021 – Feb 2023
- Collaborated closely with philanthropists to connect with organizations aligned with our mission, values, and goals.
- Led projects aimed at benefiting partner organizations, overseeing project planning, and execution to maximize impact.
- Managed EA between the club and partner organizations, cultivating strong relationships and facilitating communication to support ongoing collaboration.
- Presented partner organizations to club members to secure thousands in funding and support.

Martinez + Cutri Architects — San Diego, CA
Architectural Intern — Jul 2022 – Oct 2022
- Employed CAD skills to develop plans and renderings for various building projects.
- Worked closely with firm partners, incorporating their sketches and conceptual ideas into designs.
- Assisted in the review and refinement of CAD models, using partner feedback to improve design quality.

Doerr Landscape Architecture — San Diego, CA
Landscape Designer — Jan 2022 – Jun 2022
- Collaborated directly with clients to understand design needs and preferences, translating visions into detailed plans.
- Utilized CAD software to create designs, providing clients with a clear visualization of their proposed projects.
- Conducted research on plant options, materials, and landscaping trends, and using data to guide client decisions.
- Held firm-client meetings, fostering collaborative discussions and refining design plans based on client feedback.
-

ADDITIONAL

Technical Skills: Rhino 8, Revit, AutoCAD, Fusion360, Twinmotion, Adobe Creative Suite, MS Office Suite
Languages: Native in English; conversational proficiency in Spanish, Farsi

Jaden Atayee

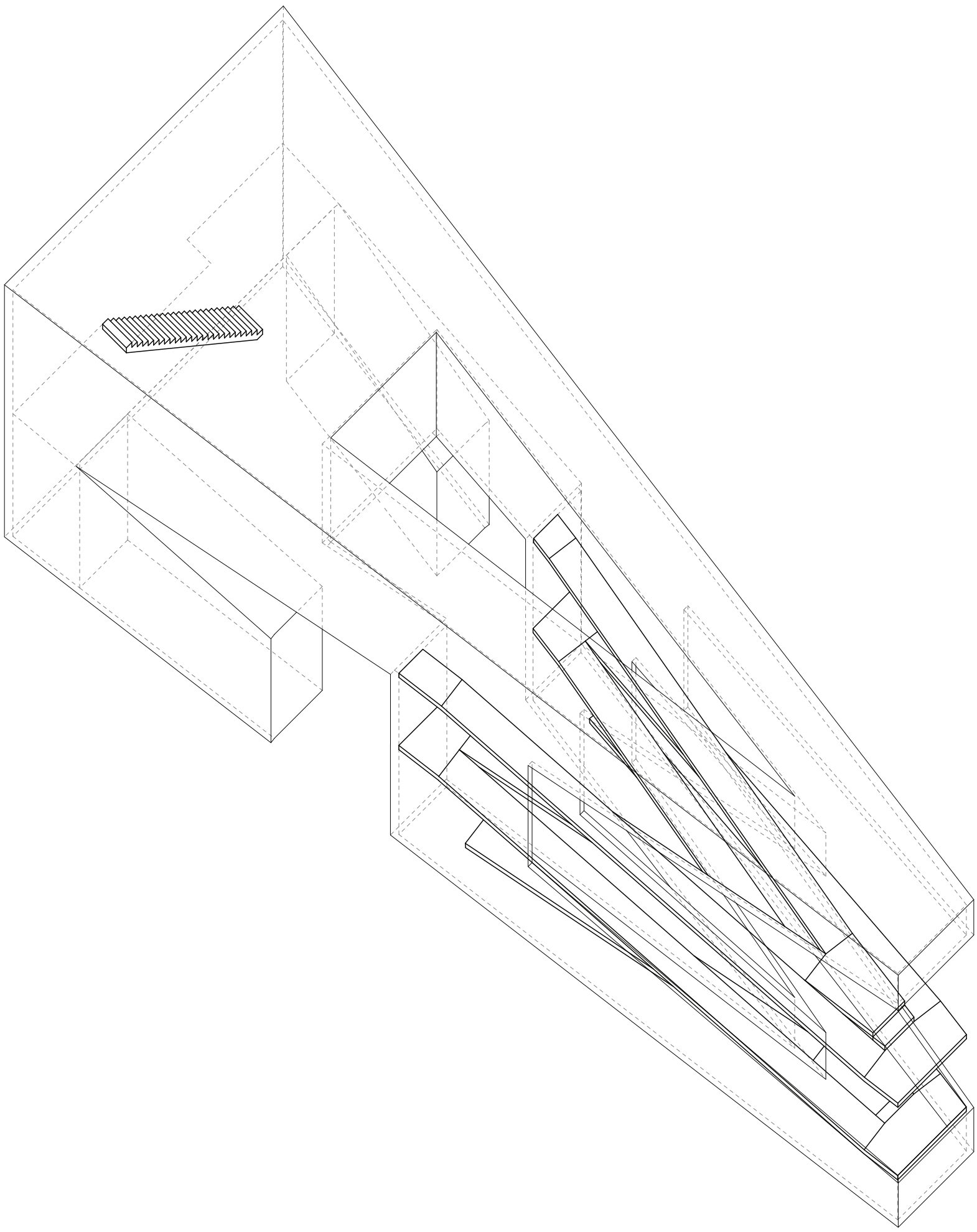

Auditorium-
This project is an exploration of access and vertical circulation. A void is used to respond to the site while another exposes the primary vertical circulation. The ramps are a compliance with ADA but are also a challenge to circulatory ideals.

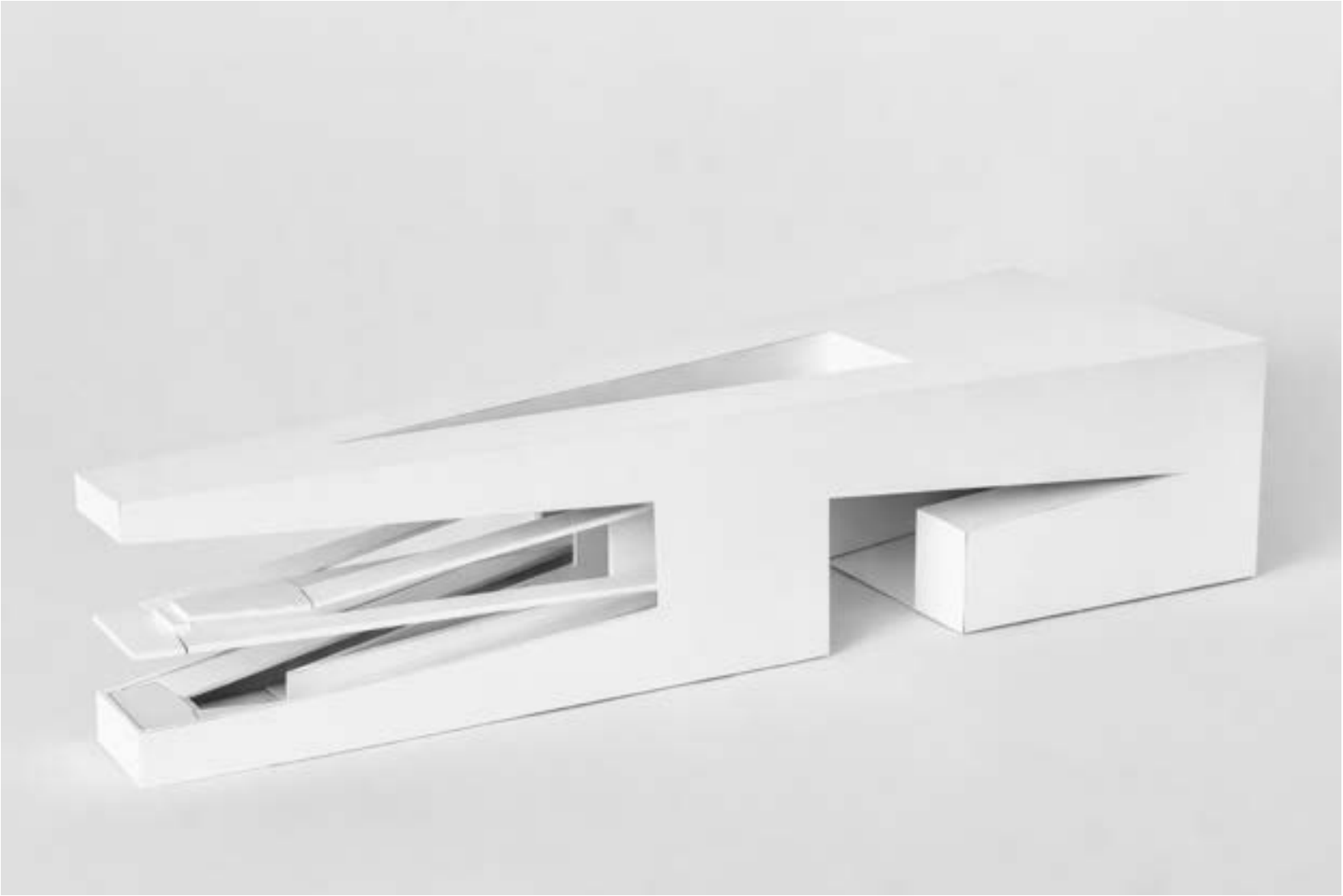

Jaden Atayee

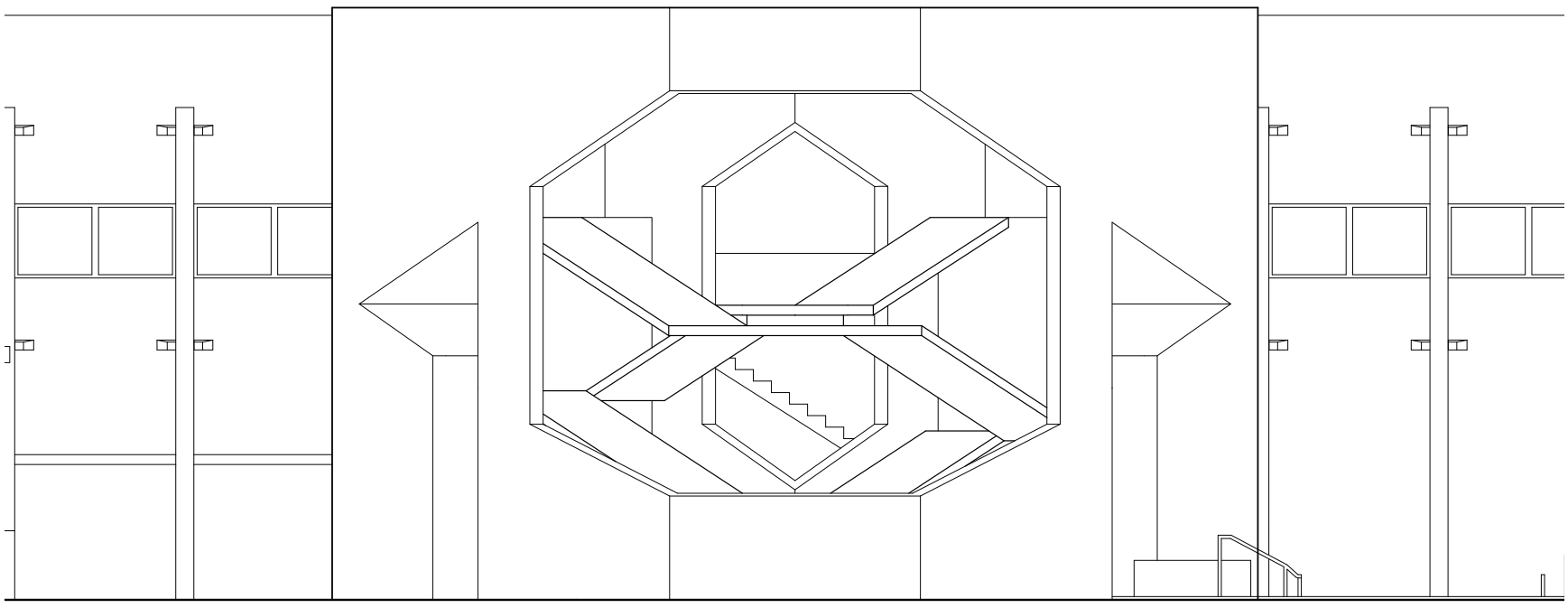

Elevation A

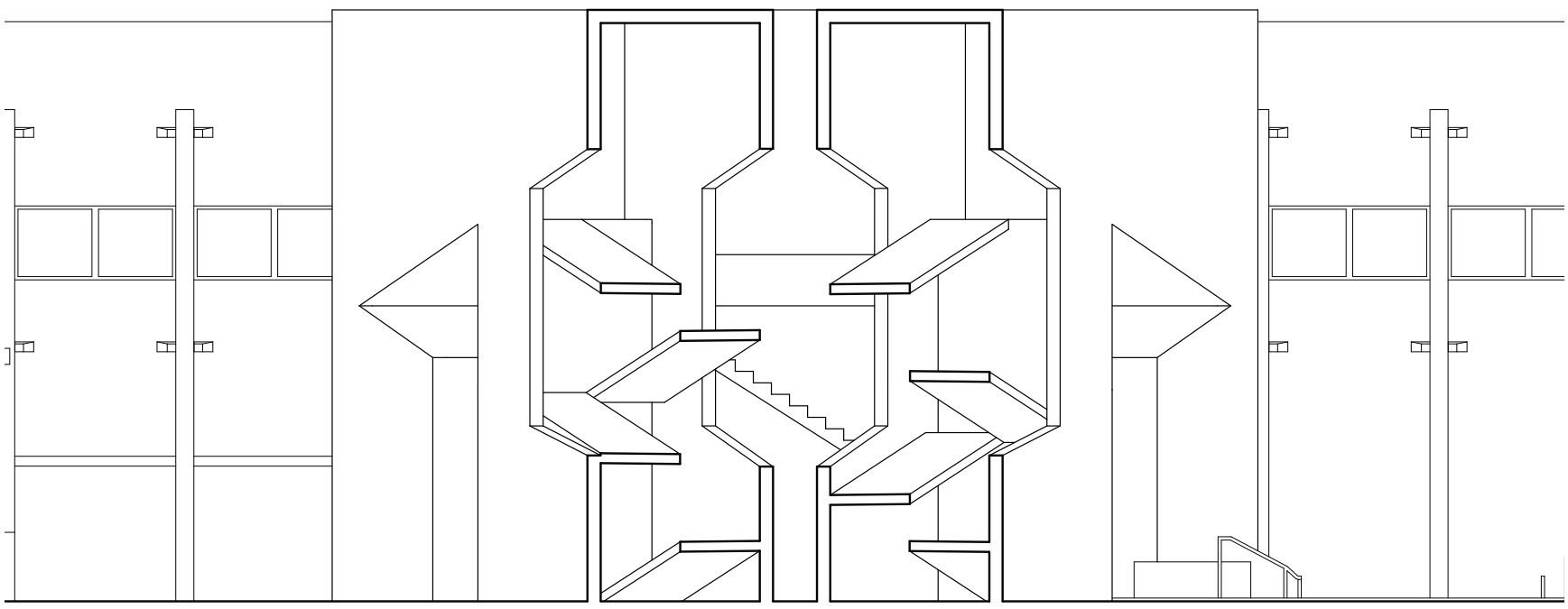

Section A

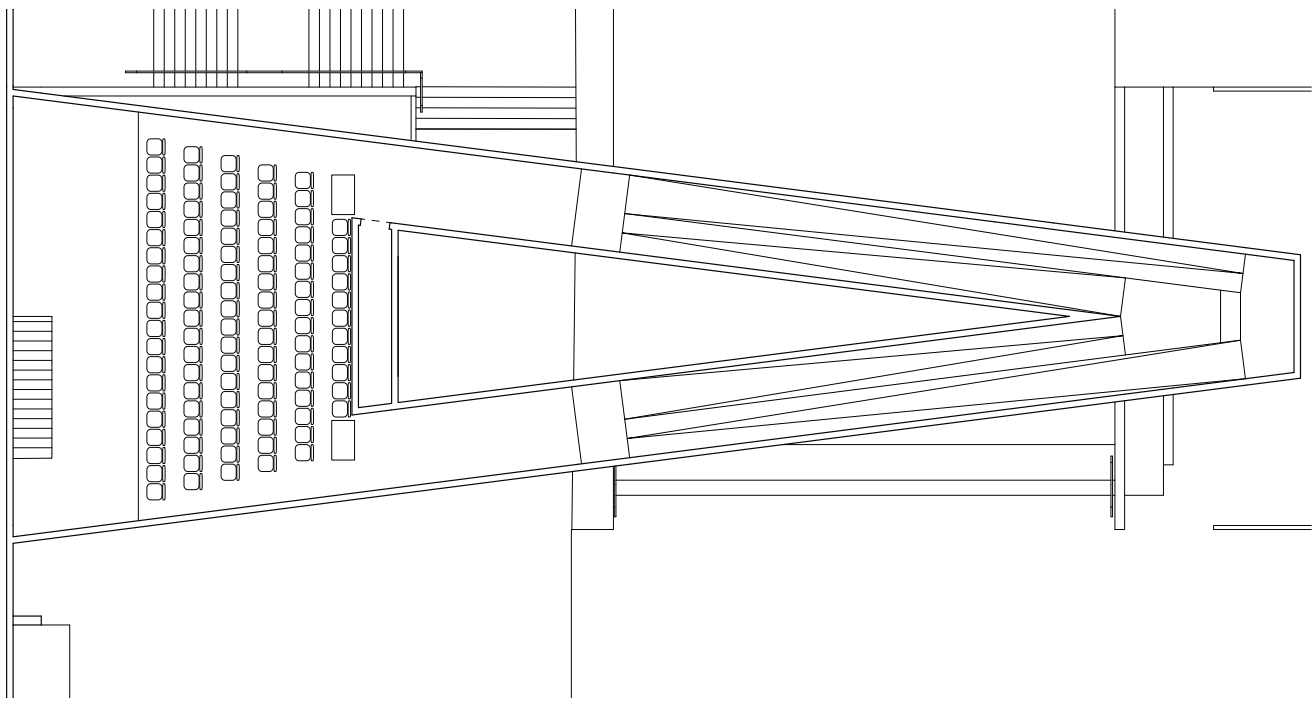

Second Floor Plan

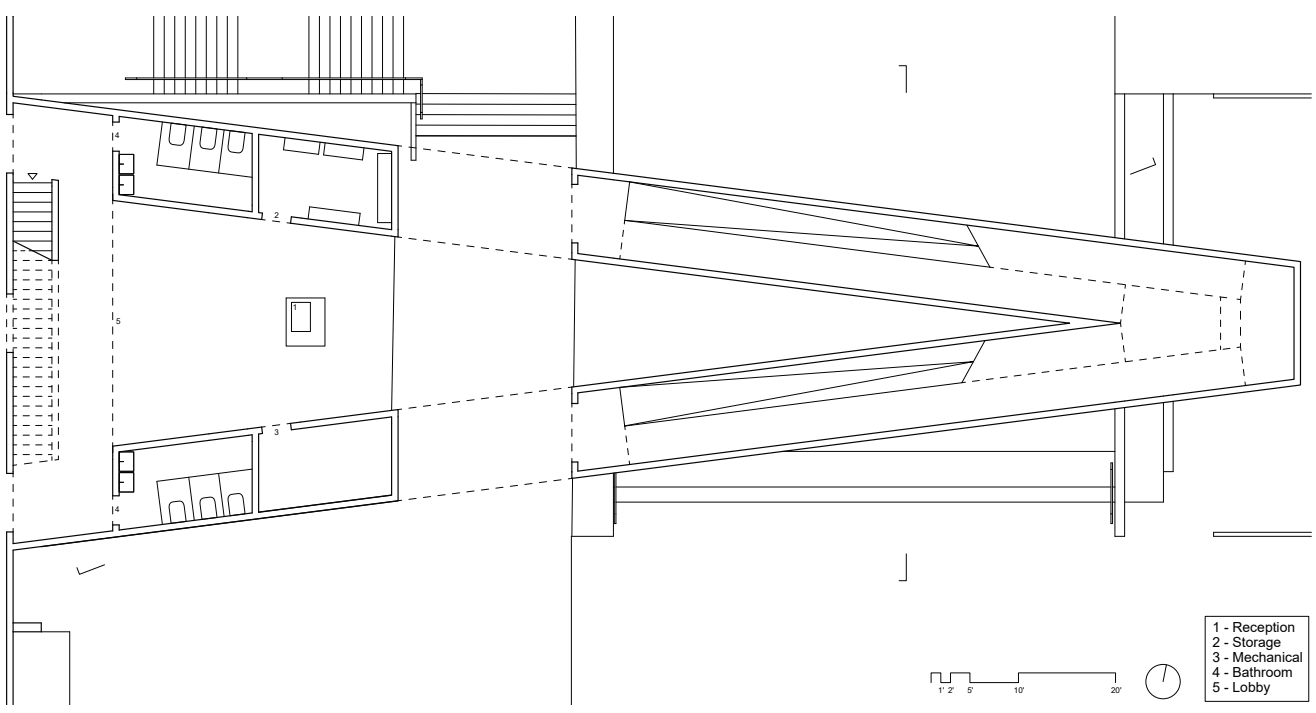

Ground Floor Plan

Jaden Atayee

CLT Factory-
This is the design and calculation of a structure that spans 300’ by 100’ to accomodate a CLT factory. A glulam repeated truss system and CLT bracing with steel joints make for an extremely light dead load of 32 PSF.

Jaden Atayee

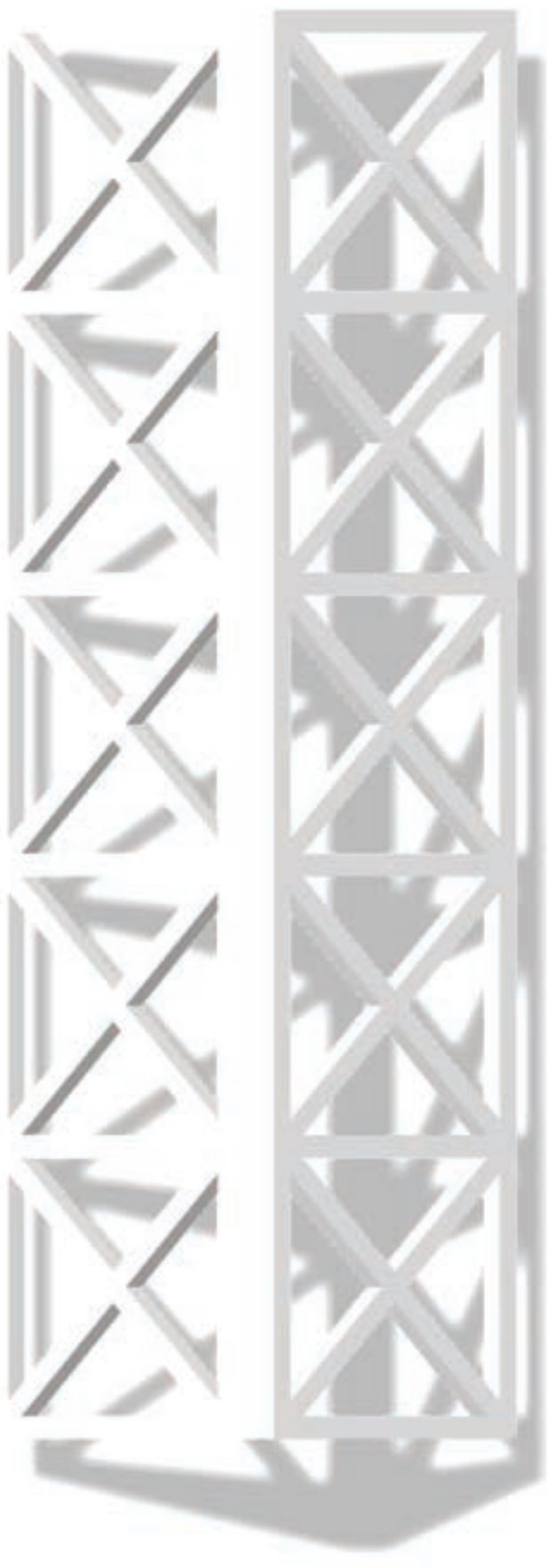

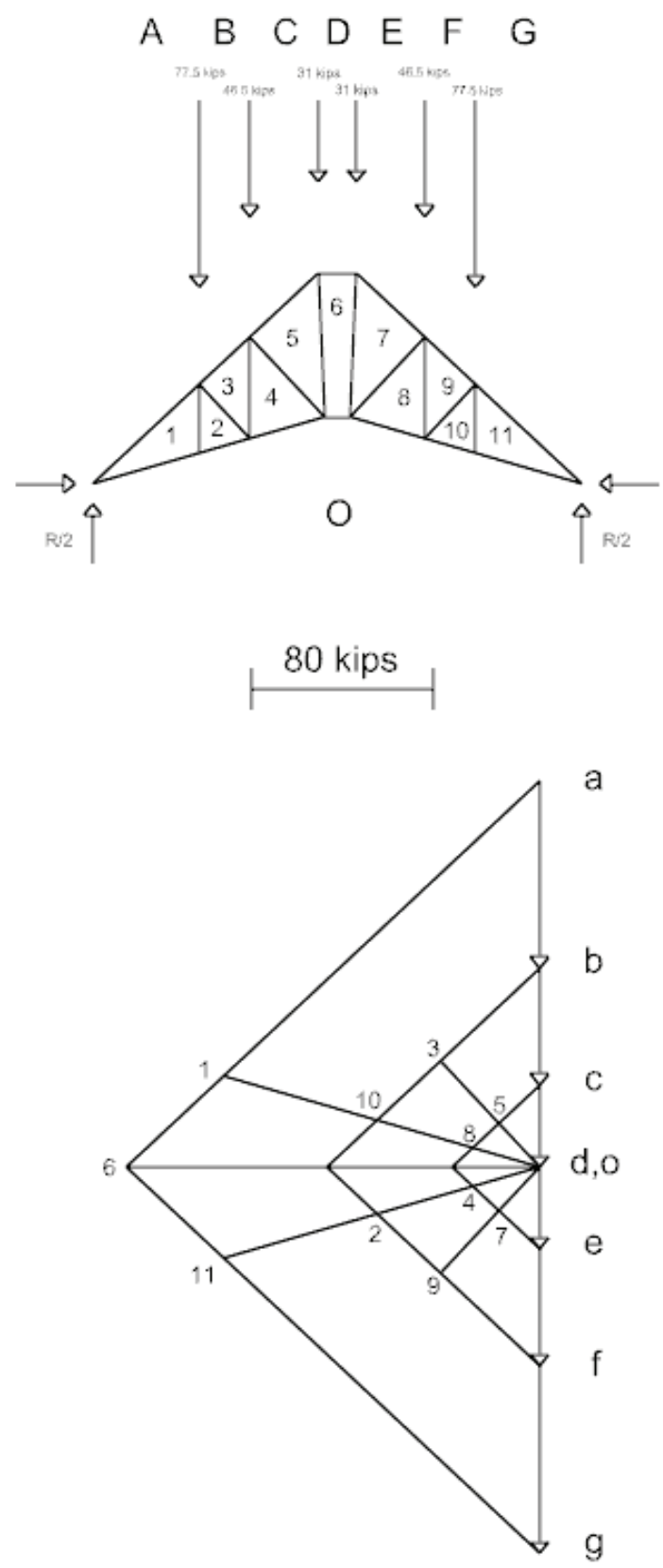

Calculating the structure starts with finding the tributary area of each truss and using the live PSF to find the load it carries. We then use the allowable pressure for glulam timber beams and use the load to find it's failure in buckling and in crushing, which results in the required cross section for each beam. For this project, the most effecient standard glulam timber cross section was a 12.25" x 36" beam. This lead to our total embodied carbon being only 3.6 CO2e/sf

Jaden Atayee

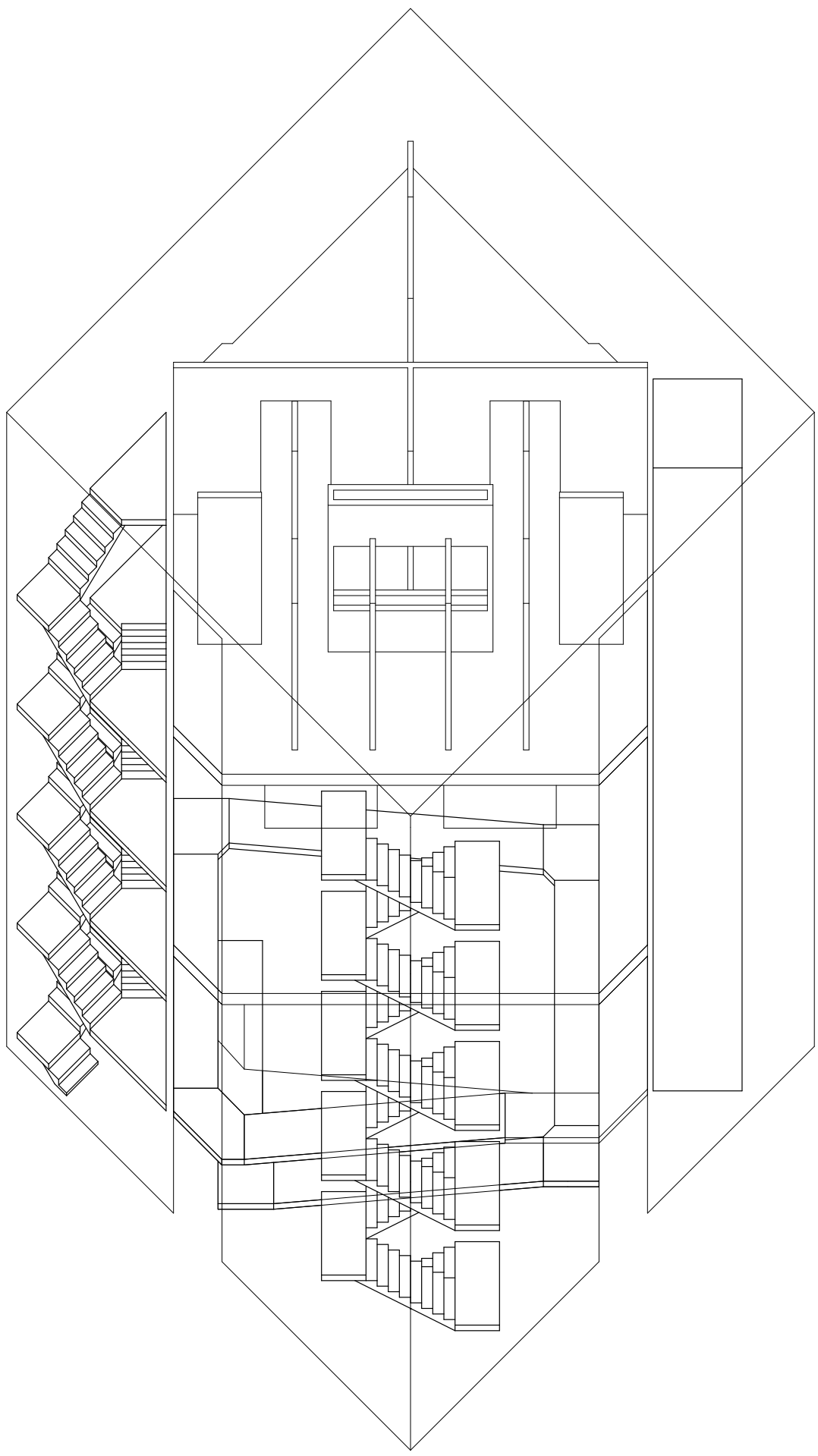

Annex-
Prompted to create an annex to Wurster Hall, this project uses program to explore room to room relationships. Poche and void are also used reinforce the intention of the spaces that are to accomodate Wurster Hall's students and faculty.

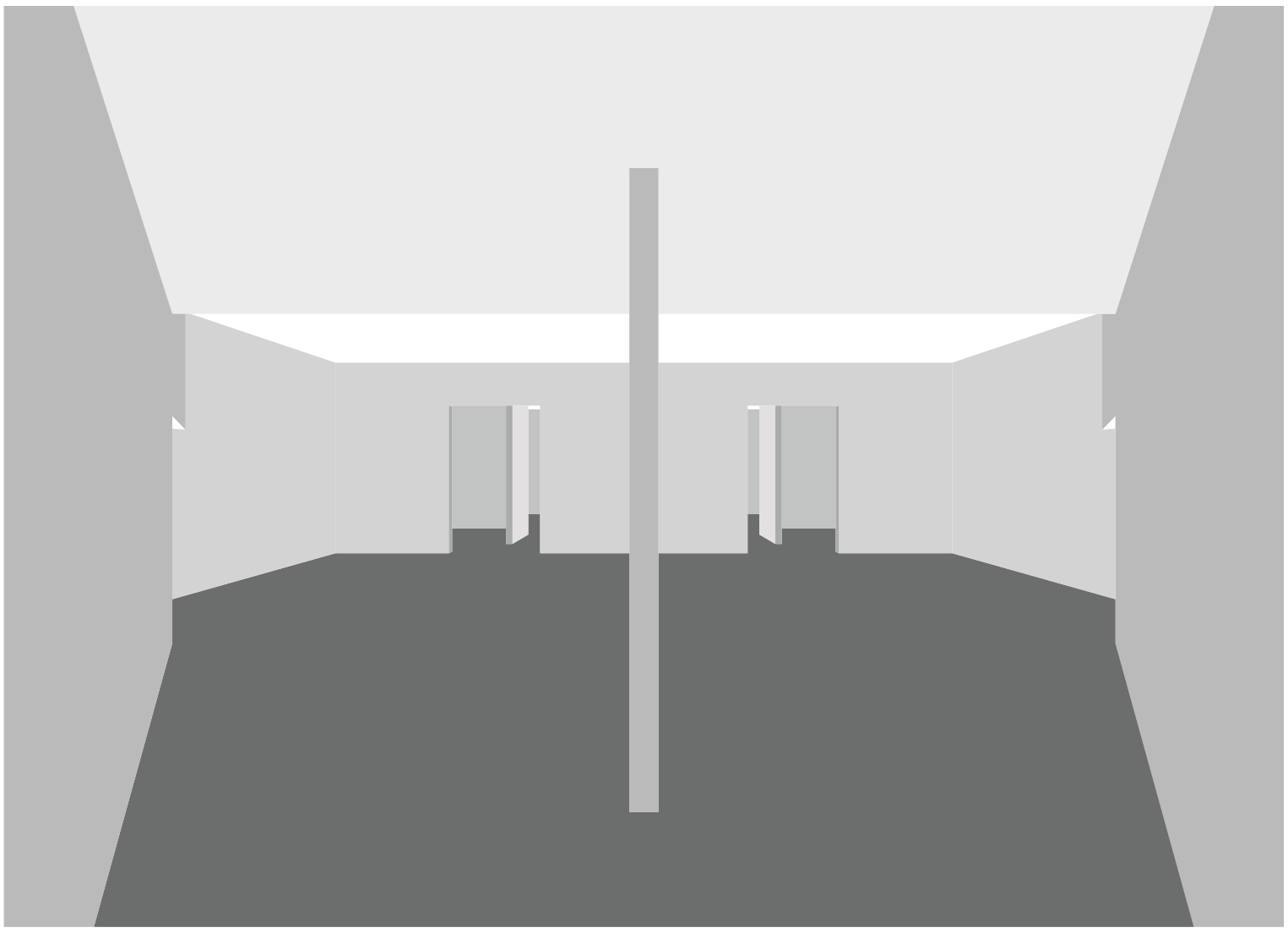

Jaden Atayee

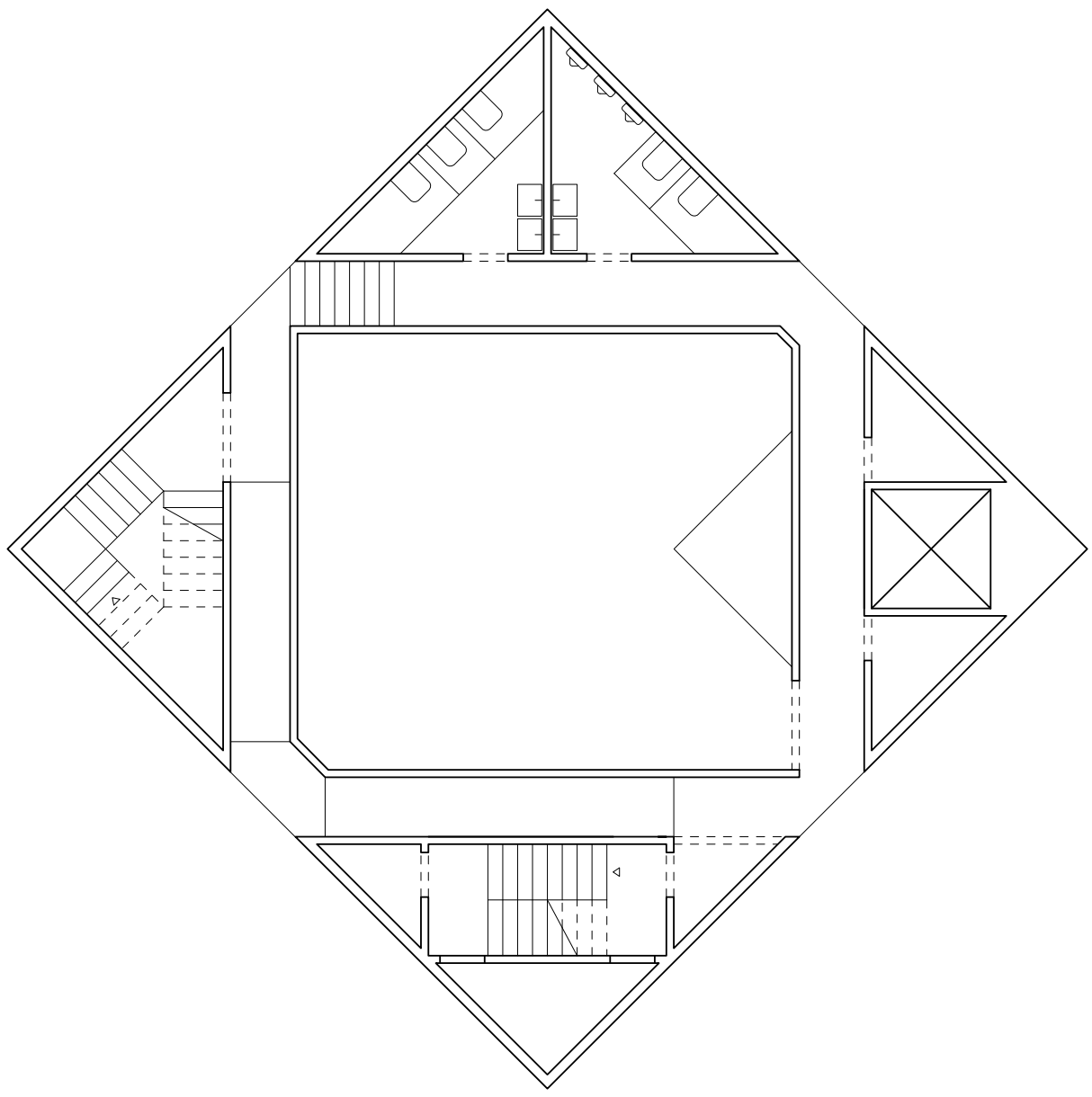

Second Floor Plan

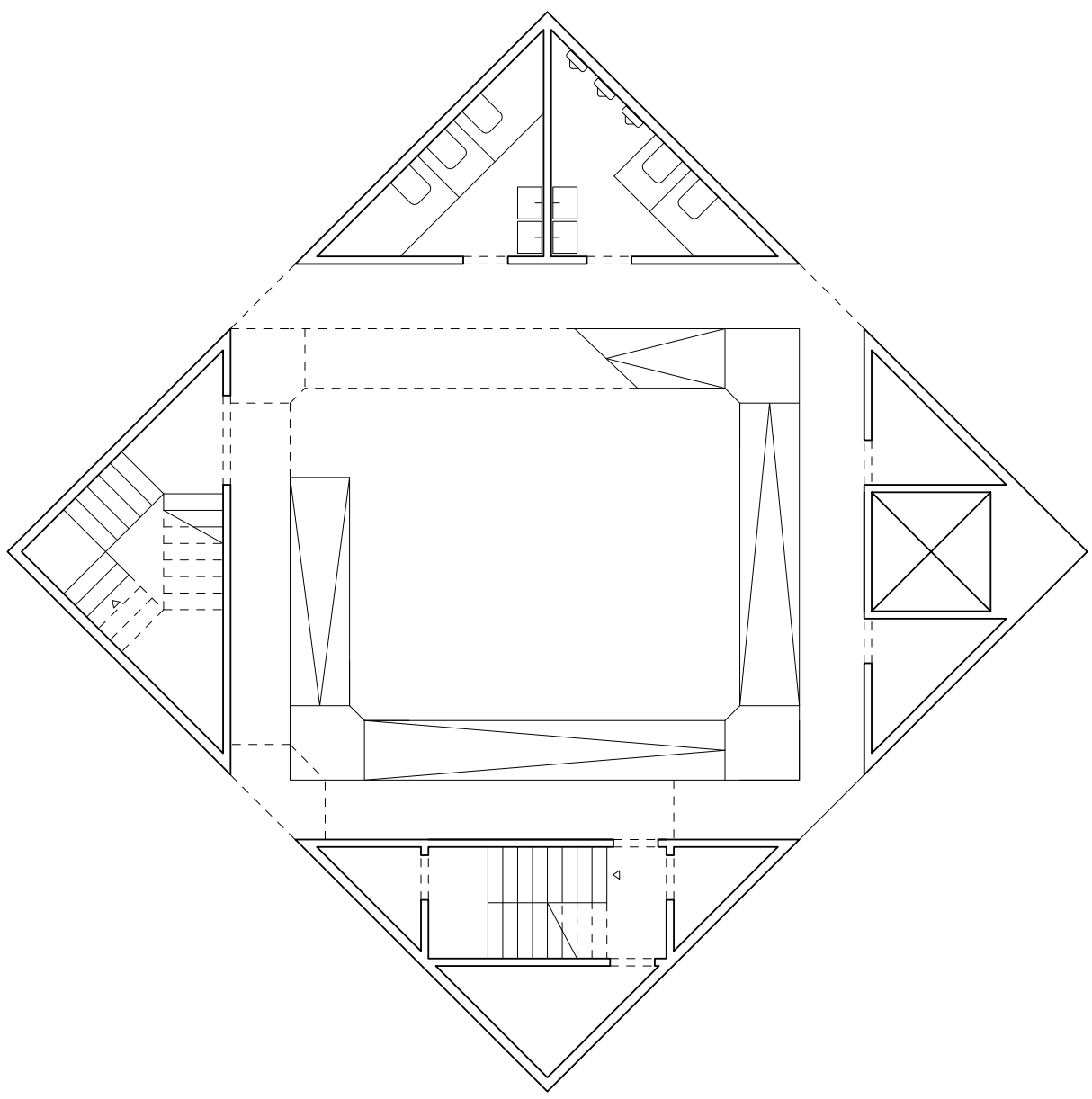

Ground Floor Plan

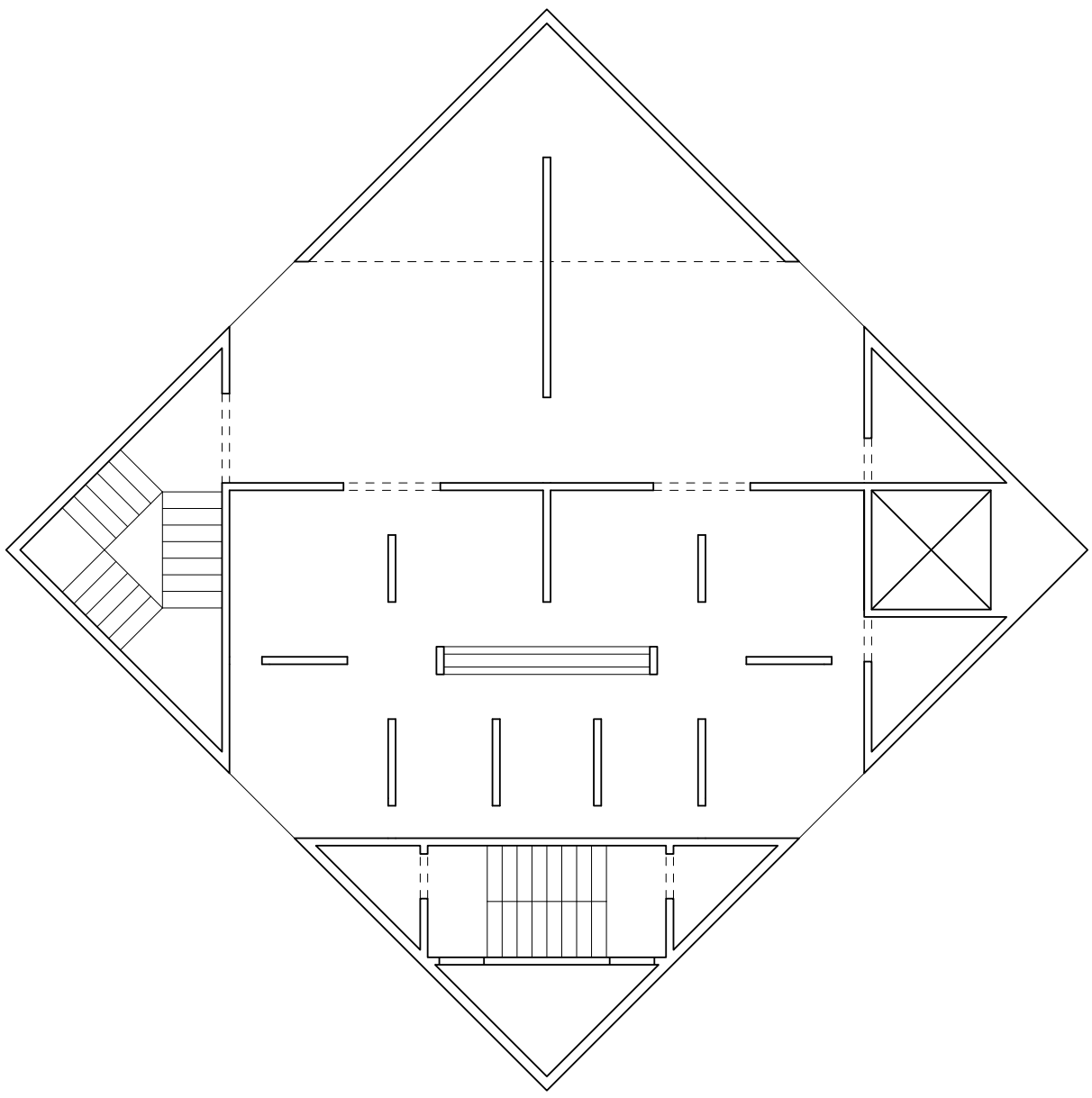

Fourth Floor Plan

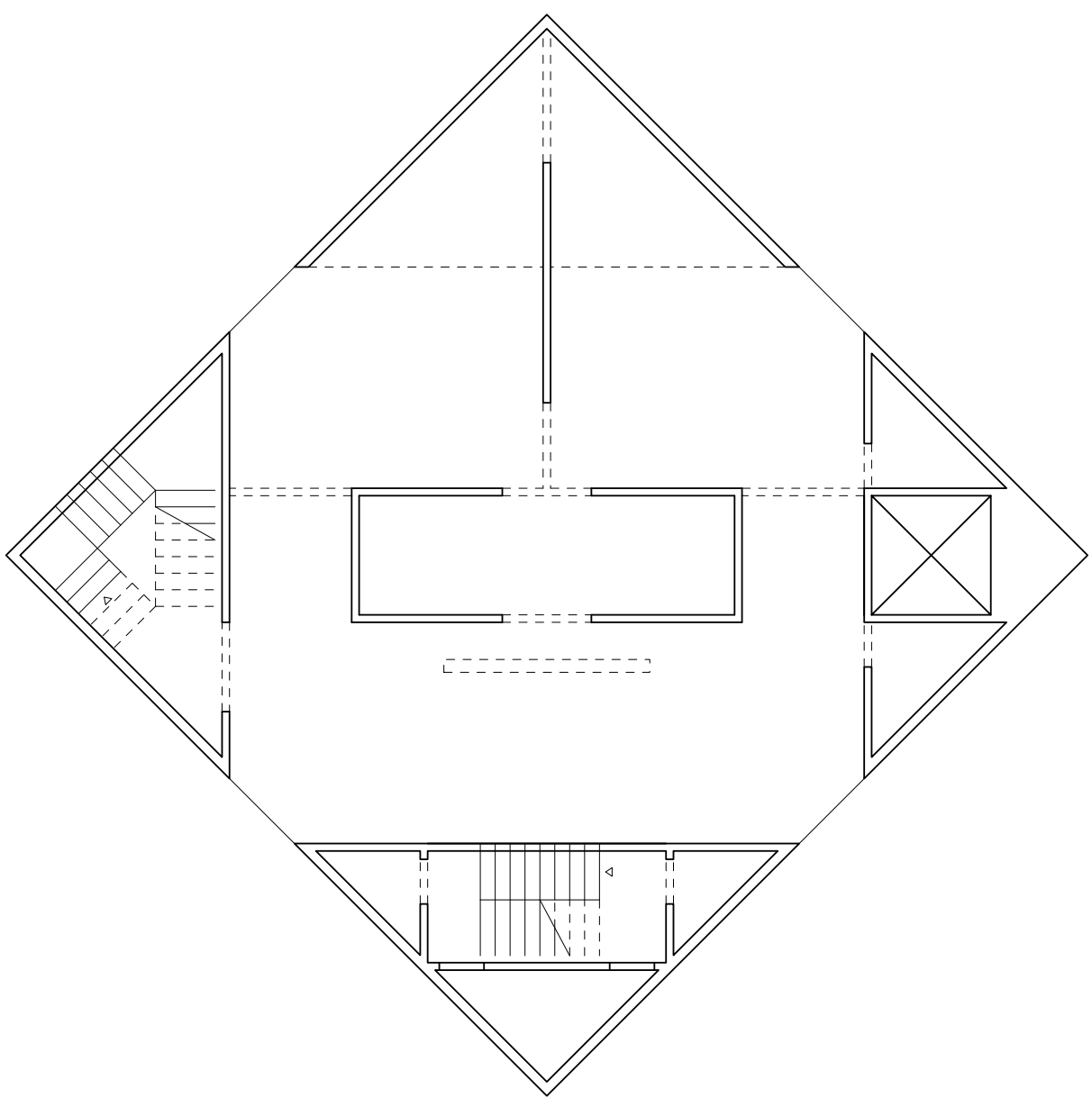

Third Floor Plan

Jaden Atayee

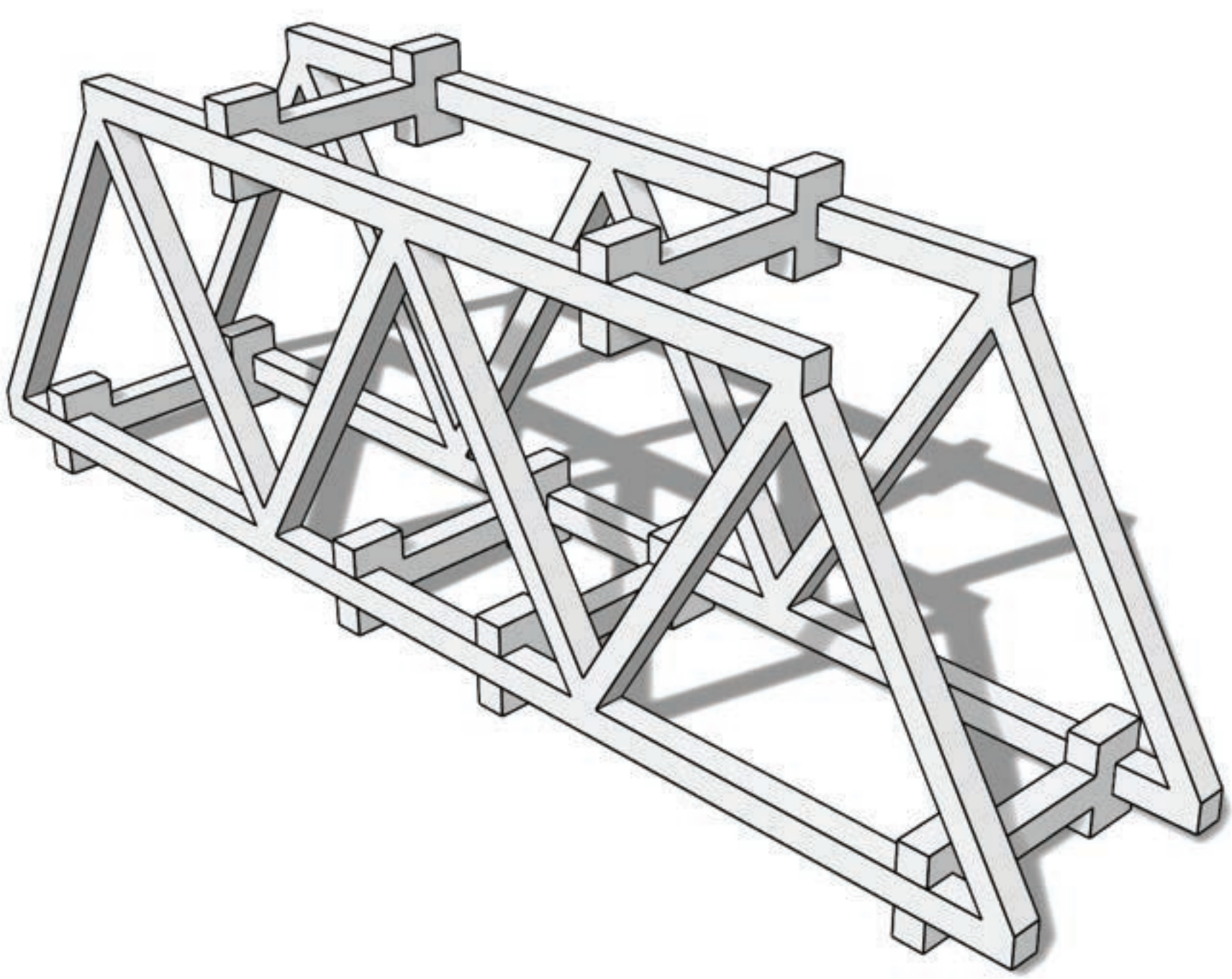

Lightweight Prize Winner-
The truss competition was based on strength to weight ratio using only balsa wood with a maximum member cross-section of 1/8” x 1/8”. The truss was started and completed 12 hours before testing and had a 1118:1 strength to weight ratio

Lightweight Prize
Jaden Atayee
23 g (weight)
Sommers Dennehy Neal
56.7 lb (load)

Jaden Atayee

Radial Pavilion-
The project asserts a clear geometric order with non orthogonal site bounds through radial symmetry. Corner openings establish a cross condition, allowing the pavilion to be understood simultaneously as whole and fractured. Circulation spirals

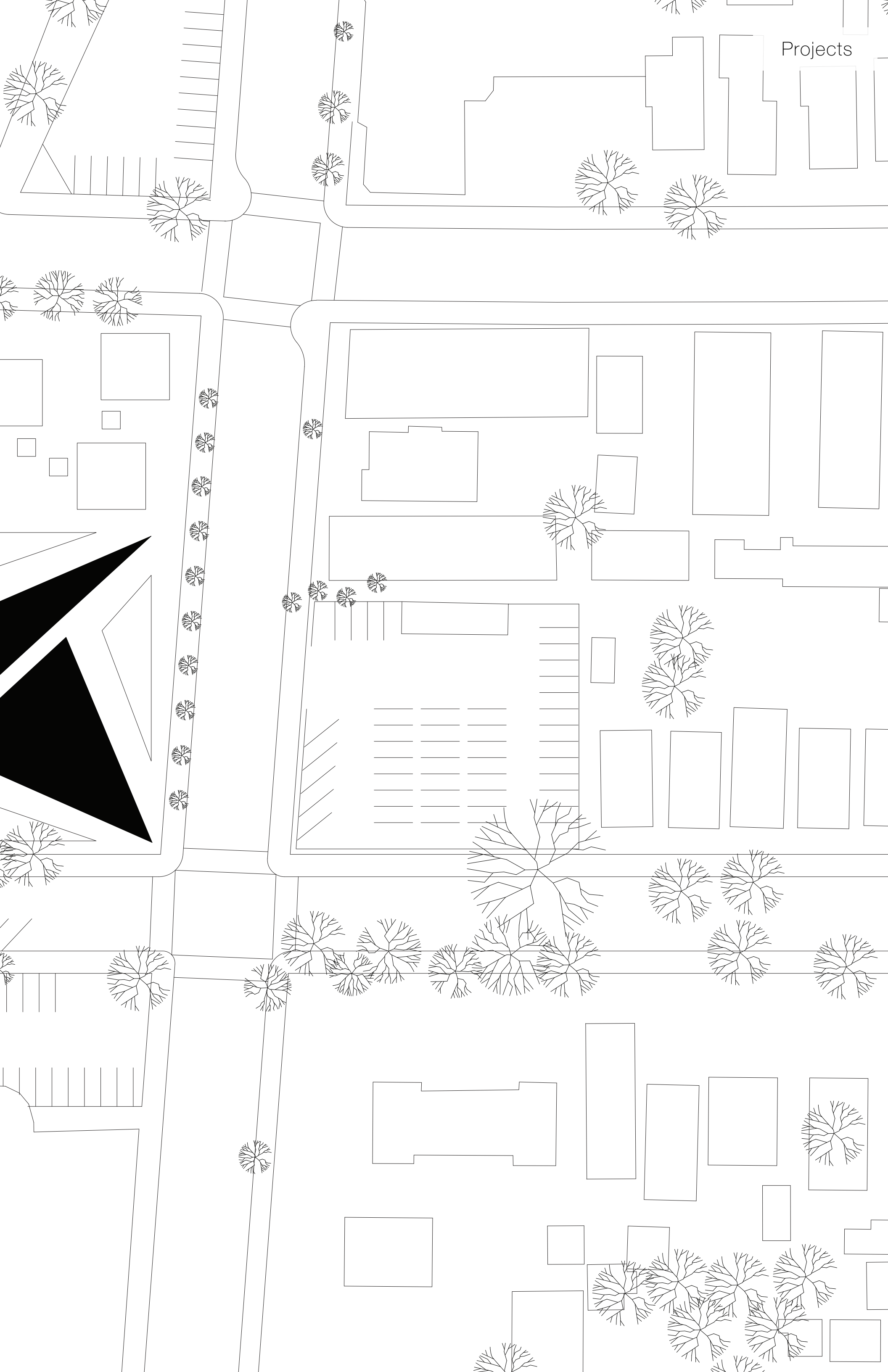
Projects

Jaden Atayee

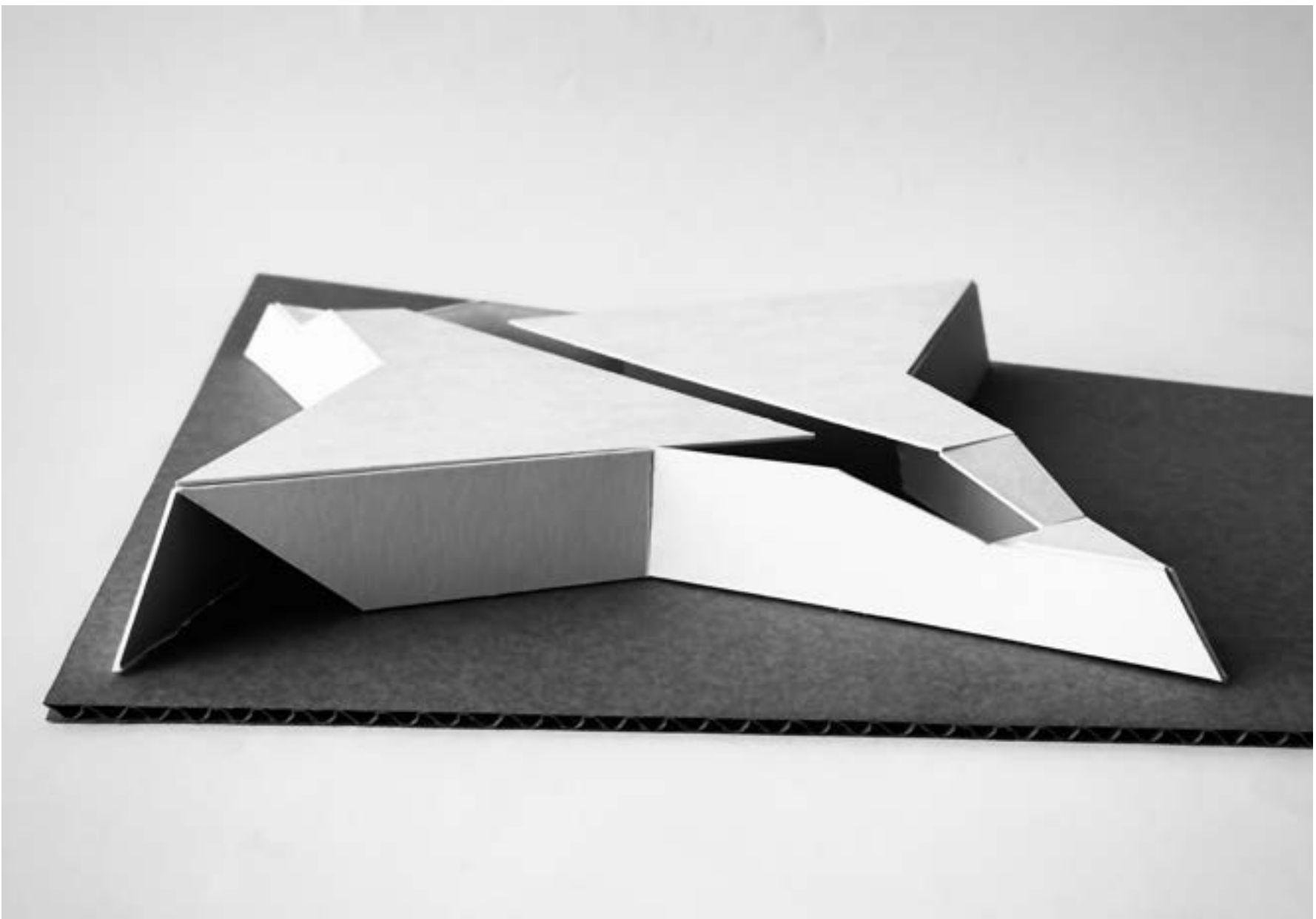

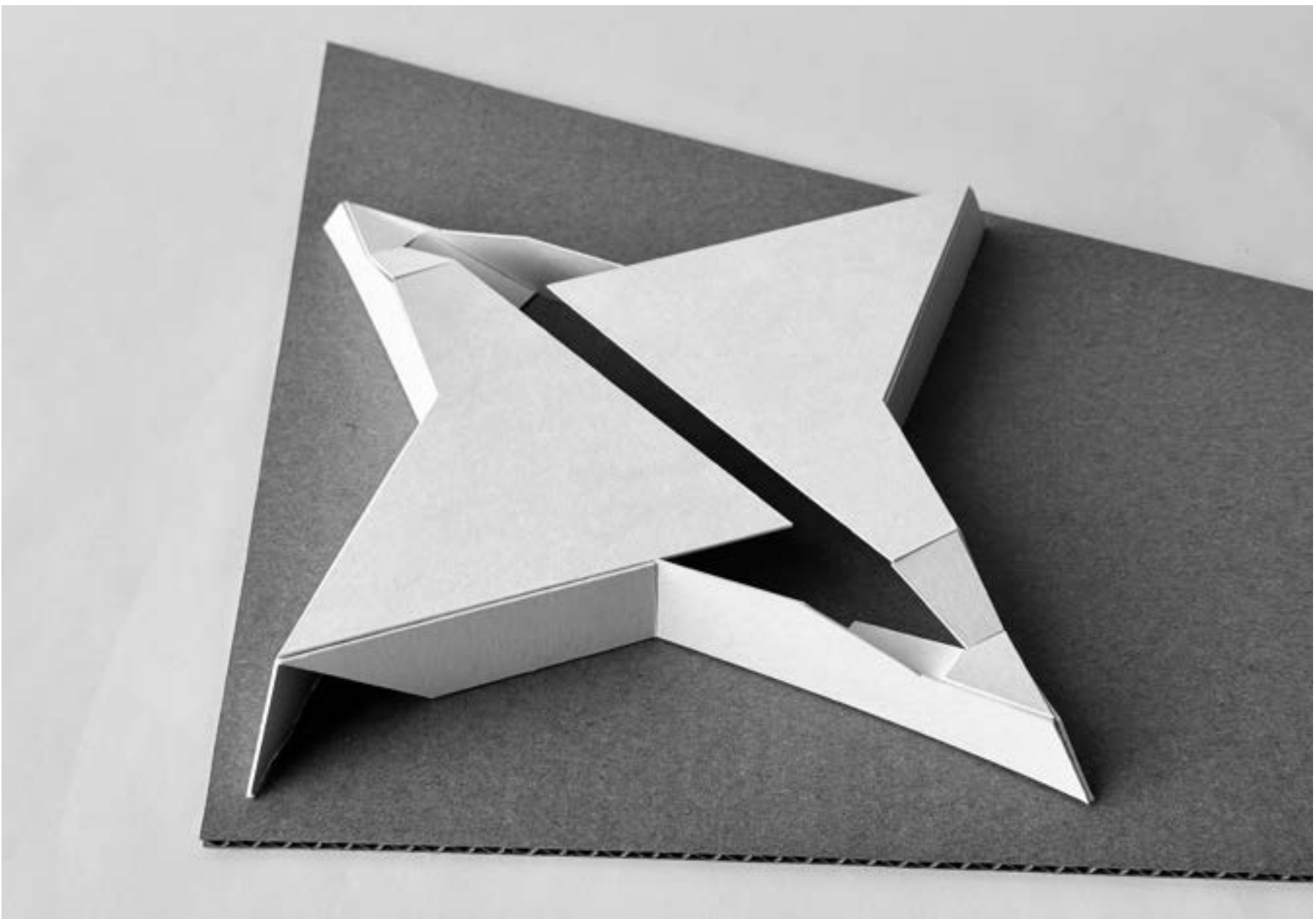

Jaden Atayee

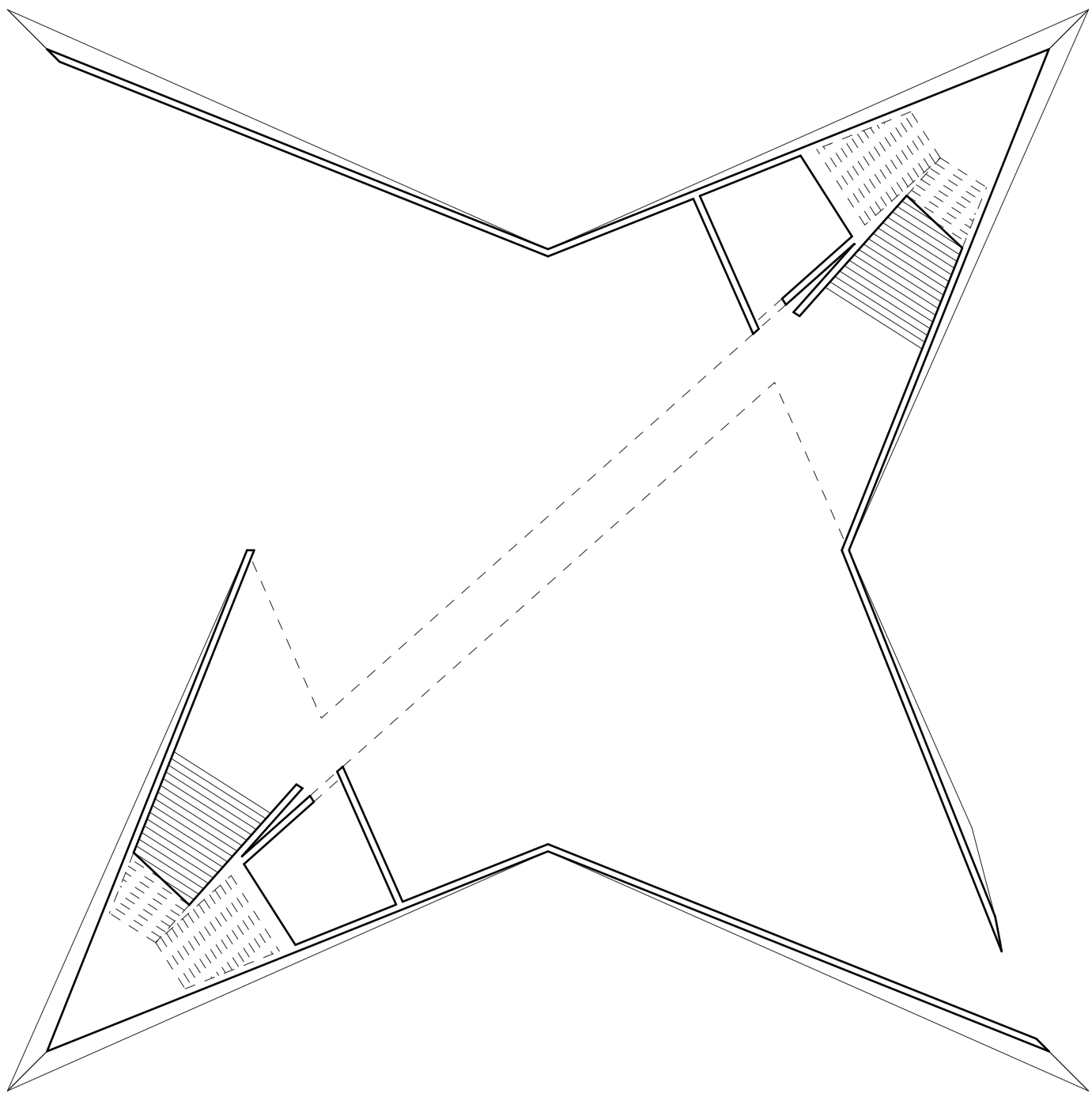

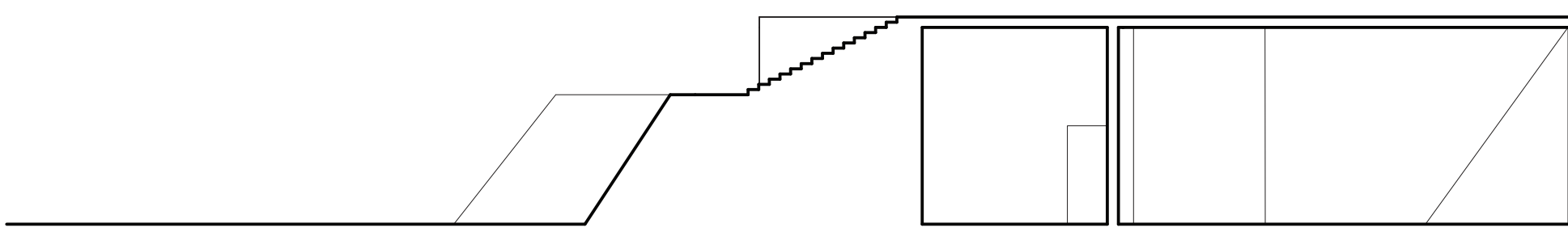

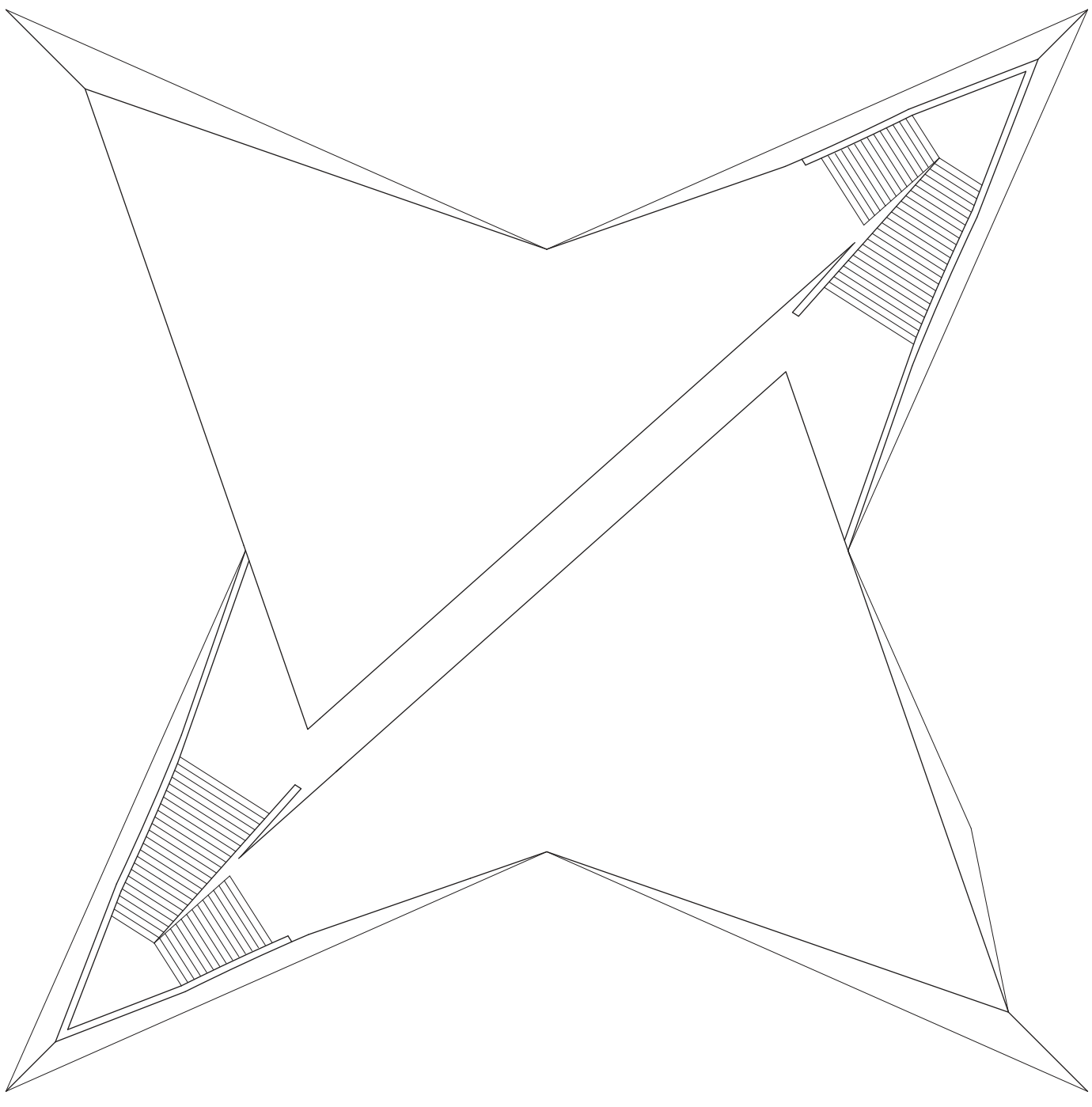

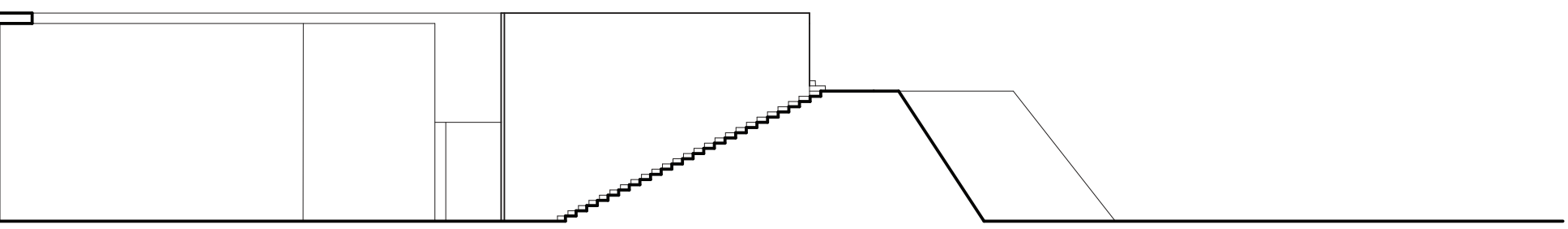
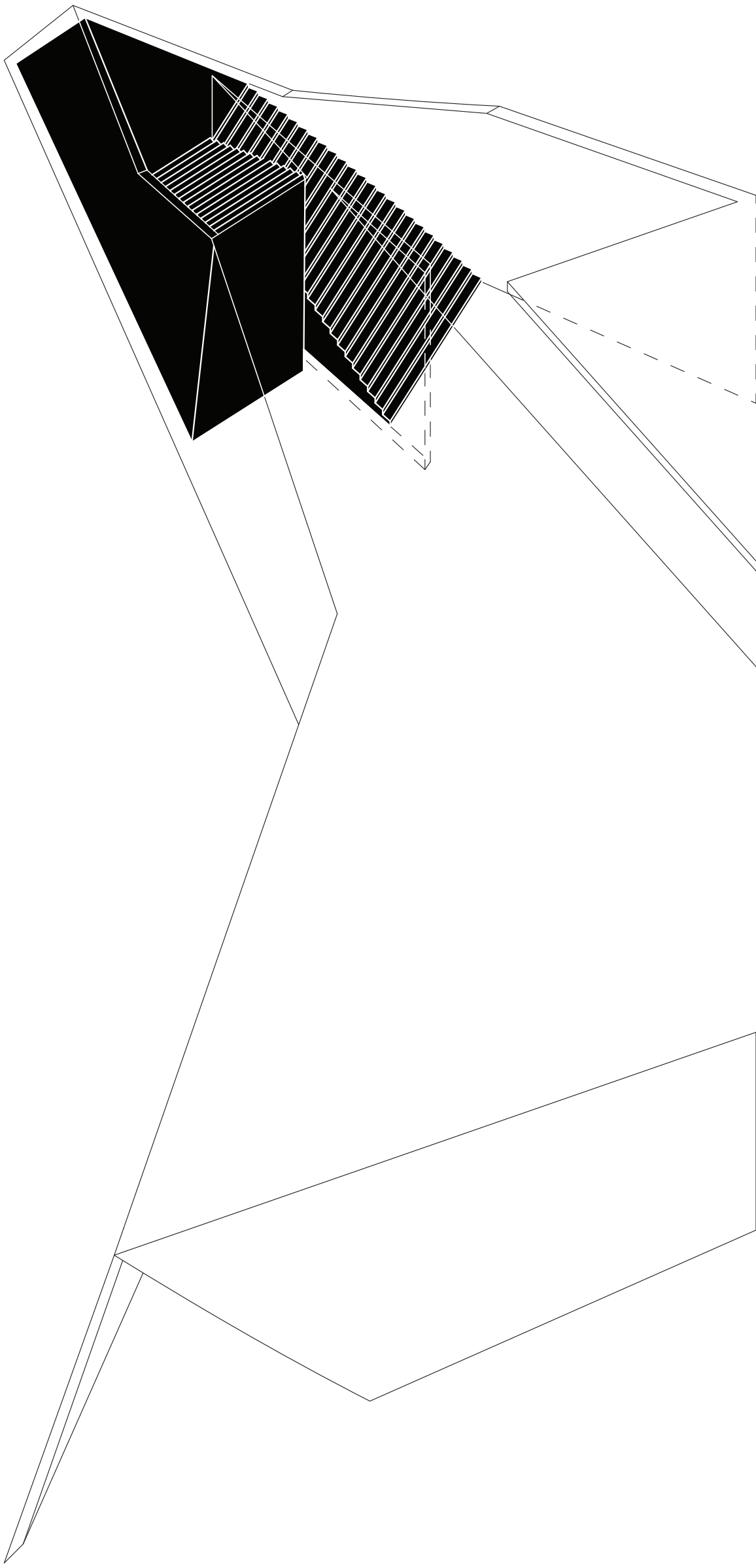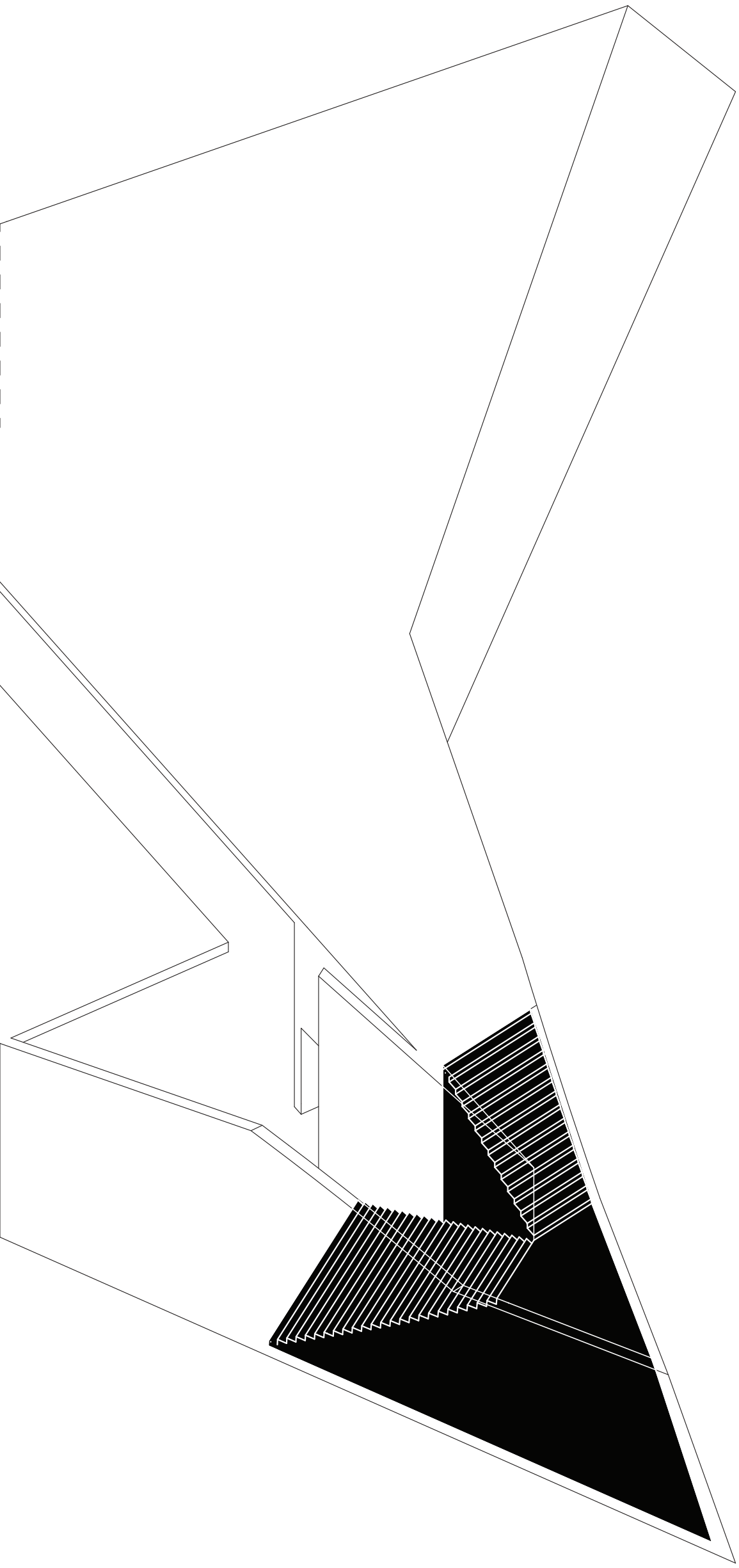
Jaden Atayee