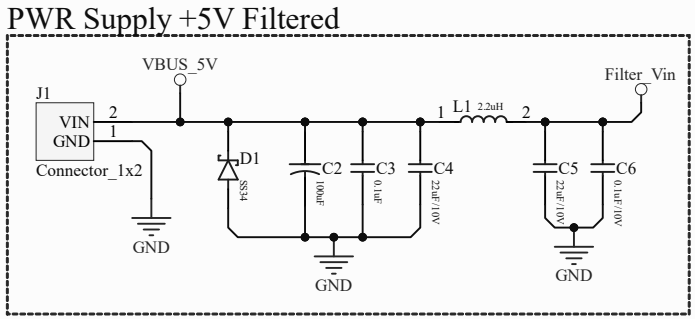

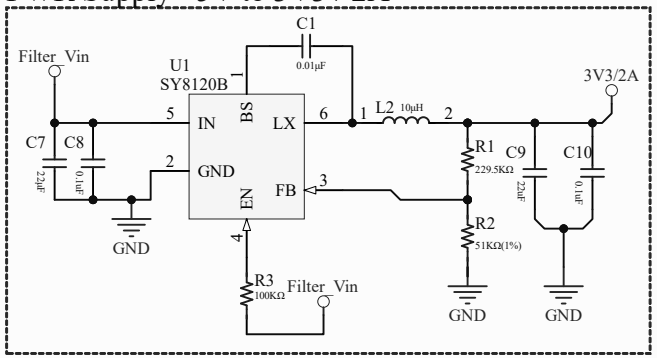

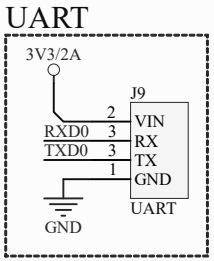

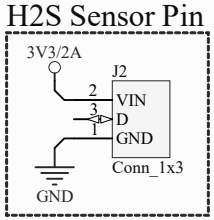

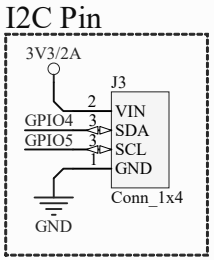

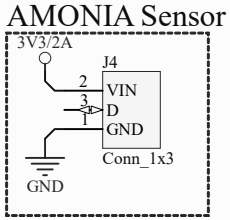

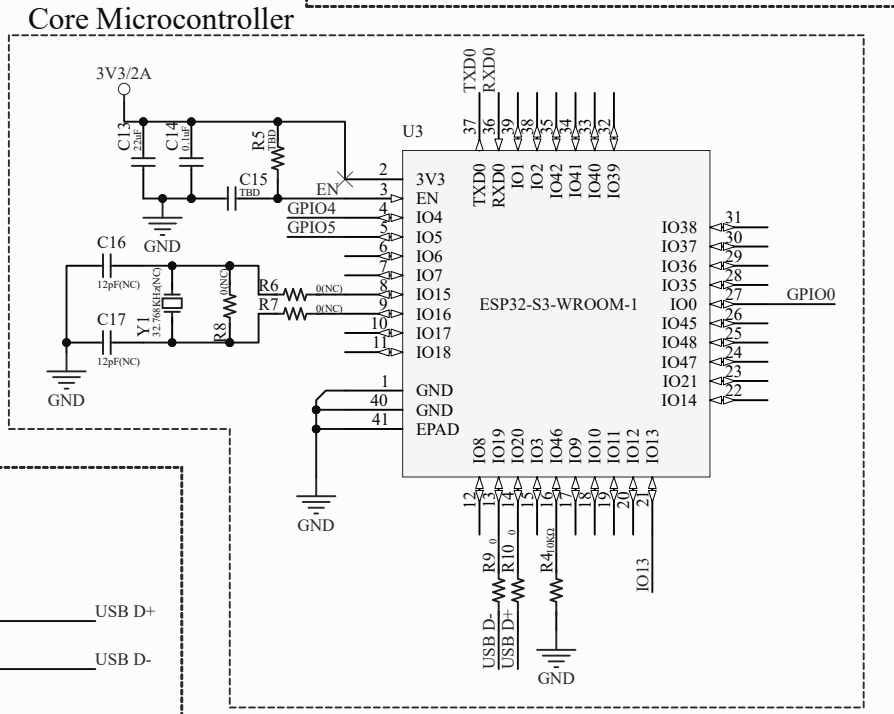

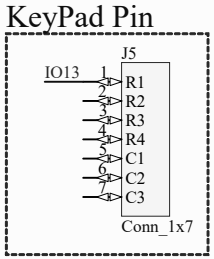

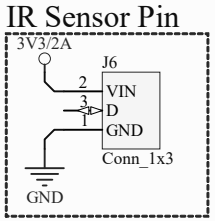

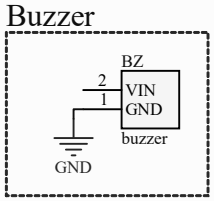

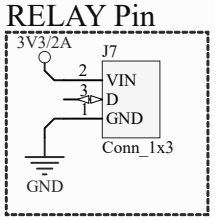

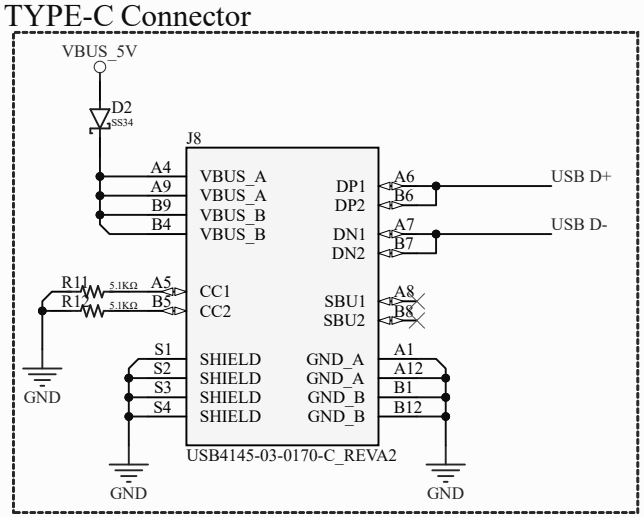

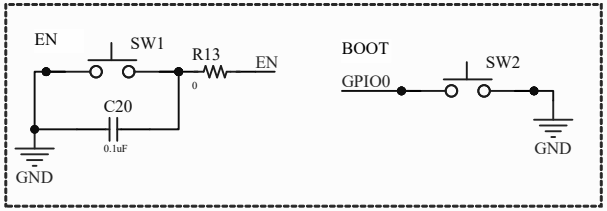

Title		
Size A4	Number	Revision
Date: 4-24-2026		Sheet of
File: E:\Program\..\Sheet1.SchDoc		Drawn By: