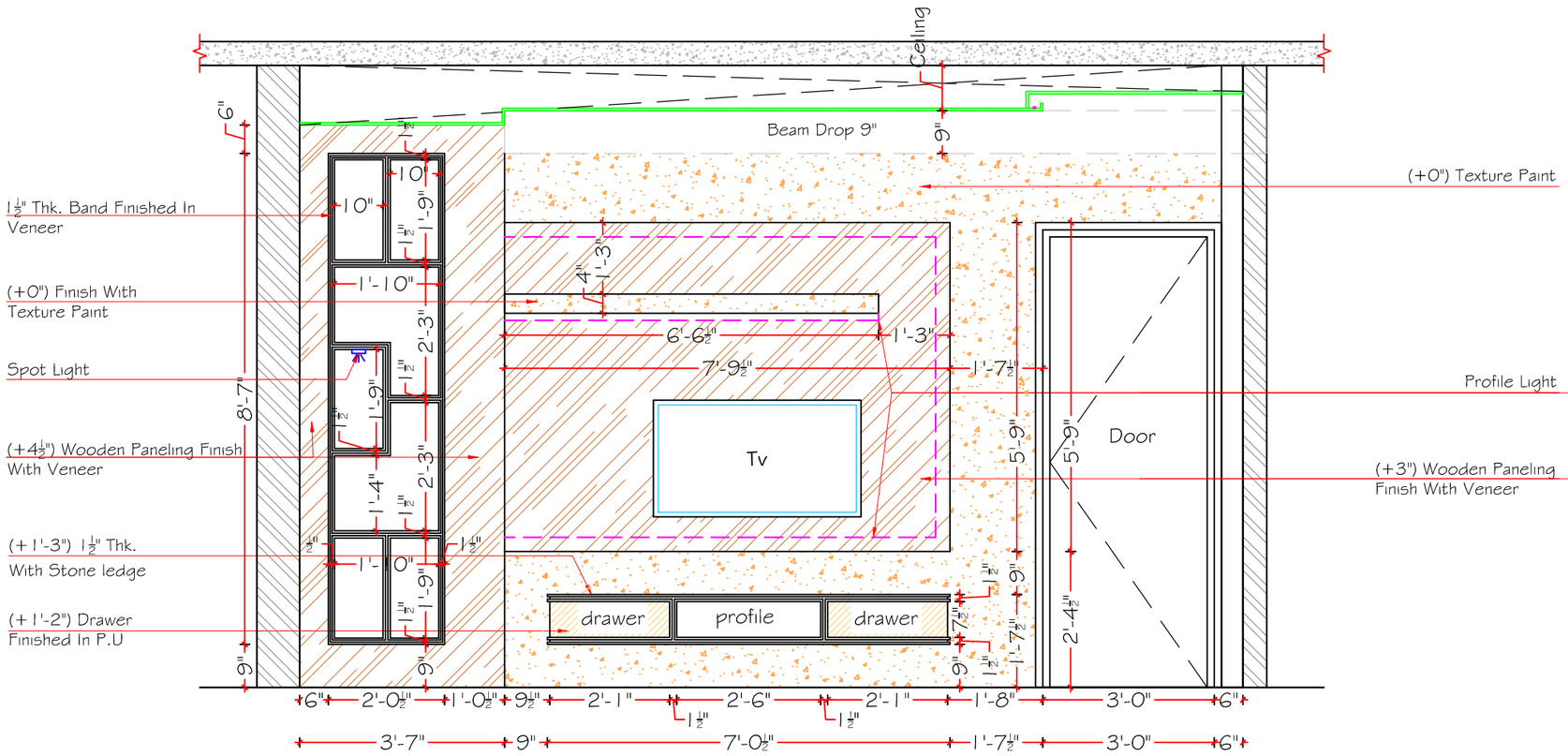


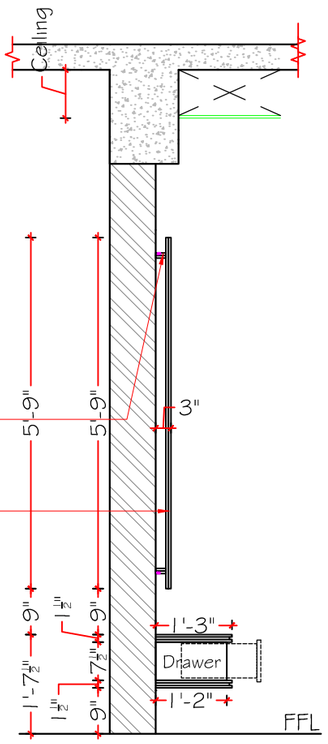


SECTION -15

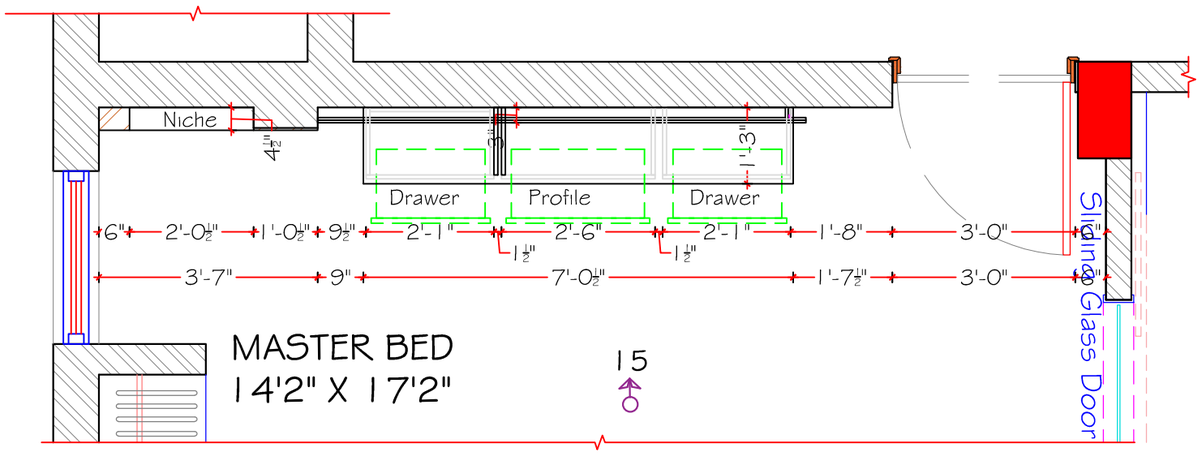


DESIGN BY TAJ

HAS THE COPY RIGHTS OF THIS DOCUMENT, AND IT SHOULDN'T BE USED BY ANYBODY WITHOUT THEIR PERMISSION ***

GENERAL NOTE

1. all dimensions are in feet and inches unless specified.
2. don't scale this drawing, only written dimensions are to be followed

CLIENT :- Mr. VENU SIR

PROJECT :- PROPOSED DUPLEX HOUSE INTERIOR @ KOMPALLY, HYDERABAD.

TITLE :- FIRST FLOOR MASTER BED ROOM TV UNIT DETAILS

DEALT : MOHD SALMAN

CHECKED : TAJUDDIN

DATE : 18-02-2022

SCALE : N.T.S.

DWG. : 15

E N S W

Design by Taj
ARCHITECTS & INTERIORS DESIGNERS
MASAB TANK, HYDERABAD-500028.
Ph. No: +91 96668 76757
Email: taj6757@gmail.com