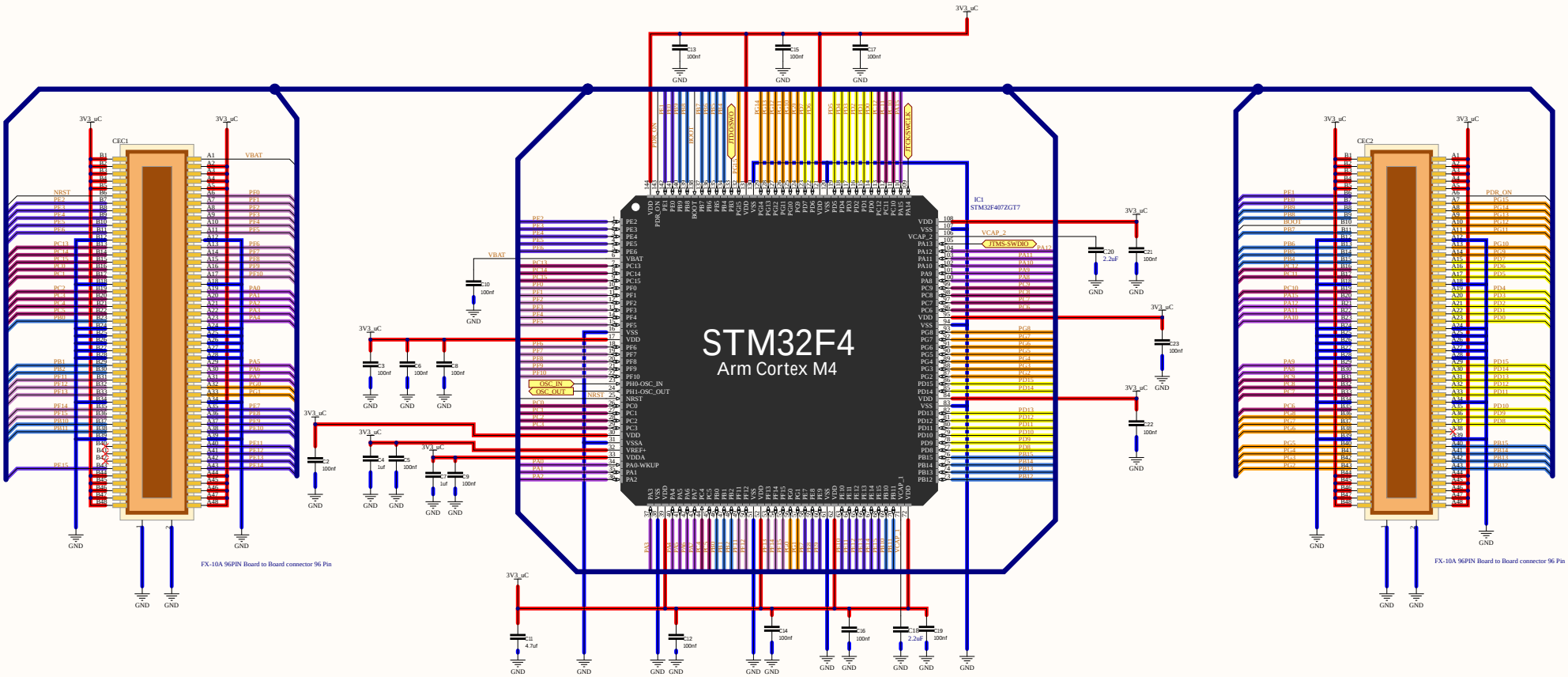

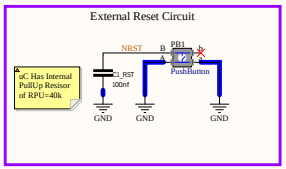

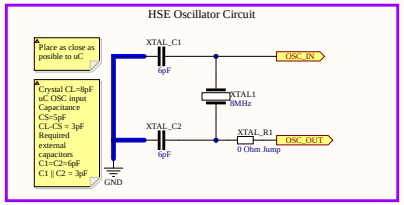

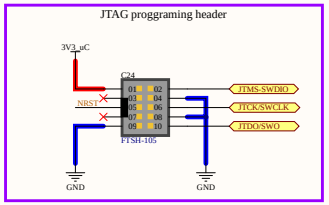

Title		
Size A2	Number	Revision
Date: 5/28/2024	Sheet of	
File: C:\Users\...\STM32_Brain.SchDoc	Drawn By:	