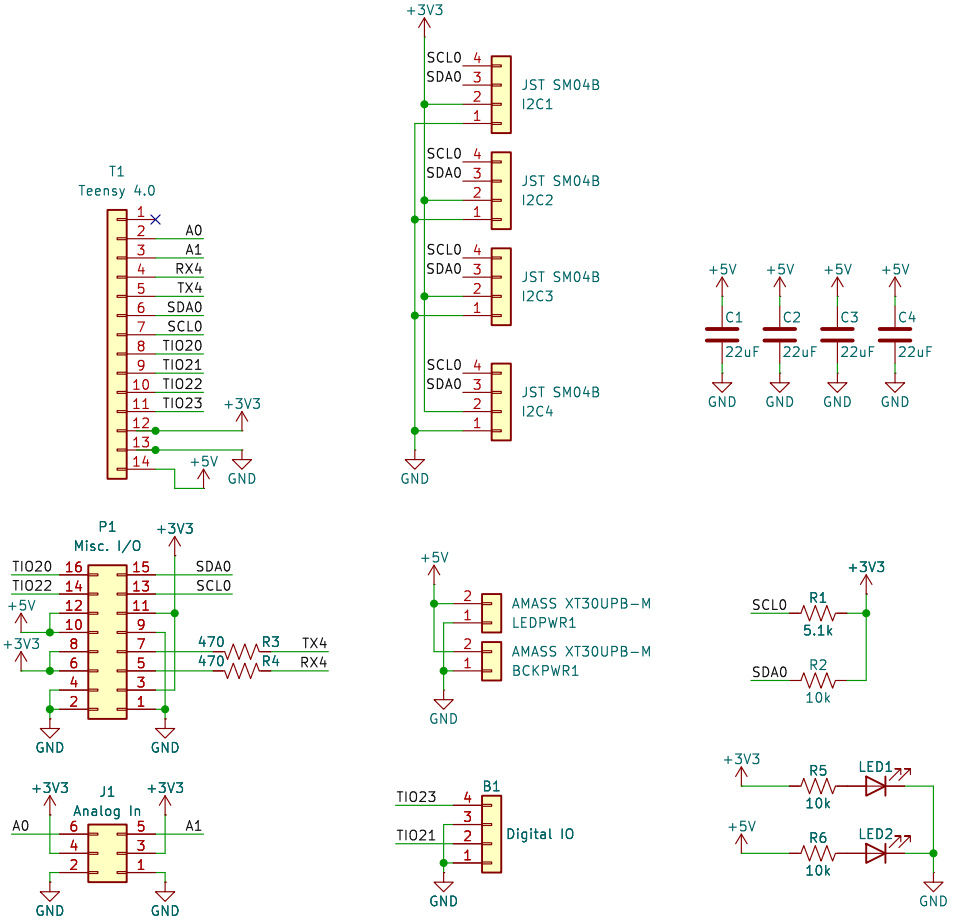

H1
M3 Screw
H2
M3 Screw

Original Design by Coela Can't!
Converted to KiCAD by MyloWhylo
Coelacanth Electronics, LLC

Sheet: /
File: SmartLED_Shield_Breakout.kicad_sch

Title: SmartMatrix Protogen Shield

Size: A4	Date: 2024-05-23	**Rev: 1.1**
KiCad E.D.A. 9.0.4		Id: 1/1