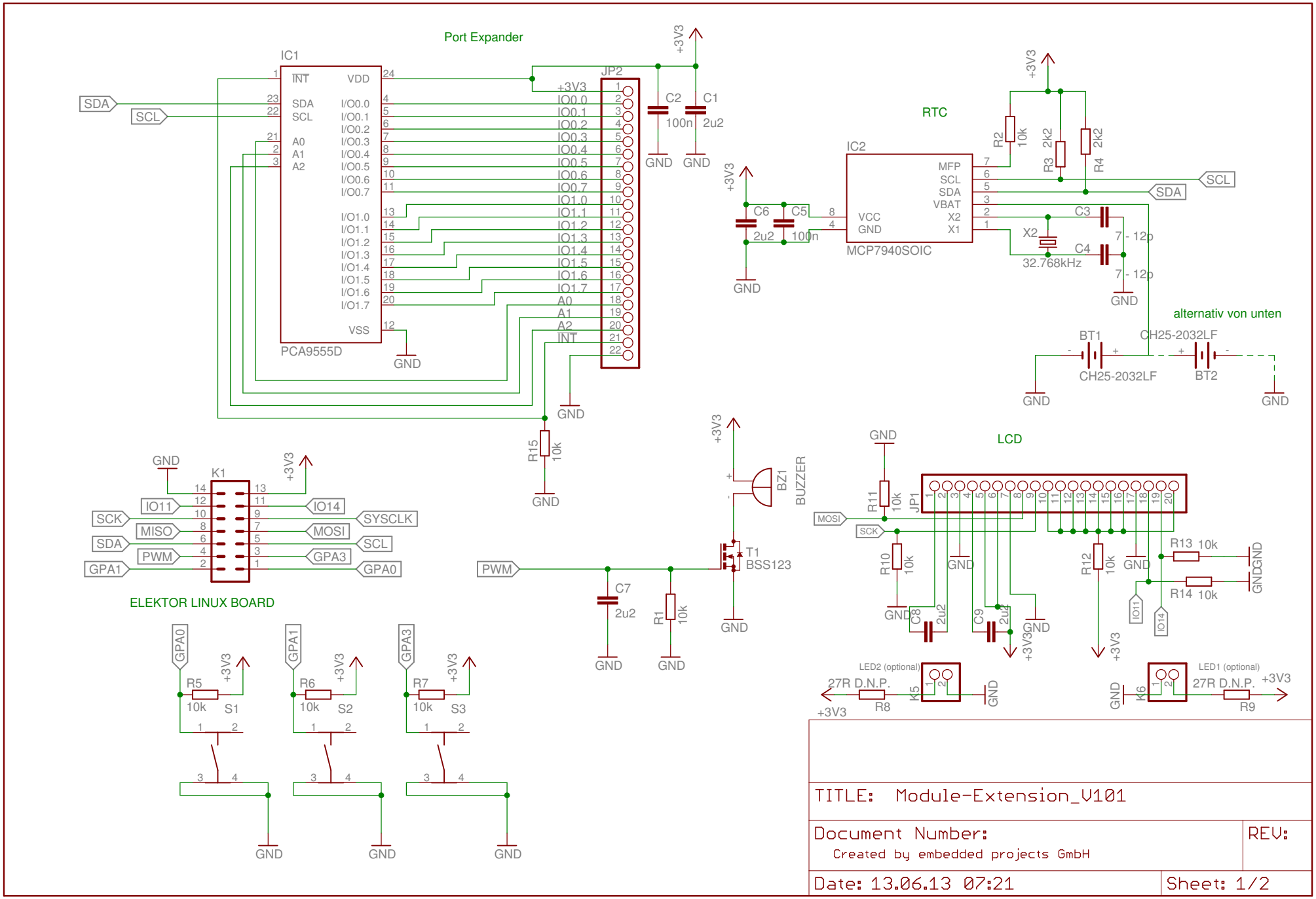

TITLE: Module-Extension_V101

Document Number:

Created by embedded projects GmbH

REV:

Date: 13.06.13 07:21

Sheet: 1/2