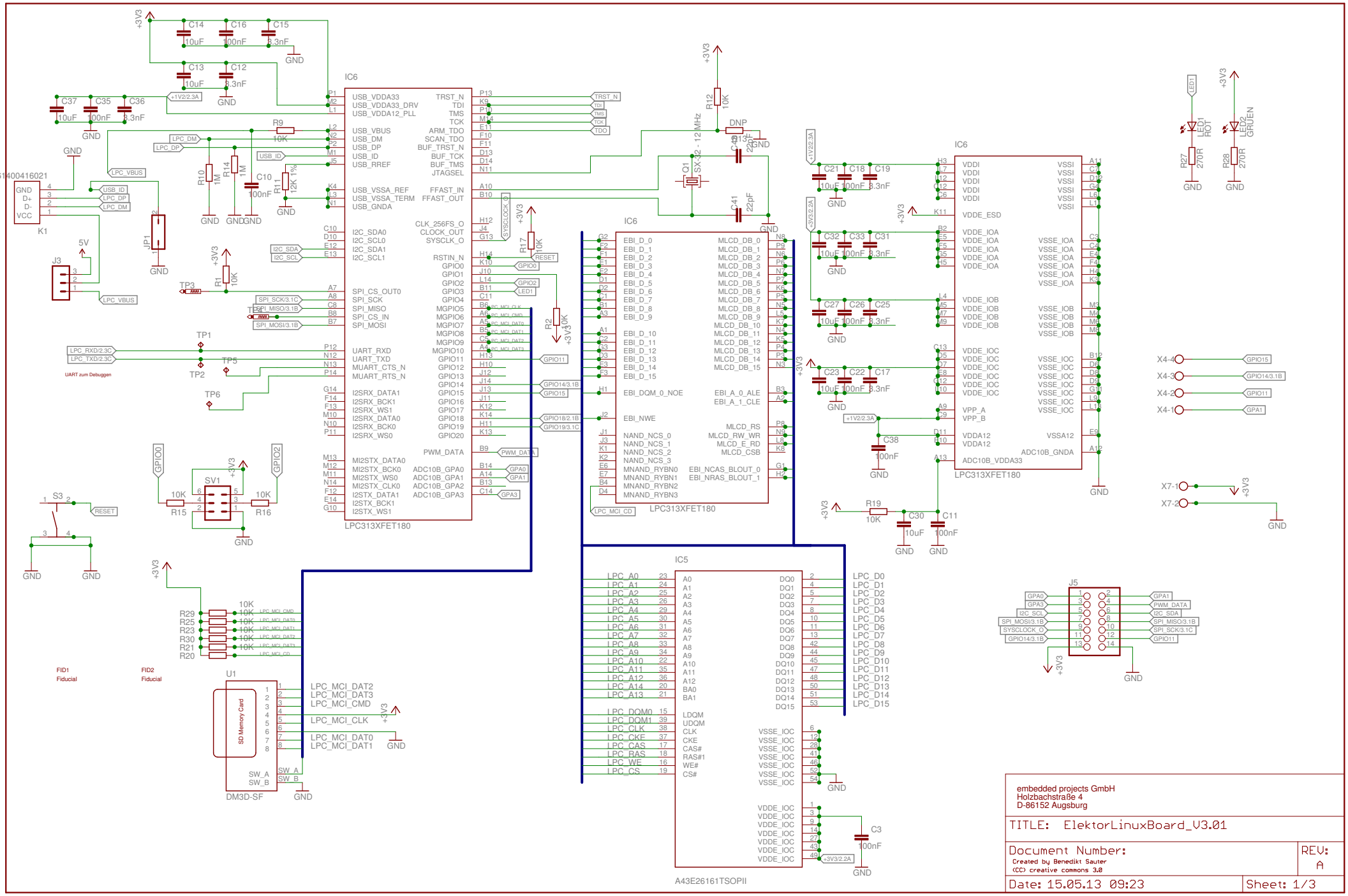
IC6
LPC313XFET180
IC5
A43E26161TSOPII
IC6
LPC313XFET180
IC6
LPC313XFET180
K1
61400416021
J3
JP1
SV1
S3
U1
SD Memory Card
DM3D-SF
J5
LED1
LED2
Q1
SX-32 - 12 MHz
UART zum Debuggen
FID1
Fiducial
FID2
Fiducial
+3V3
GND
+1V2/2.3A
+3V2/2.2A
+3V3/2.2A
LPC_VBUS
LPC_DM
LPC_DP
USB_ID
I2C_SDA
I2C_SCL
SPI_SCK/3.1C
SPI_MISO/3.1B
SPI_MOSI/3.1B
LPC_RXD/2.3C
LPC_TXD/2.3C
RESET
GPIO0
GPIO2
GPIO11
GPIO14/3.1B
GPIO15
GPIO18/2.1B
GPIO19/3.1C
PWM_DATA
GPA0
GPA1
GPA3
LPC_MCI_CD
LPC_MCI_CMD
LPC_MCI_DAT0
LPC_MCI_DAT1
LPC_MCI_DAT2
LPC_MCI_DAT3
LPC_MCI_CLK
SW_A
SW_B
TRST_N
TDI
TMS
TCK
TDO
SYSCLOCK_O
LED1
ROT
LED2
GRUEN
X4-4
X4-3
X4-2
X4-1
X7-1
X7-2
embedded projects GmbH
Holzbachstraße 4
D-86152 Augsburg
TITLE: ElektorLinuxBoard_V3.01
Document Number:
Created by Benedikt Sauter
(CC) creative commons 3.0
REV: A
Date: 15.05.13 09:23
Sheet: 1/3

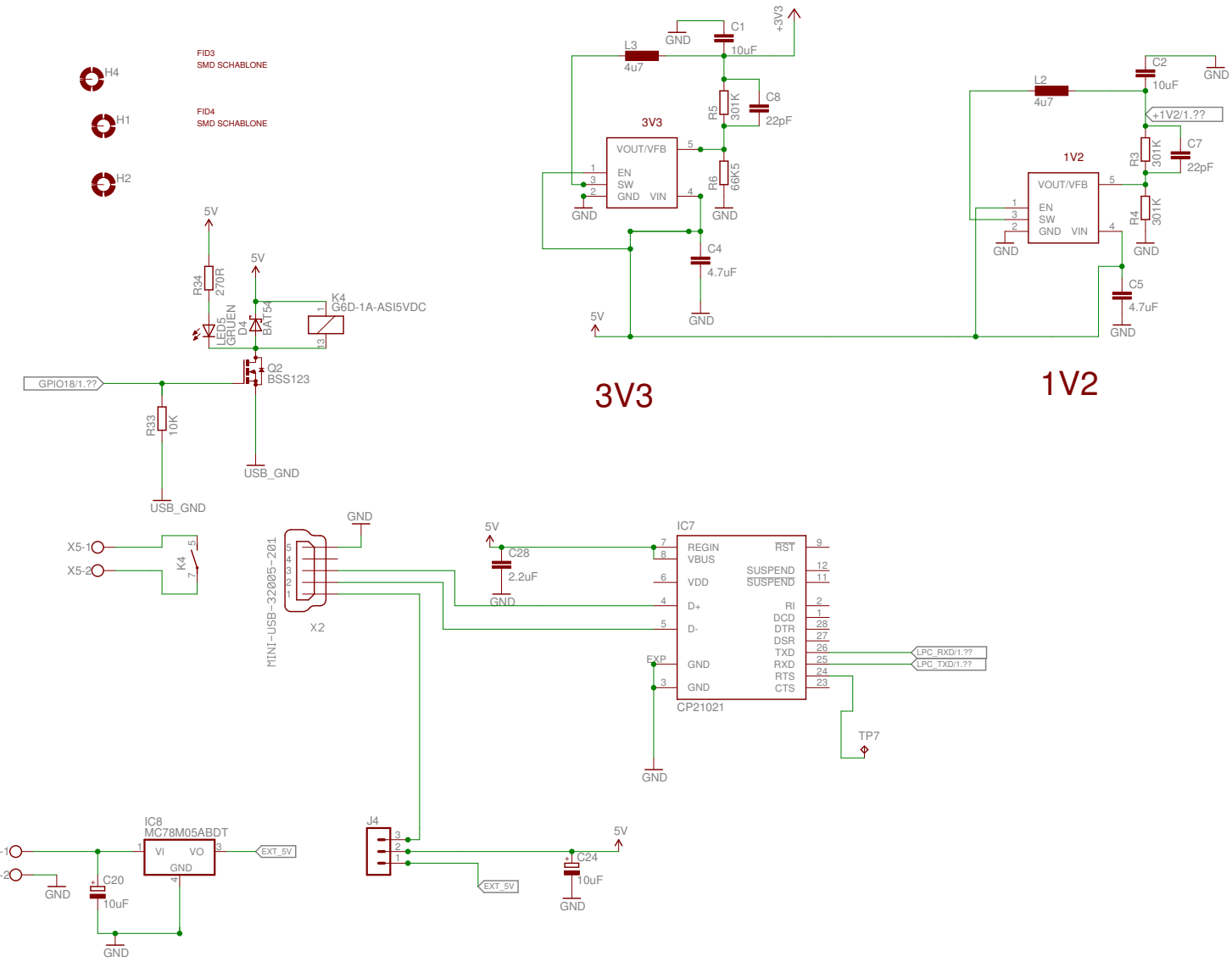

embedded projects GmbH
Holzbachstraße 4
D-86152 Augsburg

TITLE: ElektorLinuxBoard_V3.01

Document Number:

Created by Benedikt Sauter

(cc) creative commons 3.0

REV:

Date: 15.05.13 09:23

Sheet: 2/3

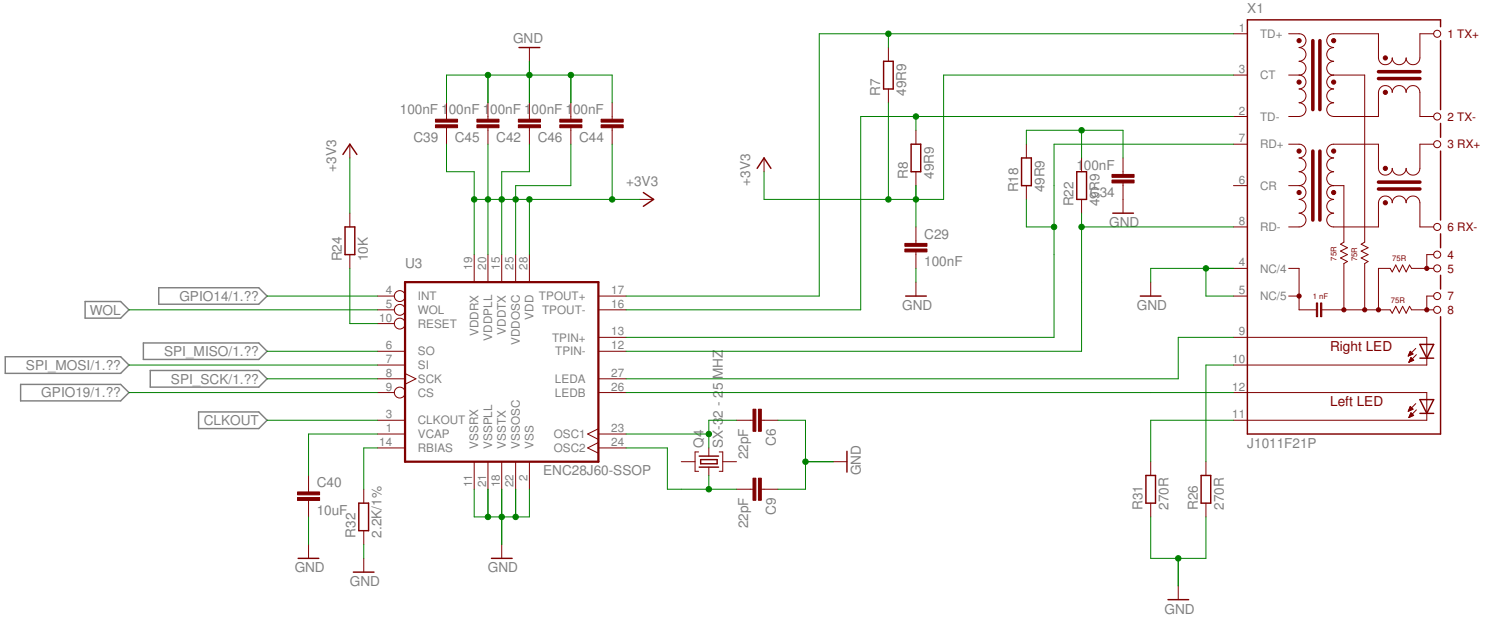

TITLE: ElektorLinuxBoard_V3.01	
Document Number:	REV:
Date: 15.05.13 09:23	Sheet: 3/3