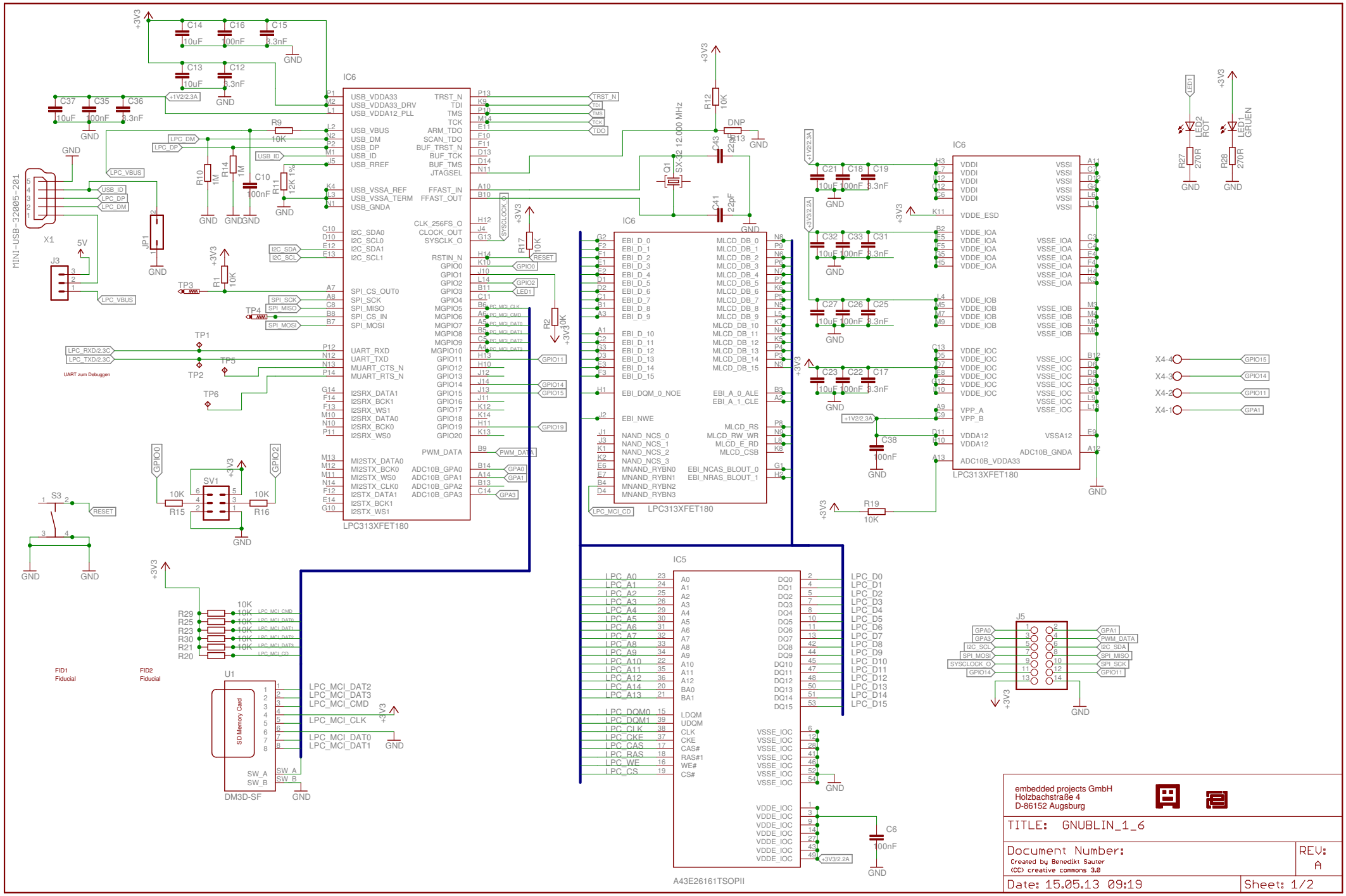
IC6
LPC313XFET180
IC5
A43E26161TSOPII
X1
MINI-USB-32005-201
J3
J5
U1
SD Memory Card
DM3D-SF
SV1
S3
Q1
SX-32 12.000 MHz
UART zum Debuggen
FID1
Fiducial
FID2
Fiducial
embedded projects GmbH
Holzbachstraße 4
D-86152 Augsburg
TITLE: GNUBLIN_1_6
Document Number:
Created by Benedikt Sauter
(CC) creative commons 3.0
REV: A
Date: 15.05.13 09:19
Sheet: 1/2

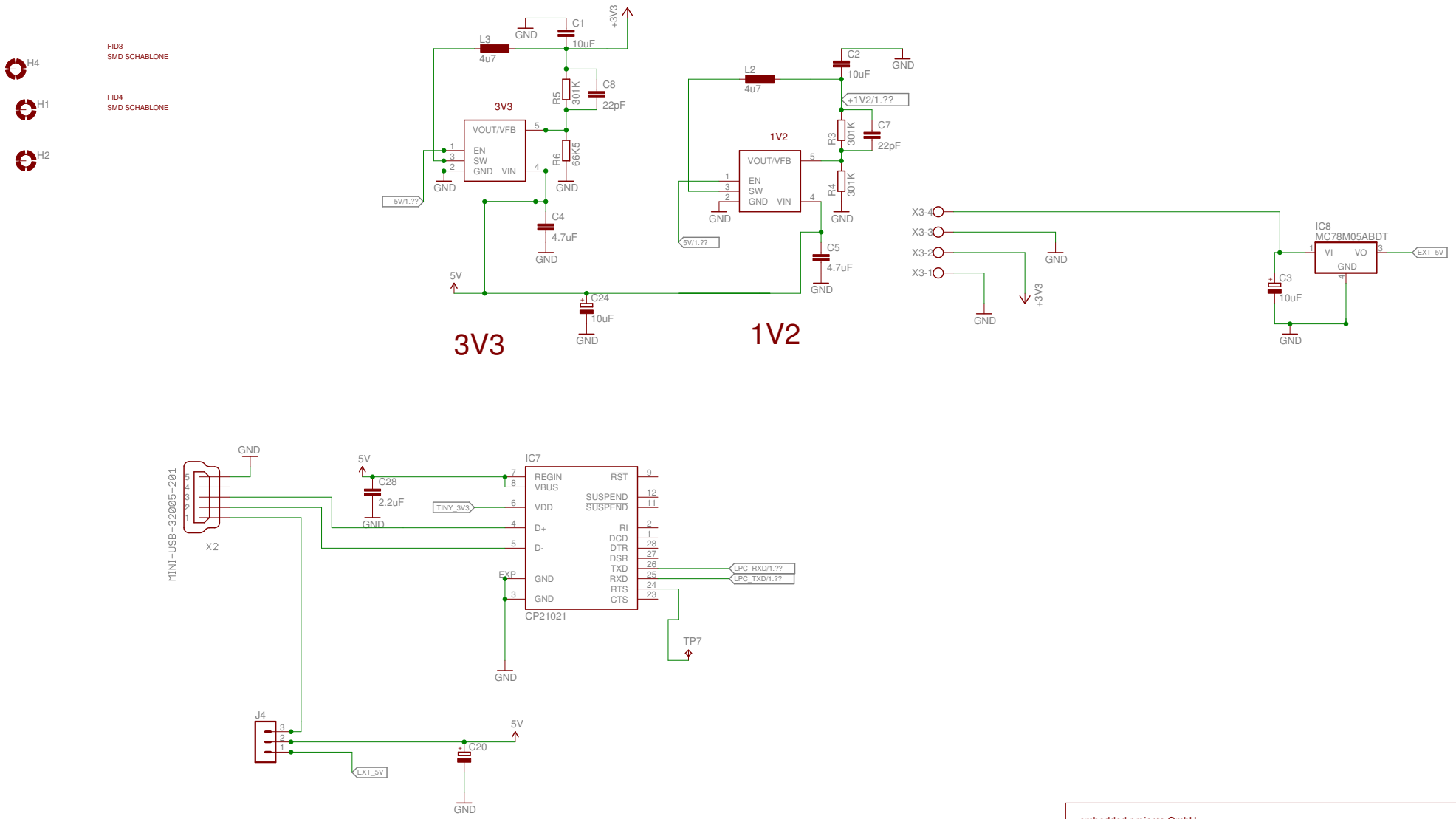

embedded projects GmbH
Holzbachstraße 4
D-86152 Augsburg

TITLE: GNUBLIN_1_6

Document Number:

Created by Benedikt Sauter
(CC) creative commons 3.0

REV:

Date: 15.05.13 09:19

Sheet: 2/2