# EANCOM® 2002 S3

# ORDRSP

# Purchase order response message

# Edition 2014

2. Message Structure Chart ..... 4
3. Branching Diagram..... 7
4. Segments Description ..... 19
5. Segments Layout..... 27
6. Example(s) ..... 143

## 1. Introduction

**Status**

MESSAGE TYPE : ORDRSP

REFERENCE DIRECTORY : D.01B

EANCOM® SUBSET VERSION : 009

**Definition**

A message from a supplier to a buyer, responding to a Purchase Order message or a Purchase Order Change Request message.

**Principles**

A supplier may respond for one or more goods items or services.

The response may be:

- an acknowledgement of receipt and understanding of data content of the Purchase Order,
- a confirmation of acceptance of the Purchase Order,
- a proposal of amendment to the Purchase Order,
- a notification of non-acceptance for all or part of the Purchase Order.

A Purchase Order Response may refer to goods items or services related to one or more delivery schedules, call-offs, etc.

A Purchase Order Response for cross-border transactions may contain additional information for customs and/or statistical purposes.

A Purchase Order Response may contain details for transport and destination as well as delivery patterns.

A buyer's Purchase Order may be responded to by one or more response messages, according to business practice.

### Description of the message

For guidance, the following principles serve to remove ambiguity in the application of an EDI Purchase Order Response.

1. Under accepted commercial practice in many industries, a Purchase Order, subsequent to being received by the supplier, is acknowledged by a response document indicating the supplier's acceptance of all, or part, or none of the buyer's order, and indicating where appropriate any changes requested to be made to the Purchase Order by the supplier to fulfil that order.

   Any change requested by the supplier to a Purchase Order may be acknowledged by the buyer by transmitting a new Purchase Order or a Purchase Order Change Request. Agreement on exact procedures should be reached between trading partners and this agreement may be included in the interchange agreement.

   When acknowledging a Purchase Order Response, the new Purchase Order or the Purchase Order Change Request will refer to the original Purchase Order. The new Purchase Order or Purchase Order Change Request will modify the original Purchase Order data when relevant, taking into account the supplier's reply in the Purchase Order Response.

2. Acknowledgement, confirmation and proposed amendments may be mixed within the message by using the appropriate identifier in the BGM and LIN segments.

3. The only segments and data elements required in the Purchase Order Response are those:

## 1. Introduction

- Marked in the branching diagram of the Purchase Order as mandatory, including the two repetitions of NAD identifying the buyer and the supplier.

- Changing the previous instructions, adding clarification or any other terms, in the heading section or detail section. If segments below LIN are changed then all segments below LIN must be re-transmitted. It is not an error to re-transmit unchanged data.

## 2. Message Structure Chart

**Purchase Order Response Heading Section**

| | | | | | |
|---|---|---|---|---|---|
| UNH | | 1 | M | 1 | - Message header |
| BGM | | 2 | M | 1 | - Beginning of message |
| DTM | | 3 | M | 35 | - Date/time/period |
| PAI | | 4 | C | 1 | - Payment instructions |
| ALI | | 5 | C | 5 | - Additional information |
| FTX | | 6 | C | 99 | - Free text |
| SG1 | | | C | 9999 | - RFF-DTM |
| RFF | | 7 | M | 1 | - Reference |
| DTM | | 8 | C | 5 | - Date/time/period |
| SG3 | * | | C | 99 | - NAD-LOC-FII-SG4-SG6 |
| NAD | | 9 | M | 1 | - Name and address |
| LOC | | 10 | C | 25 | - Place/location identification |
| FII | + | 11 | C | 5 | - Financial institution information |
| SG4 | | | C | 99 | - RFF |
| RFF | | 12 | M | 1 | - Reference |
| SG6 | | | C | 5 | - CTA-COM |
| CTA | | 13 | M | 1 | - Contact information |
| COM | | 14 | C | 5 | - Communication contact |
| SG7 | | | C | 5 | - TAX-MOA |
| TAX | | 15 | M | 1 | - Duty/tax/fee details |
| MOA | | 16 | C | 1 | - Monetary amount |
| SG8 | | | C | 5 | - CUX-DTM |
| CUX | | 17 | M | 1 | - Currencies |
| DTM | | 18 | C | 5 | - Date/time/period |
| SG9 | | | C | 10 | - PAT-DTM-PCD-MOA |
| PAT | X | 19 | M | 1 | - Payment terms basis |
| DTM | | 20 | C | 5 | - Date/time/period |
| PCD | | 21 | C | 1 | - Percentage details |
| MOA | | 22 | C | 1 | - Monetary amount |
| SG10 | | | C | 10 | - TDT-SG11 |
| TDT | | 23 | M | 1 | - Details of transport |
| SG11 | * | | C | 10 | - LOC-DTM |
| LOC | | 24 | M | 1 | - Place/location identification |
| DTM | + | 25 | C | 5 | - Date/time/period |
| SG12 | | | C | 5 | - TOD-LOC |
| TOD | | 26 | M | 1 | - Terms of delivery or transport |
| LOC | | 27 | C | 2 | - Place/location identification |
| SG13 | + | | C | 99 | - PAC-MEA-SG14 |
| PAC | + | 28 | M | 1 | - Package |
| MEA | | 29 | C | 5 | - Measurements |
| SG14 | + | | C | 99 | - PCI-RFF-DTM-GIN |
| PCI | + | 30 | M | 1 | - Package identification |
| RFF | + | 31 | C | 1 | - Reference |
| DTM | + | 32 | C | 5 | - Date/time/period |
| GIN | + | 33 | C | 99 | - Goods identity number |
| SG15 | + | | C | 10 | - EQD |
| EQD | + | 34 | M | 1 | - Equipment details |
| SG19 | | | C | 99 | - ALC-ALI-DTM-SG20-SG21-SG22-SG23-SG24 |
| ALC | | 35 | M | 1 | - Allowance or charge |
| ALI | | 36 | C | 5 | - Additional information |
| DTM | | 37 | C | 5 | - Date/time/period |
| SG20 | | | C | 1 | - QTY-RNG |
| QTY | | 38 | M | 1 | - Quantity |
| RNG | | 39 | C | 1 | - Range details |
| SG21 | | | C | 1 | - PCD-RNG |
| PCD | | 40 | M | 1 | - Percentage details |
| RNG | | 41 | C | 1 | - Range details |

## 2. Message Structure Chart

| | | | | | |
|---|---|---|---|---|---|
| SG22 | | | C | 2 | - MOA-RNG |
| MOA | | 42 | M | 1 | - Monetary amount |
| RNG | | 43 | C | 1 | - Range details |
| SG23 | | | C | 1 | - RTE-RNG |
| RTE | | 44 | M | 1 | - Rate details |
| RNG | | 45 | C | 1 | - Range details |
| SG24 | | | C | 5 | - TAX-MOA |
| TAX | | 46 | M | 1 | - Duty/tax/fee details |
| MOA | | 47 | C | 1 | - Monetary amount |

**Purchase Order Response Detail Section**

| | | | | | |
|---|---|---|---|---|---|
| SG26 | | | C | 200000 | - LIN-PIA-IMD-MEA-QTY-ALI-DTM-MOA-GIN-QVR-FTX-SG30-SG31- |
| LIN | | 48 | M | 1 | - Line item |
| PIA | | 49 | C | 25 | - Additional product id |
| IMD | | 50 | C | 99 | - Item description |
| MEA | | 51 | C | 99 | - Measurements |
| QTY | | 52 | C | 99 | - Quantity |
| ALI | + | 53 | C | 5 | - Additional information |
| DTM | | 54 | C | 35 | - Date/time/period |
| MOA | | 55 | C | 10 | - Monetary amount |
| GIN | | 56 | C | 1000 | - Goods identity number |
| QVR | | 57 | C | 1 | - Quantity variances |
| FTX | | 58 | C | 99 | - Free text |
| SG30 | * | | C | 25 | - PRI-CUX-DTM |
| PRI | | 59 | M | 1 | - Price details |
| CUX | | 60 | C | 1 | - Currencies |
| DTM | + | 61 | C | 5 | - Date/time/period |
| SG31 | | | C | 9999 | - RFF-DTM |
| RFF | | 62 | M | 1 | - Reference |
| DTM | | 63 | C | 5 | - Date/time/period |
| SG32 | * | | C | 99 | - PAC-MEA-QTY-SG34 |
| PAC | | 64 | M | 1 | - Package |
| MEA | | 65 | C | 5 | - Measurements |
| QTY | + | 66 | C | 5 | - Quantity |
| SG34 | | | C | 99 | - PCI-RFF-DTM-GIN |
| PCI | | 67 | M | 1 | - Package identification |
| RFF | | 68 | C | 1 | - Reference |
| DTM | | 69 | C | 5 | - Date/time/period |
| GIN | | 70 | C | 99 | - Goods identity number |
| SG35 | | | C | 9999 | - LOC-QTY-DTM |
| LOC | | 71 | M | 1 | - Place/location identification |
| QTY | | 72 | C | 1 | - Quantity |
| DTM | | 73 | C | 5 | - Date/time/period |
| SG36 | | | C | 10 | - TAX-MOA |
| TAX | | 74 | M | 1 | - Duty/tax/fee details |
| MOA | | 75 | C | 1 | - Monetary amount |
| SG37 | | | C | 999 | - NAD-SG40 |
| NAD | | 76 | M | 1 | - Name and address |
| SG40 | | | C | 5 | - CTA-COM |
| CTA | | 77 | M | 1 | - Contact information |
| COM | | 78 | C | 5 | - Communication contact |
| SG41 | | | C | 99 | - ALC-ALI-DTM-SG42-SG43-SG44-SG45-SG46 |
| ALC | | 79 | M | 1 | - Allowance or charge |
| ALI | | 80 | C | 5 | - Additional information |
| DTM | | 81 | C | 5 | - Date/time/period |
| SG42 | | | C | 1 | - QTY-RNG |
| QTY | | 82 | M | 1 | - Quantity |
| RNG | | 83 | C | 1 | - Range details |
| SG43 | | | C | 1 | - PCD-RNG |

## 2. Message Structure Chart

| | | | | |
|---|---|---|---|---|
| PCD | 84 | M | 1 | - Percentage details |
| RNG | 85 | C | 1 | - Range details |
| SG44 | | C | 2 | - MOA-RNG |
| MOA | 86 | M | 1 | - Monetary amount |
| RNG | 87 | C | 1 | - Range details |
| SG45 | | C | 1 | - RTE-RNG |
| RTE | 88 | M | 1 | - Rate details |
| RNG | 89 | C | 1 | - Range details |
| SG46 | | C | 5 | - TAX-MOA |
| TAX | 90 | M | 1 | - Duty/tax/fee details |
| MOA | 91 | C | 1 | - Monetary amount |
| SG47 | | C | 10 | - TDT |
| TDT | 92 | M | 1 | - Details of transport |

**Purchase Order Response Summary Section**

| | | | | |
|---|---|---|---|---|
| UNS | 93 | M | 1 | - Section control |
| MOA | 94 | C | 12 | - Monetary amount |
| CNT | 95 | C | 10 | - Control total |
| UNT | 96 | M | 1 | - Message trailer |

## 3. Branching Diagram

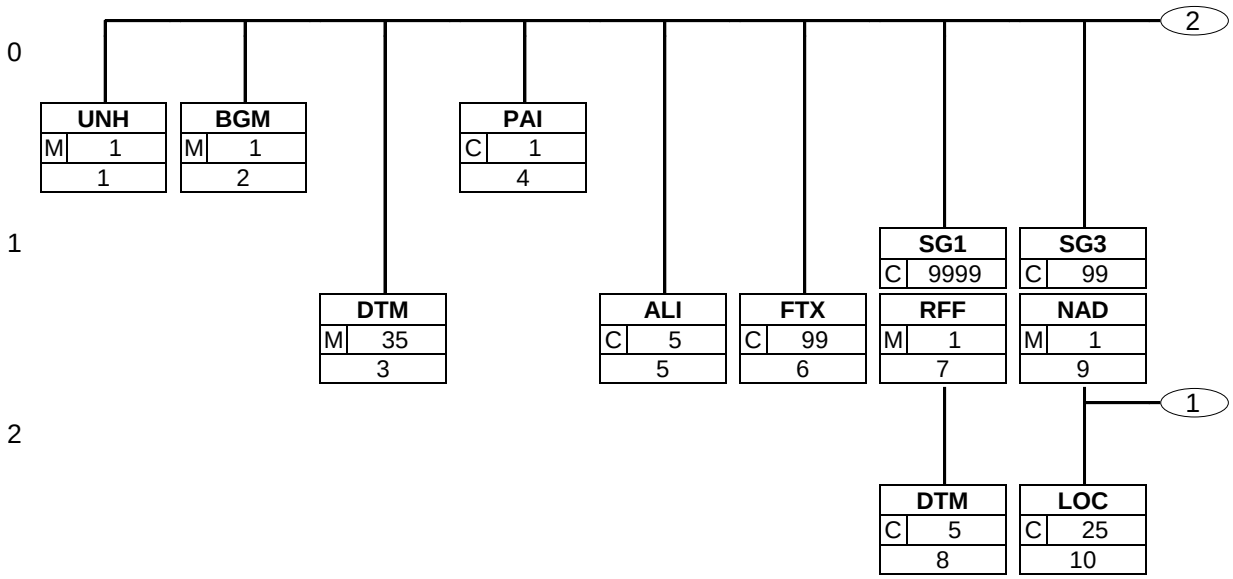

## 3. Branching Diagram

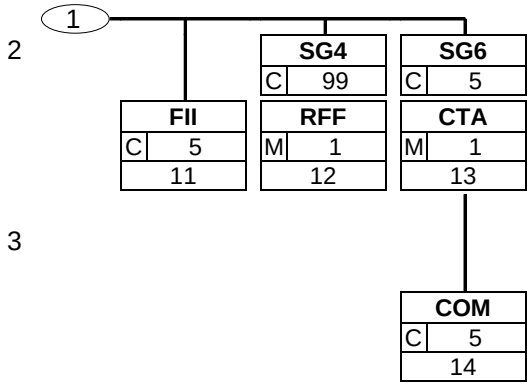

## 3. Branching Diagram

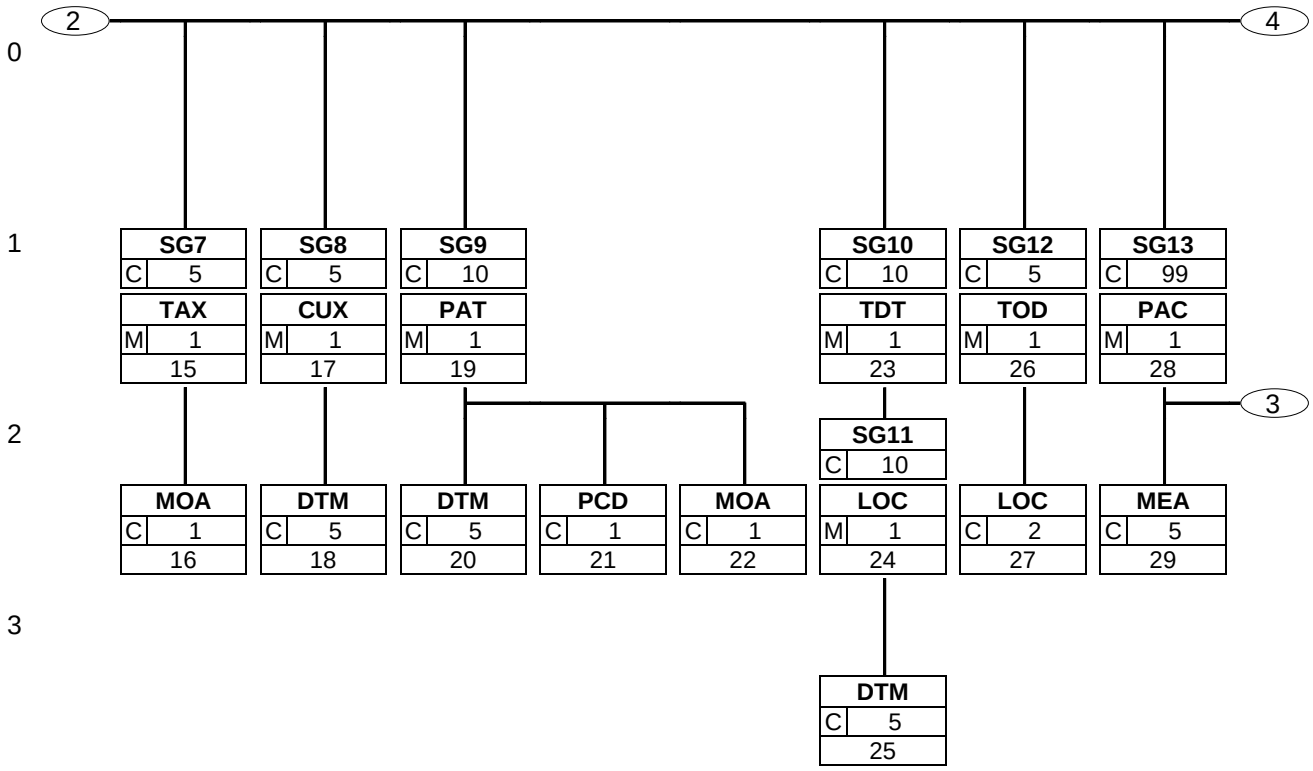

## 3. Branching Diagram

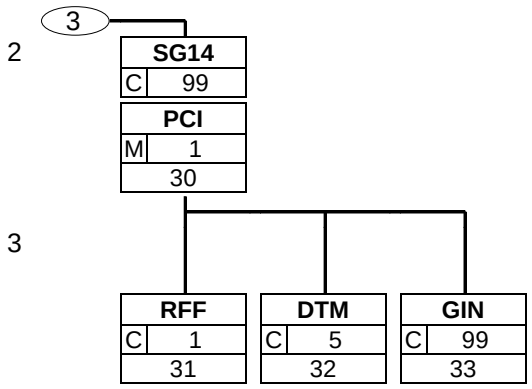

## 3. Branching Diagram

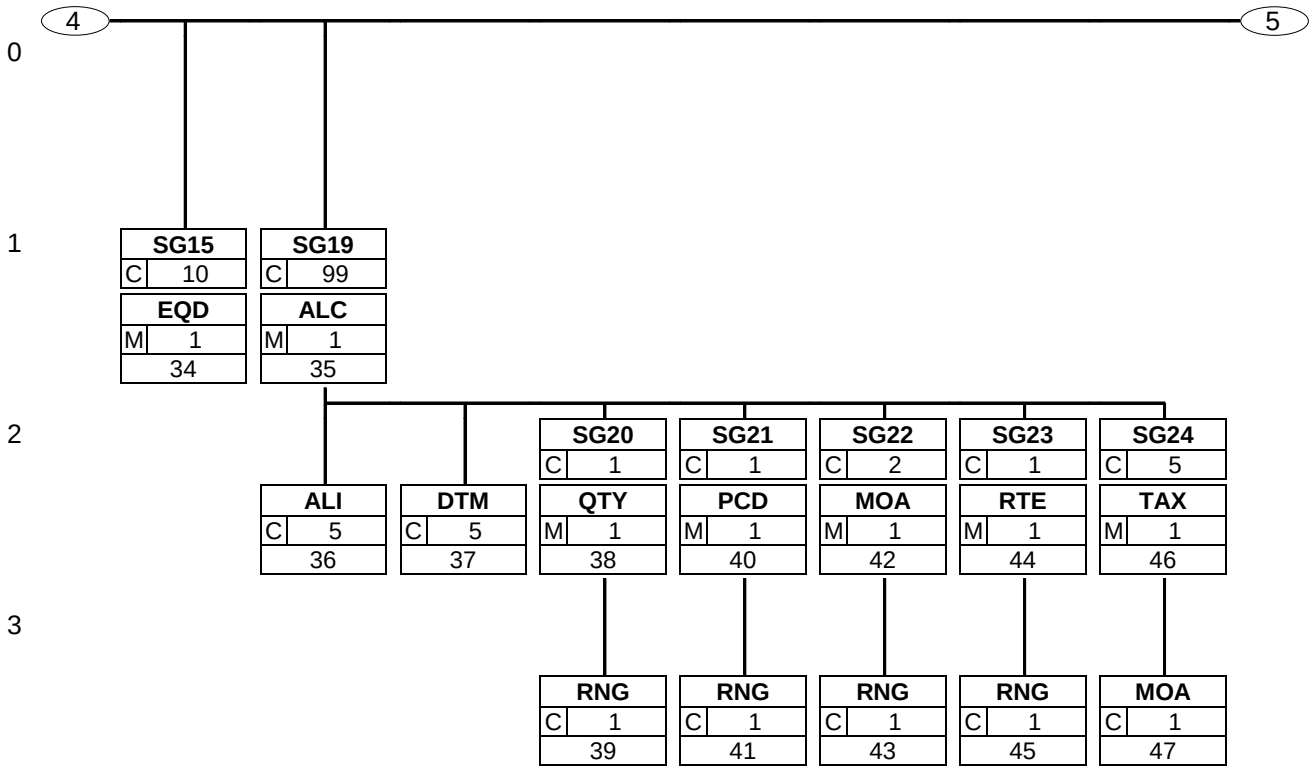

## 3. Branching Diagram

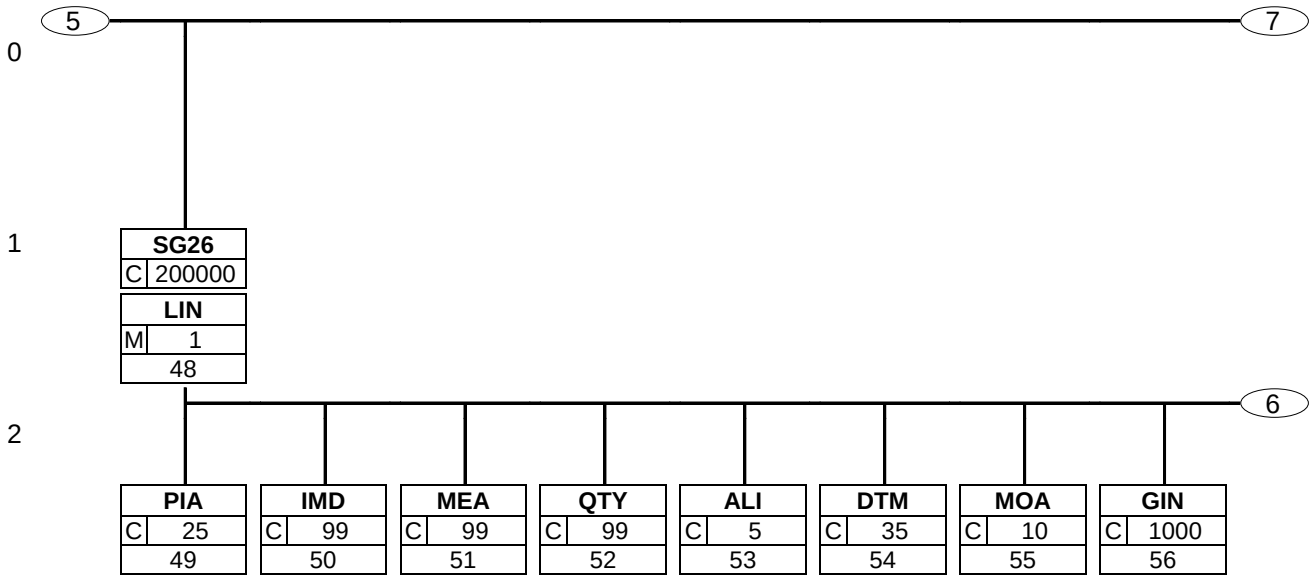

## 3. Branching Diagram

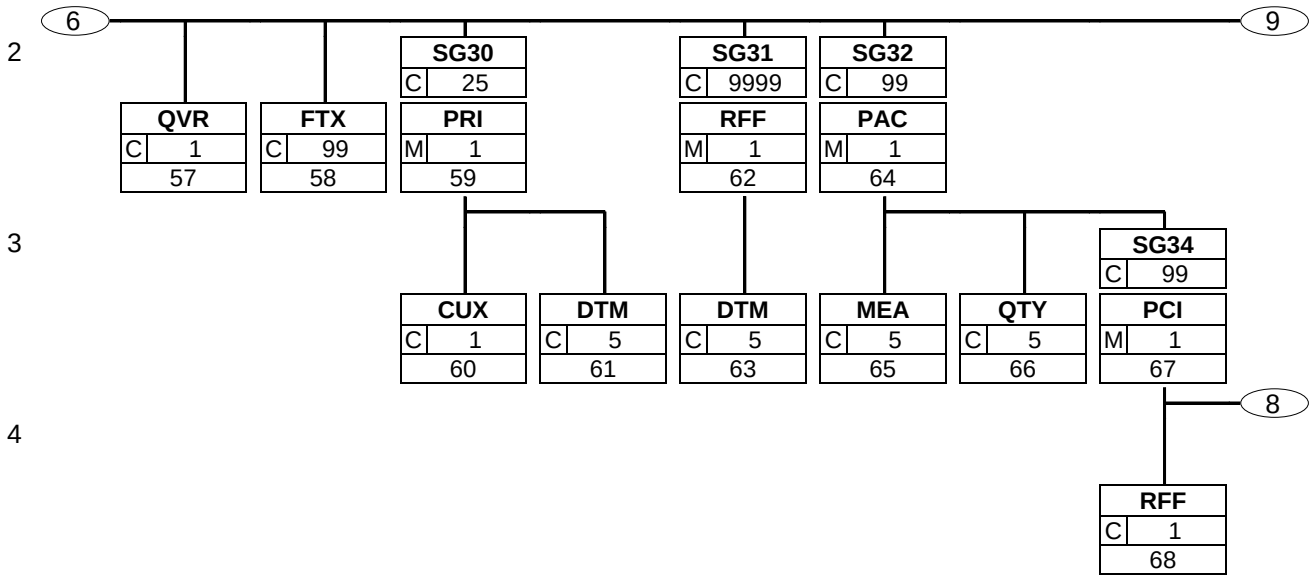

## 3. Branching Diagram

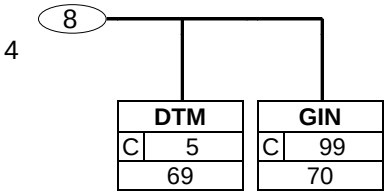

## 3. Branching Diagram

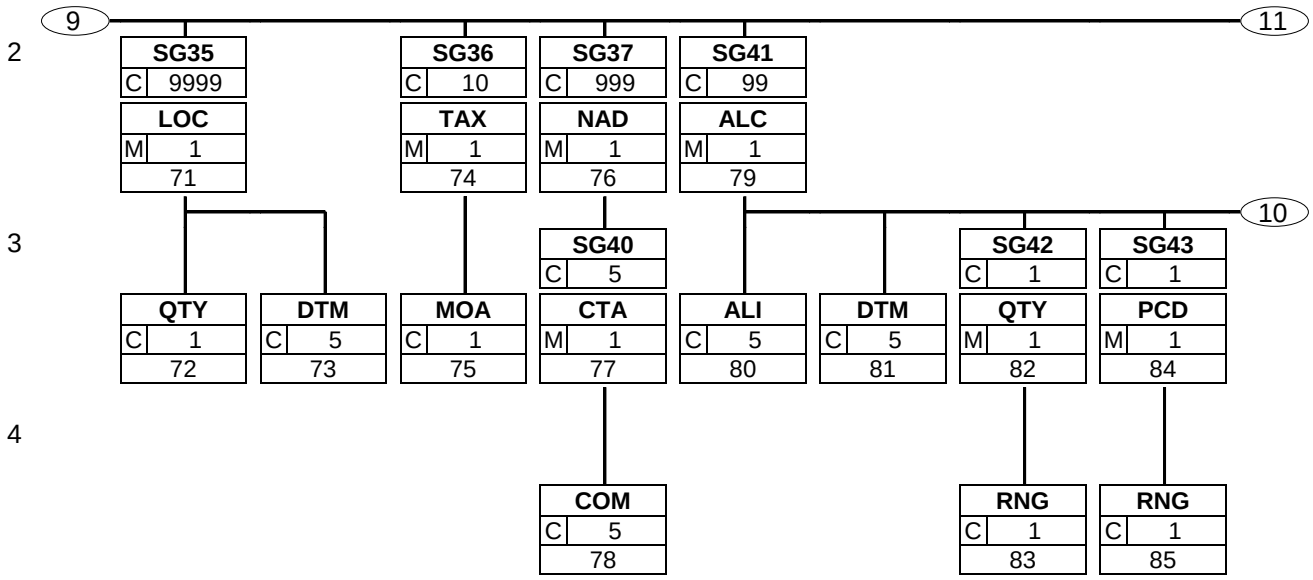

## 3. Branching Diagram

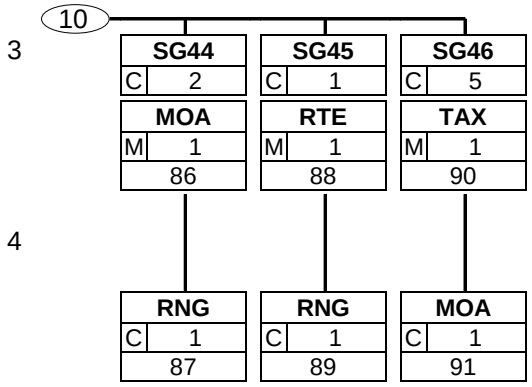

## 3. Branching Diagram

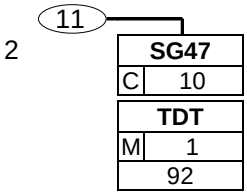

## 3. Branching Diagram

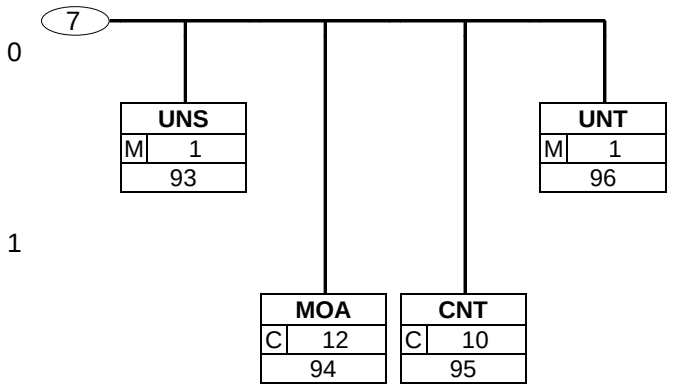

## 4. Segments Description

**Purchase Order Response Heading Section**

| | | | |
|---|---|---|---|
| UNH | - M | 1 | - Message header<br>This segment is used to head, identify and specify a message. |
| BGM | - M | 1 | - Beginning of message<br>This segment is used to indicate the type and function of a message and to transmit the identifying number. |
| DTM | - M | 35 | - Date/time/period<br>This segment is used to specify dates/times relating to the Purchase Order Response, or if required, dates relating to the delivery or collection of the goods. |
| PAI | - C | 1 | - Payment instructions<br>This segment is used to indicate payment instructions, which may be used or imposed by the party issuing the order. |
| ALI | - C | 5 | - Additional information<br>This segment is used to specify any additional information related to the complete purchase order response message. |
| FTX | - C | 99 | - Free text<br>This segment is used to provide any free text information related to the complete purchase order response message. |
| **SG1** | - C | 9999 | - **RFF-DTM**<br>A group of segments for giving references and where necessary, their dates, relating to the whole message, e.g. contract number, import/export licence number, reservation number. |
| RFF | - M | 1 | - Reference<br>This segment is used to refer to the Purchase Order or Purchase Order Change Request to which the Purchase Order Response is responding. |
| DTM | - C | 5 | - Date/time/period<br>This segment is used to specify dates relating to the references given in the preceding RFF segment. |
| **SG3** | - C | 99 | - **NAD-LOC-FII-SG4-SG6**<br>A group of segments identifying the parties with associated information. |
| NAD | - M | 1 | - Name and address<br>This segment is used to identify the trading partners involved in the Purchase Order Response. Identification of the buyer and supplier of goods and services is mandatory using DE's 3035 and C082. Additional parties can be identified as a clarification or correction to a previously sent Purchase Order or Purchase Order Change Request. |
| LOC | - C | 25 | - Place/location identification<br>This segment is used to indicate any location related to the party specified in the NAD segment. |
| FII | - C | 5 | - Financial institution information<br>The segment is used to identify financial institution information related to the party identified in the NAD segment. |
| **SG4** | - C | 99 | - **RFF**<br>A group of segments giving references only relevant to the specified party rather than the whole order response. |
| RFF | - M | 1 | - Reference<br>This segment is used to specify references related to the party specified in the previous NAD segment. |

## 4. Segments Description

**SG6** - C 5 - **CTA-COM**

A group of segments giving contact details of the specific person or department within the party identified in the NAD segment.

CTA - M 1 - Contact information

This segment is used to identify contact details for the party specified in the NAD segment.

COM - C 5 - Communication contact

This segment identifies the communications number, and type of communications, for the person or department identified in the preceding CTA segment.

**SG7** - C 5 - **TAX-MOA**

A group of segments specifying tax related information.

TAX - M 1 - Duty/tax/fee details

This segment is used in the Purchase Order Response to provide a correction or clarification to previously sent tax information.

MOA - C 1 - Monetary amount

This segment is used to indicate tax amounts for the previous TAX segment.

**SG8** - C 5 - **CUX-DTM**

A group of segments specifying the currencies and related dates/periods valid for the whole order response.

CUX - M 1 - Currencies

This segment is used to specify currency information for the complete purchase order response.

DTM - C 5 - Date/time/period

This segment is used to specify dates related to the previous CUX segment.

**SG9** - C 10 - **PAT-DTM-PCD-MOA**

A group of segments specifying the terms of payment applicable for the whole order response.

PAT - M 1 - Payment terms basis

This segment is used by the issuer of the order response to indicate terms of payment which are particular to the currently referenced order only.

DTM - C 5 - Date/time/period

This segment is used to specify any dates associated with the payment terms.

PCD - C 1 - Percentage details

This segment is used to specify percentages related to the payment terms.

MOA - C 1 - Monetary amount

This segment is used to specify monetary values related to the payment terms.

**SG10** - C 10 - **TDT-SG11**

A group of segments identifying the mode and means of transport, location and relevant dates and times for transportation, relating to the whole order response.

TDT - M 1 - Details of transport

This segment is used in the Purchase Order Response to provide a change or correction to the transportation information provided in a previous Purchase Order or Purchase Order Change Request.

**SG11** - C 10 - **LOC-DTM**

A group of segments giving the location and date/time information relative to the transportation.

LOC - M 1 - Place/location identification

This segment is used to specify any locations related to the TDT segment.

## 4. Segments Description

| | | | |
|---|---|---|---|
| DTM | - C | 5 | - Date/time/period<br>This segment is used to provide dates related to the transport details specified in the TDT segment. |
| **SG12** | - C | 5 | - **TOD-LOC**<br>A group of segments indicating the terms of delivery for the whole order response. |
| TOD | - M | 1 | - Terms of delivery or transport<br>This segment is used in the Purchase Order Response to provide a change or correction to the terms of delivery information provided in a previous Purchase Order or Purchase Order Change Request. |
| LOC | - C | 2 | - Place/location identification<br>This segment is used to identify a location related to the terms of delivery. |
| **SG13** | - C | 99 | - **PAC-MEA-SG14**<br>A group of segments identifying the packaging, and marks and numbers for goods referenced by the whole order response. |
| PAC | - M | 1 | - Package<br>This segment is used to specify the number and type of packages for the whole message. |
| MEA | - C | 5 | - Measurements |
| **SG14** | - C | 99 | - **PCI-RFF-DTM-GIN**<br>A group of segments specifying the markings and labels on individual physical units. |
| PCI | - M | 1 | - Package identification<br>This segment is used to identify markings on the packaging of the product being invoiced. |
| RFF | - C | 1 | - Reference<br>This segment is used to specify any references, which relate to the package identification, e.g. master label number. |
| DTM | - C | 5 | - Date/time/period<br>This segment is used to specify dates relating to the references given in the preceding RFF segment. |
| GIN | - C | 99 | - Goods identity number<br>This segment is used to provide identification numbers relevant to the packaging unit and level identified in the PAC segment. |
| **SG15** | - C | 10 | - **EQD**<br>A group of segments providing information relating to equipment identification and ownership, relating to the whole order response. |
| EQD | - M | 1 | - Equipment details<br>This segment is used to provide information on equipment which will be used in the despatch of the products ordered. |
| **SG19** | - C | 99 | - **ALC-ALI-DTM-SG20-SG21-SG22-SG23-SG24**<br>A group of segments specifying allowances and charges for the whole order response. Allowances and charges in the heading section of a message are independent from those in the detail section, e.g. ALC at detail level does not override ALC at heading level. |
| ALC | - M | 1 | - Allowance or charge<br>This segment is used to specify any allowances or charges related to the complete order response. |
| ALI | - C | 5 | - Additional information<br>This segment is used to indicate any special conditions related to the allowances and/or charges specified in the ALC segment. |

## 4. Segments Description

DTM - C 5 - Date/time/period

This segment is used to indicate any dates related to the allowances or/charges information specified in the ALC segment.

**SG20** - C 1 - **QTY-RNG**

A group of segments specifying the quantity of the allowance or charge with its measure unit specifier. A range to which the allowance or charge applies may be specified, e.g. an allowance of a free quantity of 20 pieces may be specified if the goods quantity ordered is greater than 1000 pieces.

QTY - M 1 - Quantity

This segment is used to specify quantity allowance/charge information.

RNG - C 1 - Range details

This segment is used to specify ranges, which apply to the previous QTY segment.

**SG21** - C 1 - **PCD-RNG**

A group of segments specifying the percentage for the allowance or charge, e.g. The allowance/charge amount is calculated as 5% of the goods value or a price reduction of 5% may be specified if the goods quantity ordered is within the range 5 tons to 10 tons.

PCD - M 1 - Percentage details

This segment is used to specify percentage allowance/charge information.

RNG - C 1 - Range details

This segment is used to specify ranges, which apply to the previous PCD segment.

**SG22** - C 2 - **MOA-RNG**

A group of segments specifying a monetary amount for an allowance or charge. A range to which the allowance or charge applies can be specified, e.g. an allowance of 5000 EUR may be specified if goods value ordered is greater than 100000 EUR.

MOA - M 1 - Monetary amount

This segment is used to specify monetary amount allowance/charge information.

RNG - C 1 - Range details

This segment is used to specify ranges, which apply to the previous MOA segment.

**SG23** - C 1 - **RTE-RNG**

A group of segments specifying the rate per unit and basis to which the allowance or charge applies, e.g. The allowance/charge amount is 3 EUR per 10 tons.

RTE - M 1 - Rate details

This segment is used to specify rate allowance/charge information.

RNG - C 1 - Range details

This segment is used to specify ranges, which apply to the previous RTE segment.

**SG24** - C 5 - **TAX-MOA**

A group of segments specifying tax related information for the allowance or charge.

TAX - M 1 - Duty/tax/fee details

This segment is used to specify tax information related to the allowance or charge information for the full message.

MOA - C 1 - Monetary amount

This segment is used to specify monetary amounts related to the tax segment.

**Purchase Order Response Detail Section**

**SG26** - C 200000 - **LIN-PIA-IMD-MEA-QTY-ALI-DTM-MOA-GIN-QVR-FTX-SG30-SG31-SG32-SG35-SG36-SG37-SG41-SG47**

A group of segments providing details of the individual ordered items. This Segment group may be repeated to give sub-line details.

## 4. Segments Description

| | | | |
|---|---|---|---|
| LIN | - M | 1 | - Line item<br>This segment is used to identify the product being responded to by means of an GTIN. |
| PIA | - C | 25 | - Additional product id<br>This segment is used to specify additional or substitutional item identification codes such as a buyers, or sellers item number. |
| IMD | - C | 99 | - Item description<br>This segment is used to describe the current line item. |
| MEA | - C | 99 | - Measurements<br>This segment is used to specify the actual physical dimensions of the product being ordered where that product is sold in variable lengths or volumes. |
| QTY | - C | 99 | - Quantity<br>This segment is used to specify quantity information related to the current line item. |
| ALI | - C | 5 | - Additional information<br>This segment is used to specify any additional information related to the current line item. |
| DTM | - C | 35 | - Date/time/period<br>This segment is used to specify any dates related to the current line item. |
| MOA | - C | 10 | - Monetary amount<br>This segment can be used for two purposes, firstly, when allowances/charges are involved, to indicate net amounts for the line, and secondly, to provide valuation amounts, e.g., customs value. |
| GIN | - C | 1000 | - Goods identity number<br>This segment is used to indicate individual numbers, or a range of numbers, to be printed on coupons or gift cheques. |
| QVR | - C | 1 | - Quantity variances<br>This segment is used to specify quantity variances and reasons for variances between what was ordered and what is available as specified in the QTY segment at line level. |
| FTX | - C | 99 | - Free text<br>This segment is used to specify any special requirements for the current line item. |
| **SG30** | - C | 25 | - **PRI-CUX-DTM**<br>A group of segments identifying the relevant pricing information for the goods or services ordered. |
| PRI | - M | 1 | - Price details<br>This segment is used to provide price information for the current line item. |
| CUX | - C | 1 | - Currencies<br>This segment is used to specify currency data related to the previous PRI segment. |
| DTM | - C | 5 | - Date/time/period<br>This segment is used to specify the dates (and possibly times) associated with the price of the currently identified product. |
| **SG31** | - C | 9999 | - **RFF-DTM**<br>A group of segments giving references and where necessary, their dates, relating to the line item. |
| RFF | - M | 1 | - Reference<br>This segment is used to specify any references, which are applicable to the current line item only. References stated here will override those specified in the heading section when the same qualifier is used. |

## 4. Segments Description

| | | |
|---|---|---|
| DTM - C 5 | - Date/time/period | |
| | This segment is used to specify dates and times associated with the preceding RFF segment. | |
| **SG32** - C 99 | - **PAC-MEA-QTY-SG34** | |
| | A group of segments identifying the packaging, and marks and numbers for goods referenced in the line item. | |
| PAC - M 1 | - Package | |
| | This segment is used to indicate the packaging details for the current line item. | |
| MEA - C 5 | - Measurements | |
| | This segment is used to specify the actual physical dimensions of the product being ordered where that product is sold in variable lengths or volumes. | |
| QTY - C 5 | - Quantity | |
| | This segment is used to specify the total quantity per pack. | |
| **SG34** - C 99 | - **PCI-RFF-DTM-GIN** | |
| | A group of segments specifying the markings and labels on individual physical units. | |
| PCI - M 1 | - Package identification | |
| | This segment is used to detail markings and labels on the packaging for the current line item. | |
| RFF - C 1 | - Reference | |
| | This segment is used to provide references associated with the PCI segment. | |
| DTM - C 5 | - Date/time/period | |
| | This segment is used to specify dates and times associated with the preceding RFF segment. | |
| GIN - C 99 | - Goods identity number | |
| | This segment is used to indicate numbers, which are to be marked on the packages for the current line item. | |
| **SG35** - C 9999 | - **LOC-QTY-DTM** | |
| | A group of segments specifying destination and quantity details for consignments involving multi destination deliveries. | |
| LOC - M 1 | - Place/location identification | |
| | This segment is used to identify the location of delivery for a split delivery order. | |
| QTY - C 1 | - Quantity | |
| | This segment is used to indicate the delivery quantity for the delivery location specified in the previous LOC segment. The total of all quantities specified in segment group 35 for the line, must equal the value for the total quantity detailed in the QTY segment at line level. | |
| DTM - C 5 | - Date/time/period | |
| | This segment is used to indicate the date, time or period on which the split delivery will take place to the location identified in the LOC segment. | |
| **SG36** - C 10 | - **TAX-MOA** | |
| | A group of segments specifying tax related information. | |
| TAX - M 1 | - Duty/tax/fee details | |
| | This segment is used to identify the type and rate of tax that is applicable for the current line item. This segment is only used if the tax rate at line level differs from the rate specified in the header section. | |
| MOA - C 1 | - Monetary amount | |
| | This segment is used to indicate tax amounts related to the preceding TAX segment. | |

## 4. Segments Description

**SG37** - C 999 - **NAD-SG40**

A group of segments identifying the parties with associated information, relevant to the line item only.

NAD - M 1 - Name and address

This segment is used to specify the ultimate (end) customer for the current line item, i.e., the party sending the order will in turn sell the goods to, or the party on whose behalf the buyer is acting as an agent.

**SG40** - C 5 - **CTA-COM**

A group of segments giving contact details of the specific person or department within the party identified in the NAD segment.

CTA - M 1 - Contact information

This segment is used to provide contact and communications information for the ultimate customer identified in the NAD segment.

COM - C 5 - Communication contact

This segment is used to identify the communications number and the type of communications used for the person or department identified in the CTA segment.

**SG41** - C 99 - **ALC-ALI-DTM-SG42-SG43-SG44-SG45-SG46**

A group of segments specifying allowances and charges for the line item. Allowances and charges in the heading section of a message are independent from those in the detail section, e.g. ALC at detail level does not override ALC atheading level.

ALC - M 1 - Allowance or charge

This segment is used to specify any allowances or charges for the current line item.

ALI - C 5 - Additional information

This segment is used to indicate any special conditions related to the allowance and/or charge specified in the ALC segment.

DTM - C 5 - Date/time/period

This segment is used to specify any dates which are related to the allowances and/ or charges detailed in the ALC segment.

**SG42** - C 1 - **QTY-RNG**

A group of segments specifying the quantity of the allowance or charge with its measure unit specifier. A range to which the allowance or charge applies may be specified, e.g. an allowance of a free quantity of 20 pieces may be specified if the goods quantity ordered is greater than 1000 pieces.

QTY - M 1 - Quantity

This segment is used to specify quantity allowance/charge information.

RNG - C 1 - Range details

This segment is used to specify ranges, which apply to the previous QTY segment.

**SG43** - C 1 - **PCD-RNG**

A group of segments specifying the percentage for the allowance or charge, e.g. The allowance/charge amount is calculated as 5% of the goods value or a price reduction of 5% may be specified if the goods quantity ordered is within the range 5 tons to 10 tons.

PCD - M 1 - Percentage details

This segment is used to specify percentage allowance/charge information.

RNG - C 1 - Range details

This segment is used to specify ranges, which apply to the previous PCD segment.

## 4. Segments Description

**SG44** - C 2 - **MOA-RNG**

A group of segments specifying a monetary amount for an allowance or charge. A range to which the allowance or charge applies can be specified, e.g. an allowance of 5000 EUR may be specified if goods value ordered is greater than 100000 EUR.

MOA - M 1 - Monetary amount

This segment is used to specify monetary amount allowance/charge information.

RNG - C 1 - Range details

This segment is used to specify ranges, which apply to the previous MOA segment.

**SG45** - C 1 - **RTE-RNG**

A group of segments specifying the rate per unit and basis to which the allowance or charge applies, e.g. The allowance/charge amount is 3 EUR per 10 tons.

RTE - M 1 - Rate details

This segment is used to specify rate allowance/charge information.

RNG - C 1 - Range details

This segment is used to specify ranges which apply to the previous RTE segment.

**SG46** - C 5 - **TAX-MOA**

A group of segments specifying tax related information for the allowance or charge.

TAX - M 1 - Duty/tax/fee details

This segment is used to specify any taxes or duties, which related to the allowance or charge for the current line item.

MOA - C 1 - Monetary amount

This segment is used to specify monetary amounts related to the previous TAX segment.

**SG47** - C 10 - **TDT**

A group of segments identifying the mode and means of transport, relating to the line item, where this is different to or not specified within the heading section.

TDT - M 1 - Details of transport

This segment may be used to specify transport information for the current line item, such as requesting an express transport service. It overrides any transport details specified in the TDT segment at the heading level of the message.

**Purchase Order Response Summary Section**

UNS - M 1 - Section control

This segment is used to separate the detail and summary sections of the message.

MOA - C 12 - Monetary amount

This segment is used to indicate total amounts for the purchase order response.

CNT - C 10 - Control total

This segment is used to provide message control totals.

UNT - M 1 - Message trailer

This segment is a mandatory UN/EDIFACT segment. It must always be the last segment in the message.

## 5. Segments Layout

This section describes each segment used in the EANCOM® Purchase order response message. The original EDIFACT segment layout is listed. The appropriate comments relevant to the EANCOM® subset are indicated.

***Notes:***

1. The segments are presented in the sequence in which they appear in the message. The segment or segment group tag is followed by the (M)andatory / (C)onditional indicator, the maximum number of occurrences and the segment description.

2. Reading from left to right, in column one, the data element tags and descriptions are shown, followed by in the second column the EDIFACT status (M or C), the field format, and the picture of the data elements. These first pieces of information constitute the original EDIFACT segment layout.

   Following the EDIFACT information, EANCOM® specific information is provided in the third, fourth, and fifth columns. In the third column a status indicator for the use of (C)onditional EDIFACT data elements (see 2.1 through 2.3 below), in the fourth column the restricted indicator (see point 3 on the following page), and in the fifth column notes and code values used for specific data elements in the message.

2.1 (M)andatory data elements in EDIFACT segments retain their status in EANCOM®.

2.2 Additionally, there are five types of status for data elements with a (C)onditional EDIFACT status, whether for simple, component or composite data elements. These are listed below and can be identified when relevant by the following abbreviations:

| | | |
|---|---|---|
| - REQUIRED | **R** | Indicates that the entity is required and must be sent. |
| - ADVISED | **A** | Indicates that the entity is advised or recommended. |
| - DEPENDENT | **D** | Indicates that the entity must be sent in certain conditions, as defined by the relevant explanatory note. |
| - OPTIONAL | **O** | Indicates that the entity is optional and may be sent at the discretion of the user. |
| - NOT USED | **N** | Indicates that the entity is not used and should be omitted. |

2.3 If a composite is flagged as **N, NOT USED**, all data elements within that composite will have blank status indicators assigned to them.

3. Status indicators detailed in the fourth column which directly relate to the code values detailed in the fifth **column** may have two values:

| | | |
|---|---|---|
| - RESTRICTED | ***** | A data element marked with an asterisk (*) in the fourth column indicates that the listed codes in column five are the only codes available for use with this data element, in this segment, in this message. |
| - OPEN | | All data elements where coded representation of data is possible and a restricted set of code values is not indicated are open (no asterisk in fourth column). The available codes are listed in the EANCOM® Data Elements and Code Sets Directory. Code values may be given as examples or there may be a note on the format or type of code to be used. |

4. Different colours are used for the code values in the segment details: restricted codes are in red and open codes in blue.

## 5. Segments Layout

Segment number: 1

**UNH** - M 1 - Message header

Function:

A service segment starting and uniquely identifying a message. The message type code for the Purchase order response message is ORDRSP.

Note:
Purchase order response messages conforming to this document must contain the following data in segment UNH, composite S009:

Data element 0065 ORDRSP
0052 D
0054 01B
0051 UN

| | | EDIFACT | GS1 | * | Description |
|---|---|---|---|---|---|
| 0062 | Message reference number | M an..14 | **M** | | Senders unique message reference. Sequence number of the messages in the interchange. DE 0062 in the UNT will be exactly the same. Sender generated. |
| S009 | MESSAGE IDENTIFIER | M | **M** | | |
| 0065 | Message type | M an..6 | **M** | * | ORDRSP = Purchase order response message |
| 0052 | Message version number | M an..3 | **M** | * | D = Draft version/UN/EDIFACT Directory |
| 0054 | Message release number | M an..3 | **M** | * | 01B = Release 2001 - B |
| 0051 | Controlling agency | M an..2 | **M** | * | UN = UN/CEFACT |
| 0057 | Association assigned code | C an..6 | **R** | * | EAN009 = GS1 version control number (GS1 Permanent Code)<br>Indicates that the message is the EANCOM version 009 of the UNSM Purchase Order Response. |
| 0068 | Common access reference | C an..35 | **N** | | |
| S010 | STATUS OF THE TRANSFER | C | **N** | | |
| 0070 | Sequence of transfers | M n..2 | | | |
| 0073 | First and last transfer | C a1 | | | |

Segment Notes:

This segment is used to head, identify and specify a message.
DE's 0065, 0052, 0054, and 0051: Indicate that the message is a UNSM Purchase Order Response based on the D.01B directory under the control of the United Nations.

Example:
UNH+ME000001+ORDRSP:D:01B:UN:EAN009'

## 5. Segments Layout

Segment number: 2

**BGM** - M 1 - Beginning of message

Function:

A segment by which the sender must uniquely identify the order response by means of its number and when necessary its function.

- If the MESSAGE FUNCTION CODE is a "12", "27" or "29" indicating that the total message was not processed, rejected or accepted. No segments, other than mandatory segments, need be used in the message Header, Detail or Summary sections. However for positive reporting purposes all the segments of the ORDERS or ORDCHG message, being responded to, may be used in ORDRSP.

- If the MESSAGE FUNCTION CODE is a "28" indicating an accepted ORDERS or ORDCHG message with amended heading information or "34" indicating amendment in the message, then all segments in the heading section must be used from the ORDRES or ORDCHG message being responded to. This includes both amended and non amended segments.

If the ORDERS message was "NOT PROCESSED"; use of MESSAGE FUNCTION CODE "12" indicates acknowledgement that the transmitted message has been received and understood by the seller, but remains to be processed within his application system.

If the Order or Order Change message was "NOT ACCEPTED"; use of MESSAGE FUNCTION CODE "27" indicates that the seller declines to supply the goods or declines to accept the changes requested in a Purchase Order Change Request.

If the ORDER or ORDER CHANGE message was "ACCEPTED, WITH AMENDMENT IN HEADING SECTION"; use of MESSAGE FUNCTION CODE "28" indicates that the seller accepts to supply the goods or services requested in the Purchase Order (or a Purchase Order Change Request), but requires one or more changes to the terms set out in the referenced message Heading Section.
The complete Heading Section data is transmitted to replace all data previously sent. The Detail Section is considered as acknowledged without change.

If the ORDER or ORDER CHANGE message was "ACCEPTED, WITHOUT AMENDMENT"; use of MESSAGE FUNCTION CODE "29" indicates that the seller according to the terms set out in the Purchase Order or a Purchase Order Change Request accepts to supply the goods or services requested or where appropriate accepts the cancellation.

If the ORDER or ORDER CHANGE message was "ACCEPTED, WITH AMENDMENT IN DETAIL SECTION"; use of MESSAGE FUNCTION CODE "30" indicates that the seller accepts to supply the goods or services requested in the Purchase Order
(or a Purchase Order Change Request), but requires changes in one or more line items (as indicated in the LIN segments). The Heading Section is considered as acknowledged without change If the ORDER or ORDER CHANGE message was "ACCEPTED WITH AMENDMENT"; use of MESSAGE FUNCTION CODE "34" indicates that the seller accepts to supply the goods or services requested in the Purchase Order and Purchase Order Change Request, but requires changes in the Heading as well as Detail Section.

| | | EDIFACT | GS1 | * | Description |
|---|---|---|---|---|---|
| C002 | DOCUMENT/MESSAGE NAME | C | **R** | | |
| 1001 | Document name code | C an..3 | **R** | * | 231 = Purchase order response<br>The Purchase Order Response is transmitted by a supplier in response to a previous Purchase Order or Purchase Order Change Request.<br>All references other than the document number DE 1004 are in the RFF segment. |
| 1131 | Code list identification code | C an..17 | **N** | | |
| 3055 | Code list responsible agency code | C an..3 | **N** | | |

## 5. Segments Layout

| | | | | | |
|---|---|---|---|---|---|
| 1000 | Document name | C an..35 | **O** | | |

## 5. Segments Layout

Segment number: 2

| | | EDIFACT | GS1 | * | Description |
|---|---|---|---|---|---|
| C106 | DOCUMENT/MESSAGE IDENTIFICATION | C | **R** | | |
| 1004 | Document identifier | C an..35 | **R** | | Order Response Number assigned by document sender.<br>For global unique identification of documents Global Document Type Identifier (GDTI) is available. |
| 1056 | Version identifier | C an..9 | **N** | | |
| 1060 | Revision identifier | C an..6 | **O** | | |
| 1225 | Message function code | C an..3 | **R** | * | 4 = Change<br>12 = Not processed<br>27 = Not accepted<br>29 = Accepted without amendment<br>45 = Accepted with reserves<br>When code 45 is used in this position, confirmation is provided at a later stage by issuing a new ORDRSP which once again replies to the original Purchase Order, and also refers to the provisional Purchase Order Response.<br>The message function, coded is a critical element in this segment. The restricted codes detailed in DE 1225 have the following definitions:<br>4 = Change - The supplier accepts to supply the goods or services requested in the Purchase Order or Purchase Order Change Request, but requires changes to one or more of the items.<br>12 = Not processed - The supplier informs the buyer that the referenced message has been received but has not yet been processed completely.<br>27 = Not accepted - The supplier declines to supply the goods detailed in a Purchase Order or Purchase Order Change Request.<br>29 = Accepted without amendment - The supplier accepts to supply the goods or services requested according to the terms set out in the Purchase Order or Purchase Order Change Request. |
| 4343 | Response type code | C an..3 | **D** | * | AC = Acknowledge - with detail and change<br>AI = Acknowledge only changes<br>NA = No acknowledgement needed<br>This DE is used if the seller wishes to explicitly indicate whether an acknowledgement is required or not. |

Segment Notes:

This segment is used to indicate the type and function of a message and to transmit the identifying number.

Example:
BGM+231+ORSP12856+29'

## 5. Segments Layout

Segment number: 3

**DTM** - M 35 - Date/time/period

Function:

A segment specifying general dates and, when relevant, times related to the whole message. The segment must be specified at least once to identify the order response date.

Examples of the use of this DTM segment are: Lead times that apply to the whole of the Order response and, if no schedule is to be specified, the delivery date.

The Date/time/period segment within other Segment groups should be used whenever the date/time/period needs to be logically related to another specified data item. e.g. Payment due date is specified within the PAT Segment group.

| | | EDIFACT | GS1 | * | Description |
|---|---|---|---|---|---|
| C507 | DATE/TIME/PERIOD | M | **M** | | |
| 2005 | Date or time or period function code qualifier | M an..3 | **M** | * | 2 = Delivery date/time, requested<br>11 = Despatch date and/or time<br>17 = Delivery date/time, estimated<br>37 = Ship not before date/time<br>38 = Ship not later than date/time<br>61 = Cancel if not delivered by this date<br>63 = Delivery date/time, latest<br>64 = Delivery date/time, earliest<br>69 = Delivery date/time, promised for<br>71 = Delivery date/time, requested for (after and including)<br>76 = Delivery date/time, scheduled for<br>X14 = Requested for delivery week commencing (GS1 Temporary Code)<br>137 = Document/message date/time<br>200 = Pick-up/collection date/time of cargo<br>223 = Delivery date/time, deferred<br>255 = Availability due date<br>263 = Invoicing period<br>266 = Validation date<br>383 = Cancel if not shipped by this date<br>Code value '266' is used to indicate the date on which the order or order change being responded to was validated.<br>234 = Collection date/time, earliest<br>By including code 234, it will enable the user to support a new concept called Primary Freight, where the buyer is responsible for the pickup of goods from the supplier.This will enable the supplier to specify the earliest time (no earlier than this particular date/time) that thebuyer is allowed to come and pick up the goods by. |
| 2380 | Date or time or period value | C an..35 | **R** | | |
| 2379 | Date or time or period format code | C an..3 | **R** | | 102 = CCYYMMDD<br>203 = CCYYMMDDHHMM<br>616 = CCYYWW<br>718 = CCYYMMDD-CCYYMMDD |

Segment Notes:

This segment is used to specify dates/times relating to the Purchase Order Response, or if required, dates relating to the delivery or collection of the goods.
DE 2005: Identification of the 'Document/message date/time' (code value 137) is mandatory in an EANCOM message.

## 5. Segments Layout

Segment number: 3

Example:
DTM+137:20020830:102'

## 5. Segments Layout

Segment number: 4

| **PAI** | - C | 1 - Payment instructions | | | |
|---|---|---|---|---|---|
| Function:<br>A segment requesting or confirming conditions of payment, guarantee and method of payment for the whole order response An example of the use of this segment is to specify that a documentary credit will be used. | | | | | |
| | | EDIFACT | GS1 | * | Description |
| C534 | PAYMENT INSTRUCTION DETAILS | M | **M** | | |
| 4439 | Payment conditions code | C an..3 | **O** | | 1 = Direct payment<br>OA = Open account (GS1 Temporary Code) |
| 4431 | Payment guarantee means code | C an..3 | **O** | | 20 = Goods as security |
| 4461 | Payment means code | C an..3 | **O** | | 42 = Payment to bank account<br>60 = Promissory note<br>70 = Bill drawn by the creditor on the debtor<br>10E = Payment terms defined in the Commercial Account Summary (GS1 Code) |
| 1131 | Code list identification code | C an..17 | **O** | | |
| 3055 | Code list responsible agency code | C an..3 | **D** | | |
| 4435 | Payment channel code | C an..3 | **O** | | 1 = Ordinary post |
| Segment Notes:<br>This segment is used to indicate payment instructions, which may be used or imposed by the party issuing the order.<br><br>Example:<br>PAI+::42' | | | | | |

## 5. Segments Layout

Segment number: 5

| **ALI** | - C | 5 - Additional information | | | |
|---|---|---|---|---|---|
| Function:<br>A segment indicating special conditions related to the total order response owing to origin, customs preference, or other commercial factors. | | | | | |
| | | EDIFACT | GS1 | * | Description |
| 3239 | Country of origin name code | C an..3 | **O** | | Use ISO 3166 2 alpha code |
| 9213 | Duty regime type code | C an..3 | **O** | | |
| 4183 | Special condition code | C an..3 | **O** | | 6 = Subject to bonus<br>8 = Subject to discount<br>X8 = Provisional (GS1 Code)<br>When the code X8, Provisional is used in this position, it means that the response provided in DE 1225 of the BGM (e.g. accepted, accepted with amendment, etc) is provisional and which is subject to later confirmation. Confirmation is provided at a later stage by issuing a new ORDRSP which once again replies to the original Purchase Order, and also refers to the provisional Purchase Order Response. |
| 4183 | Special condition code | C an..3 | **O** | | |
| 4183 | Special condition code | C an..3 | **O** | | |
| 4183 | Special condition code | C an..3 | **O** | | |
| 4183 | Special condition code | C an..3 | **O** | | |
| Segment Notes:<br>This segment is used to specify any additional information related to the complete purchase order response message.<br><br>Example:<br>ALI+++8' | | | | | |

## 5. Segments Layout

Segment number: 6

**FTX** - C 99 - Free text

Function:

A segment with free text information, in coded or clear form, used when additional information is needed but cannot be accommodated within other segments. In computer to computer exchanges such text will normally require the receiver to process this segment manually.

| | | EDIFACT | GS1 | * | Description |
|---|---|---|---|---|---|
| 4451 | Text subject code qualifier | M an..3 | **M** | | PUR = Purchasing information<br>ZZZ = Mutually defined |
| 4453 | Free text function code | C an..3 | **O** | * | 1 = Text for subsequent use<br>3 = Text for immediate use |
| C107 | TEXT REFERENCE | C | **D** | | References to a standard text.<br>This composite is only used when trading partners have agreed to use mutually defined code values. |
| 4441 | Free text value code | M an..17 | **M** | | 001 = ...standard text... |
| 1131 | Code list identification code | C an..17 | **O** | | |
| 3055 | Code list responsible agency code | C an..3 | **D** | | 91 = Assigned by supplier or supplier's agent<br>92 = Assigned by buyer or buyer's agent |
| C108 | TEXT LITERAL | C | **D** | | This composite is only used if coded text can not be used. |
| 4440 | Free text value | M an..512 | **M** | | |
| 4440 | Free text value | C an..512 | **O** | | |
| 4440 | Free text value | C an..512 | **O** | | |
| 4440 | Free text value | C an..512 | **O** | | |
| 4440 | Free text value | C an..512 | **O** | | |
| 3453 | Language name code | C an..3 | **D** | | ISO 639 two alpha code<br>This data element is only used when non-coded free text has been provided in data element C108. |
| 4447 | Free text format code | C an..3 | **N** | | |

Segment Notes:

This segment is used to provide any free text information related to the complete purchase order response message.
Use of this segment in free form is not recommended since it may inhibit automatic processing of the Order Response. Coded references to standard texts is an available functionality which enables automatic processing and reduces transmission and processing overheads. Standard texts should be mutually defined among trading partners and can be used to cover legal and other requirements.

Example:
FTX+ZZZ+1+001::91'

## 5. Segments Layout

Segment number: 7

| | | | |
|---|---|---|---|
| **SG1** | - C | 9999 | - RFF-DTM |
| **RFF** | - M | 1 | - Reference |

Function:

A segment identifying the reference by its number and where appropriate a line number within a document.

| | | EDIFACT | GS1 | * | Description |
|---|---|---|---|---|---|
| C506 | REFERENCE | M | **M** | | |
| 1153 | Reference code qualifier | M an..3 | **M** | | BO = Blanket order number<br>CR = Customer reference number<br>CT = Contract number<br>IA = Internal vendor number<br>IP = Import licence number<br>IT = Internal customer number<br>ON = Order number (buyer)<br>PD = Promotion deal number<br>POR = Purchase order response number<br>PW = Prior purchase order number<br>UC = Ultimate customer's reference number<br>VN = Order number (supplier)<br>AE = Authorization for expense (AFE) number<br>AKO = Action authorization number<br>ANJ = Authorization number |
| 1154 | Reference identifier | C an..70 | **R** | | |
| 1156 | Document line identifier | C an..6 | **N** | | |
| 4000 | Reference version identifier | C an..35 | **N** | | |
| 1060 | Revision identifier | C an..6 | **O** | | |

Segment Notes:

This segment is used to refer to the Purchase Order or Purchase Order Change Request to which the Purchase Order Response is responding.
Additionally, further reference can be provided as corrections or clarifications to a previously sent Purchase Order or Purchase Order Change Request. References should normally be given at this point if they apply to all or a majority of the line items.

Example:
RFF+ON:652744'
RFF+PL:AUG1993'

## 5. Segments Layout

Segment number: 8

| | | | | |
|---|---|---|---|---|
| **SG1** | - C | 9999 | - | RFF-DTM |
| **DTM** | - C | 5 | - | Date/time/period |

Function:

A segment specifying the date/time related to the reference.

| | | EDIFACT | GS1 | * | Description |
|---|---|---|---|---|---|
| C507 | DATE/TIME/PERIOD | M | **M** | | |
| 2005 | Date or time or period function code qualifier | M an..3 | **M** | * | 10 = Shipment date/time, requested<br>171 = Reference date/time<br>194 = Start date/time<br>206 = End date/time |
| 2380 | Date or time or period value | C an..35 | **R** | | |
| 2379 | Date or time or period format code | C an..3 | **R** | | 102 = CCYYMMDD<br>203 = CCYYMMDDHHMM |

Segment Notes:

This segment is used to specify dates relating to the references given in the preceding RFF segment.

Example:
DTM+171:20020825:102'

## 5. Segments Layout

Segment number: 9

| | | | |
|---|---|---|---|
| **SG3** | - C | 99 - | NAD-LOC-FII-SG4-SG6 |
| **NAD** | - M | 1 - | Name and address |

Function:

A segment identifying names and addresses of the parties, in coded or clear form, and their functions relevant to the order response. Identification of the seller and buyer parties is mandatory for the order response message. It is recommended that where possible only the coded form of the party ID should be specified. e.g. The Buyer and Seller are known to each other, thus only the coded ID is required, but the Consignee or Delivery address may vary and would have to be clearly specified, preferably in structured format.

| | | EDIFACT | GS1 | * | Description |
|---|---|---|---|---|---|
| 3035 | Party function code qualifier | M an..3 | **M** | | BY = Buyer<br>CS = Consolidator<br>DP = Delivery party<br>IV = Invoicee<br>SN = Store number<br>SR = Supplier's agent/representative<br>SU = Supplier<br>UD = Ultimate customer<br>WH = Warehouse keeper |
| C082 | PARTY IDENTIFICATION DETAILS | C | **A** | | |
| 3039 | Party identifier | M an..35 | **M** | | GLN - Format n13 |
| 1131 | Code list identification code | C an..17 | **N** | | |
| 3055 | Code list responsible agency code | C an..3 | **R** | * | 9 = GS1 |
| C058 | NAME AND ADDRESS | C | **O** | | This composite may only be used to fulfill the requirements of directive 2003/58/EC, article 4. |
| 3124 | Name and address description | M an..35 | **M** | | |
| 3124 | Name and address description | C an..35 | **O** | | |
| 3124 | Name and address description | C an..35 | **O** | | |
| 3124 | Name and address description | C an..35 | **O** | | |
| 3124 | Name and address description | C an..35 | **O** | | |
| C080 | PARTY NAME | C | **D** | | |
| 3036 | Party name | M an..35 | **M** | | Party Name in clear text. |
| 3036 | Party name | C an..35 | **O** | | |
| 3036 | Party name | C an..35 | **O** | | |
| 3036 | Party name | C an..35 | **O** | | |
| 3036 | Party name | C an..35 | **O** | | |
| 3045 | Party name format code | C an..3 | **O** | | |
| C059 | STREET | C | **D** | | |
| 3042 | Street and number or post office box identifier | M an..35 | **M** | | Building Name/Number and Street |
| 3042 | Street and number or post office box identifier | C an..35 | **O** | | Name and/or P.O. Box. |
| 3042 | Street and number or post office box identifier | C an..35 | **O** | | |
| 3042 | Street and number or post office box identifier | C an..35 | **O** | | |

## 5. Segments Layout

Segment number: 9

| | | EDIFACT | GS1 | * | Description |
|---|---|---|---|---|---|
| 3164 | City name | C an..35 | **D** | | City/Town name, clear text |
| C819 | COUNTRY SUB-ENTITY DETAILS | C | **D** | | |
| 3229 | Country sub-entity name code | C an..9 | **O** | | |
| 1131 | Code list identification code | C an..17 | **O** | | |
| 3055 | Code list responsible agency code | C an..3 | **O** | | |
| 3228 | Country sub-entity name | C an..70 | **O** | | County/State, clear text. |
| 3251 | Postal identification code | C an..17 | **D** | | Postal Code |
| 3207 | Country name code | C an..3 | **D** | | ISO 3166 two alpha code |

Segment Notes:

This segment is used to identify the trading partners involved in the Purchase Order Response. Identification of the buyer and supplier of goods and services is mandatory using DE's 3035 and C082. Additional parties can be identified as a clarification or correction to a previously sent Purchase Order or Purchase Order Change Request. The delivery address given in NAD at header level is the main delivery address for all line items. It can however be overridden at line level by the use of Segment Group 35 LOC/QTY/DTM to indicate split deliveries.

Example:
NAD+BY+5412345000013::9'
NAD+SU+4012345500004::9'
NAD+DP+5412345000013::9'

Dependency Notes:
The following composites and data elements are only used when a coded name and address can not be used.
The affected composites and data elements are as follows:
C080 - C059 - 3164 - C819 - 3251 - 3207

## 5. Segments Layout

Segment number: 10

| | | | |
|---|---|---|---|
| **SG3** | - C | 99 - | NAD-LOC-FII-SG4-SG6 |
| **LOC** | - C | 25 - | Place/location identification |

Function:

A segment giving more specific location information of the party specified in the NAD segment e.g. internal site/ building number.

| | | EDIFACT | GS1 | * | Description |
|---|---|---|---|---|---|
| 3227 | Location function code qualifier | M an..3 | **M** | * | 7 = Place of delivery |
| C517 | LOCATION IDENTIFICATION | C | **A** | | |
| 3225 | Location name code | C an..25 | **A** | | GLN - Format n13 |
| 1131 | Code list identification code | C an..17 | **O** | | |
| 3055 | Code list responsible agency code | C an..3 | **D** | | 9 = GS1<br>112 = US, U.S. Census Bureau<br>DE 3055 must be used if DE 3225 is used and does not contain an UN/LOCODE. |
| 3224 | Location name | C an..256 | **O** | | |
| C519 | RELATED LOCATION ONE IDENTIFICATION | C | **N** | | |
| 3223 | First related location name code | C an..25 | | | |
| 1131 | Code list identification code | C an..17 | | | |
| 3055 | Code list responsible agency code | C an..3 | | | |
| 3222 | First related location name | C an..70 | | | |
| C553 | RELATED LOCATION TWO IDENTIFICATION | C | **N** | | |
| 3233 | Second related location name code | C an..25 | | | |
| 1131 | Code list identification code | C an..17 | | | |
| 3055 | Code list responsible agency code | C an..3 | | | |
| 3232 | Second related location name | C an..70 | | | |
| 5479 | Relation code | C an..3 | **N** | | |

Segment Notes:

This segment is used to indicate any location related to the party specified in the NAD segment.
It is recommended that Global Location Numbers GLN be used for the identification of all locations.

Example:
LOC+7+5412345678908::9'

## 5. Segments Layout

Segment number: 11

| | | | |
|---|---|---|---|
| **SG3** | - C | 99 - | NAD-LOC-FII-SG4-SG6 |
| **FII** | - C | 5 - | Financial institution information |

Function:

A segment identifying the financial institution (e.g. bank) and relevant account numbers for the seller, buyer and where necessary other parties. e.g. the buyer may provide a choice of financial institutions for direct debit purposes.

| | | EDIFACT | GS1 | * | Description |
|---|---|---|---|---|---|
| 3035 | Party function code qualifier | M an..3 | **M** | | BF = Beneficiary's bank |
| C078 | ACCOUNT HOLDER IDENTIFICATION | C | **R** | | |
| 3194 | Account holder identifier | C an..35 | **R** | | |
| 3192 | Account holder name | C an..35 | **O** | | |
| 3192 | Account holder name | C an..35 | **O** | | |
| 6345 | Currency identification code | C an..3 | **O** | | |
| C088 | INSTITUTION IDENTIFICATION | C | **O** | | |
| 3433 | Institution name code | C an..11 | **A** | | |
| 1131 | Code list identification code | C an..17 | **O** | | |
| 3055 | Code list responsible agency code | C an..3 | **D** | | |
| 3434 | Institution branch identifier | C an..17 | **O** | | |
| 1131 | Code list identification code | C an..17 | **O** | | |
| 3055 | Code list responsible agency code | C an..3 | **D** | | |
| 3432 | Institution name | C an..70 | **O** | | |
| 3436 | Institution branch location name | C an..70 | **O** | | |
| 3207 | Country name code | C an..3 | **O** | | |

Segment Notes:

The segment is used to identify financial institution information related to the party identified in the NAD segment.

Example:
FII+BF+22098645+KREDBEBB:25:5'

## 5. Segments Layout

Segment number: 12

| | | | |
|---|---|---|---|
| **SG3** | - C | 99 - | NAD-LOC-FII-SG4-SG6 |
| **SG4** | - C | 99 - | RFF |
| **RFF** | - M | 1 - | Reference |

Function:

A segment identifying the reference by its number and where appropriate a line number within a document.

| | | EDIFACT | GS1 | * | Description |
|---|---|---|---|---|---|
| C506 | REFERENCE | M | **M** | | |
| 1153 | Reference code qualifier | M an..3 | **M** | | YC1 = Additional party identification (GS1 Temporary Code)<br>FC = Fiscal number<br>GN = Government reference number<br>IA = Internal vendor number<br>IT = Internal customer number<br>TL = Tax exemption licence number<br>VA = VAT registration number |
| 1154 | Reference identifier | C an..70 | **R** | | |
| 1156 | Document line identifier | C an..6 | **N** | | |
| 4000 | Reference version identifier | C an..35 | **N** | | |
| 1060 | Revision identifier | C an..6 | **N** | | |

Segment Notes:

This segment is used to specify references related to the party specified in the previous NAD segment.

Example:
RFF+VA:87765432'

## 5. Segments Layout

Segment number: 13

| | | | |
|---|---|---|---|
| **SG3** | - C | 99 - | NAD-LOC-FII-SG4-SG6 |
| **SG6** | - C | 5 - | CTA-COM |
| **CTA** | - M | 1 - | Contact information |

Function:

A segment to identify a person or department, and their function, to whom communications should be directed.

| | | EDIFACT | GS1 | * | Description |
|---|---|---|---|---|---|
| 3139 | Contact function code | C an..3 | **R** | | IC = Information contact<br>OC = Order contact<br>PD = Purchasing contact<br>SR = Sales representative or department |
| C056 | DEPARTMENT OR EMPLOYEE DETAILS | C | **O** | | |
| 3413 | Department or employee name code | C an..17 | **O** | | |
| 3412 | Department or employee name | C an..35 | **O** | | |

Segment Notes:

This segment is used to identify contact details for the party specified in the NAD segment.
The Global Location Number GLN - Format n13 - is particularly suitable for this purpose.

Example:
CTA+OC+:P FORGET'

## 5. Segments Layout

Segment number: 14

| | | | | |
|---|---|---|---|---|
| **SG3** | - C | 99 | - | NAD-LOC-FII-SG4-SG6 |
| **SG6** | - C | 5 | - | CTA-COM |
| **COM** | - C | 5 | - | Communication contact |

Function:

A segment to identify a communications type and number for the contact specified in the CTA segment.

| | | EDIFACT | GS1 | * | Description |
|---|---|---|---|---|---|
| C076 | COMMUNICATION CONTACT | M | **M** | | |
| 3148 | Communication address identifier | M an..512 | **M** | | |
| 3155 | Communication address code qualifier | M an..3 | **M** | | EM = Electronic mail<br>TE = Telephone<br>WWW = WWW-Site (GS1 Temporary Code) |

Segment Notes:

This segment identifies the communications number, and type of communications, for the person or department identified in the preceding CTA segment.

Example:
COM+0044715632478:TE'

## 5. Segments Layout

Segment number: 15

| | | | |
|---|---|---|---|
| **SG7** | - C | 5 - | TAX-MOA |
| **TAX** | - M | 1 - | Duty/tax/fee details |

Function:

A segment specifying a tax type, category and rate, or exemption, relating to the whole order response. e.g. Value Added Tax at the standard rate is applicable for all items.

| | | EDIFACT | GS1 | * | Description |
|---|---|---|---|---|---|
| 5283 | Duty or tax or fee function code qualifier | M an..3 | **M** | | 5 = Customs duty<br>7 = Tax |
| C241 | DUTY/TAX/FEE TYPE | C | **D** | | |
| 5153 | Duty or tax or fee type name code | C an..3 | **O** | | GST = Goods and services tax<br>VAT = Value added tax |
| 1131 | Code list identification code | C an..17 | **O** | | |
| 3055 | Code list responsible agency code | C an..3 | **D** | | |
| 5152 | Duty or tax or fee type name | C an..35 | **O** | | |
| C533 | DUTY/TAX/FEE ACCOUNT DETAIL | C | **O** | | |
| 5289 | Duty or tax or fee account code | M an..6 | **M** | | |
| 1131 | Code list identification code | C an..17 | **O** | | |
| 3055 | Code list responsible agency code | C an..3 | **D** | | |
| 5286 | Duty or tax or fee assessment basis value | C an..15 | **O** | | |
| C243 | DUTY/TAX/FEE DETAIL | C | **A** | | |
| 5279 | Duty or tax or fee rate code | C an..7 | **O** | | |
| 1131 | Code list identification code | C an..17 | **O** | | |
| 3055 | Code list responsible agency code | C an..3 | **D** | | |
| 5278 | Duty or tax or fee rate | C an..17 | **R** | | |
| 5273 | Duty or tax or fee rate basis code | C an..12 | **O** | | |
| 1131 | Code list identification code | C an..17 | **O** | | |
| 3055 | Code list responsible agency code | C an..3 | **D** | | |
| 5305 | Duty or tax or fee category code | C an..3 | **A** | | A = Mixed tax rate<br>E = Exempt from tax<br>S = Standard rate |
| 3446 | Party tax identifier | C an..20 | **O** | | |
| 1227 | Calculation sequence code | C an..3 | **N** | | |

Segment Notes:

This segment is used in the Purchase Order Response to provide a correction or clarification to previously sent tax information.

Example:
TAX+7+VAT+++:::21+S'

## 5. Segments Layout

Segment number: 15

| |
|---|
| Dependency Notes:<br>DE C241 and 5305: Tax types and categories will vary from country to country. They should be defined by national guidelines. |

## 5. Segments Layout

Segment number: 16

| | | | |
|---|---|---|---|
| **SG7** | - C | 5 - | TAX-MOA |
| **MOA** | - C | 1 - | Monetary amount |

Function:

A segment specifying the amount for the identified tax/fee.

| | | EDIFACT | GS1 | * | Description |
|---|---|---|---|---|---|
| C516 | MONETARY AMOUNT | M | **M** | | |
| 5025 | Monetary amount type code qualifier | M an..3 | **M** | | 124 = Tax amount<br>125 = Taxable amount |
| 5004 | Monetary amount | C n..35 | **R** | | |
| 6345 | Currency identification code | C an..3 | **N** | | |
| 6343 | Currency type code qualifier | C an..3 | **N** | | |
| 4405 | Status description code | C an..3 | **N** | | |

Segment Notes:

This segment is used to indicate tax amounts for the previous TAX segment.

Example:
MOA+124:154.54'

## 5. Segments Layout

Segment number: 17

| | | | |
|---|---|---|---|
| **SG8** | - C | 5 - | CUX-DTM |
| **CUX** | - M | 1 - | Currencies |

Function:

A segment identifying the currencies in the order response, e.g. the order currency. A rate of exchange may be given to convert a reference currency into a target currency.

| | | EDIFACT | GS1 | * | Description |
|---|---|---|---|---|---|
| C504 | CURRENCY DETAILS | C | **R** | | |
| 6347 | Currency usage code qualifier | M an..3 | **M** | * | 2 = Reference currency |
| 6345 | Currency identification code | C an..3 | **R** | | ISO 4217 three alpha |
| 6343 | Currency type code qualifier | C an..3 | **R** | * | 4 = Invoicing currency<br>9 = Order currency<br>10 = Pricing currency<br>11 = Payment currency<br>12 = Quotation currency |
| 6348 | Currency rate value | C n..4 | **N** | | |
| C504 | CURRENCY DETAILS | C | **D** | | The second occurrence of this composite is only used if a target currency is being specified. |
| 6347 | Currency usage code qualifier | M an..3 | **M** | * | 3 = Target currency |
| 6345 | Currency identification code | C an..3 | **R** | | ISO 4217 three alpha |
| 6343 | Currency type code qualifier | C an..3 | **R** | * | 4 = Invoicing currency<br>9 = Order currency<br>10 = Pricing currency<br>11 = Payment currency<br>12 = Quotation currency |
| 6348 | Currency rate value | C n..4 | **O** | | |
| 5402 | Currency exchange rate | C n..12 | **D** | | The rate of exchange is only used if a target currency has been identified in the second occurrence of C504. |
| 6341 | Exchange rate currency market identifier | C an..3 | **N** | | |

Segment Notes:

This segment is used to specify currency information for the complete purchase order response.
The CUX segment is mandatory for international exchanges.
This segment is not usually sent in the Purchase Order Response unless it provides a corrections or clarification to the currency information provided in a previous Purchase Order or Purchase Order Change Request.
When specifying Reference and Target Currencies for international trade, one occurrence of CUX is all that is required. The reference currency is identified in the first occurrence of composite C504, with the target currency specified in the second occurrence of C504. The rate of exchange between the two is detailed in DE 5402.

Example:
CUX+2:EUR:9'
CUX+2:EUR:9+3:USD:4+0.90243'

## 5. Segments Layout

Segment number: 18

| | | | |
|---|---|---|---|
| **SG8** | - C | 5 - | CUX-DTM |
| **DTM** | - C | 5 - | Date/time/period |

Function:

A segment specifying the date/time/period related to the rate of exchange.

| | | EDIFACT | GS1 | * | Description |
|---|---|---|---|---|---|
| C507 | DATE/TIME/PERIOD | M | **M** | | |
| 2005 | Date or time or period function code qualifier | M an..3 | **M** | * | 134 = Rate of exchange date/time<br>194 = Start date/time<br>206 = End date/time |
| 2380 | Date or time or period value | C an..35 | **R** | | |
| 2379 | Date or time or period format code | C an..3 | **R** | | 102 = CCYYMMDD<br>203 = CCYYMMDDHHMM<br>718 = CCYYMMDD-CCYYMMDD |

Segment Notes:

This segment is used to specify dates related to the previous CUX segment.

Example:
DTM+134:20020901:102'

## 5. Segments Layout

Segment number: 19

| | | | |
|---|---|---|---|
| **SG9** | - C | 10 - | PAT-DTM-PCD-MOA |
| **PAT** | - M | 1 - | Payment terms basis |

Function:

A segment identifying the payment terms and date/time basis.

| | | EDIFACT | GS1 | * | Description |
|---|---|---|---|---|---|
| 4279 | Payment terms type code qualifier | M an..3 | **M** | | 1 = Basic<br>2 = End of month<br>3 = Fixed date<br>4 = Deferred<br>5 = Discount not applicable<br>6 = Mixed<br>7 = Extended<br>8 = Basic discount offered<br>9 = Proximo<br>10 = Instant<br>11 = Elective<br>12 = 10 days after end of month<br>18 = Previously agreed upon<br>20 = Penalty terms<br>22 = Discount |
| C110 | PAYMENT TERMS | C | **O** | | |
| 4277 | Payment terms description identifier | M an..17 | **M** | | 1 = Draft(s) drawn on issuing bank<br>2 = Draft(s) drawn on advising bank<br>3 = Draft(s) drawn on reimbursing bank<br>4 = Draft(s) drawn on applicant<br>5 = Draft(s) drawn on any other drawee<br>6 = No drafts |
| 1131 | Code list identification code | C an..17 | **O** | | |
| 3055 | Code list responsible agency code | C an..3 | **D** | | 91 = Assigned by supplier or supplier's agent<br>92 = Assigned by buyer or buyer's agent<br>ZZZ = Mutually defined |
| 4276 | Payment terms description | C an..35 | **O** | | |
| 4276 | Payment terms description | C an..35 | **O** | | |
| C112 | TERMS/TIME INFORMATION | C | **O** | | |
| 2475 | Time reference code | M an..3 | **M** | | 5 = Date of invoice<br>66 = Specified date<br>81 = Date of shipment as evidenced by the transport document(s) |
| 2009 | Terms time relation code | C an..3 | **O** | | 3 = After reference |
| 2151 | Period type code | C an..3 | **O** | | D = Day<br>M = Month<br>Y = Year |
| 2152 | Period count quantity | C n..3 | **O** | | Number of periods for payment. |

Segment Notes:

This segment is used by the issuer of the order response to indicate terms of payment which are particular to the currently referenced order only.

Example:
PAT+22++5:3:D:20'
This example indicates discount payment terms with payment due 20 days after the reference date, which in this case is the invoice date.

## 5. Segments Layout

Segment number: 20

| | | | |
|---|---|---|---|
| **SG9** | - C | 10 - | PAT-DTM-PCD-MOA |
| **DTM** | - C | 5 - | Date/time/period |

Function:

A segment giving the specific date/time/period, if needed, of any payments, discounts, instalments etc.

| | | EDIFACT | GS1 | * | Description |
|---|---|---|---|---|---|
| C507 | DATE/TIME/PERIOD | M | **M** | | |
| 2005 | Date or time or period function code qualifier | M an..3 | **M** | * | 7 = Effective date/time<br>12 = Terms discount due date/time<br>13 = Terms net due date<br>209 = Value date<br>531 = Payment period |
| 2380 | Date or time or period value | C an..35 | **R** | | |
| 2379 | Date or time or period format code | C an..3 | **R** | | 102 = CCYYMMDD<br>718 = CCYYMMDD-CCYYMMDD |

Segment Notes:

This segment is used to specify any dates associated with the payment terms.

Example:
DTM+13:20020331:102'
Net due date for payment is the 31st of March 2002.

## 5. Segments Layout

Segment number: 21

| | | | |
|---|---|---|---|
| **SG9** | - C | 10 - | PAT-DTM-PCD-MOA |
| **PCD** | - C | 1 - | Percentage details |

Function:

A segment specifying the discount, interest, penalty as well as instalment percentage.

| | | EDIFACT | GS1 | * | Description |
|---|---|---|---|---|---|
| C501 | PERCENTAGE DETAILS | M | **M** | | |
| 5245 | Percentage type code qualifier | M an..3 | **M** | | 12 = Discount<br>15 = Penalty percentage<br>16 = Interest percentage |
| 5482 | Percentage | C n..10 | **R** | | |
| 5249 | Percentage basis identification code | C an..3 | **O** | | 1 = Per unit<br>13 = Invoice value |
| 1131 | Code list identification code | C an..17 | **O** | | |
| 3055 | Code list responsible agency code | C an..3 | **D** | | |
| 4405 | Status description code | C an..3 | **N** | | |

Segment Notes:

This segment is used to specify percentages related to the payment terms.

Example:
PCD+15:2.5:13'

## 5. Segments Layout

Segment number: 22

| | | | |
|---|---|---|---|
| **SG9** | - C | 10 - | PAT-DTM-PCD-MOA |
| **MOA** | - C | 1 - | Monetary amount |

Function:

A segment specifying amounts related to payment discounts, penalties or instalments.

| | | EDIFACT | GS1 | * | Description |
|---|---|---|---|---|---|
| C516 | MONETARY AMOUNT | M | **M** | | |
| 5025 | Monetary amount type code qualifier | M an..3 | **M** | | 21 = Cash discount<br>23 = Charge amount |
| 5004 | Monetary amount | C n..35 | **R** | | Actual value being charged/discounted. |
| 6345 | Currency identification code | C an..3 | **N** | | |
| 6343 | Currency type code qualifier | C an..3 | **N** | | |
| 4405 | Status description code | C an..3 | **N** | | |

Segment Notes:

This segment is used to specify monetary values related to the payment terms.

Example:
MOA+21:100'

## 5. Segments Layout

Segment number: 23

| | | | |
|---|---|---|---|
| **SG10** | - C | 10 - | TDT-SG11 |
| **TDT** | - M | 1 - | Details of transport |

Function:

A segment specifying the mode, means and identification of the transport for the goods. If required, the carrier's address should be indicated within the NAD Segment group.

| | | EDIFACT | GS1 | * | Description |
|---|---|---|---|---|---|
| 8051 | Transport stage code qualifier | M an..3 | **M** | | 20 = Main-carriage transport |
| 8028 | Means of transport journey identifier | C an..17 | **O** | | Reference Number covering the transport. |
| C220 | MODE OF TRANSPORT | C | **A** | | |
| 8067 | Transport mode name code | C an..3 | **R** | | 10 = Maritime transport<br>20 = Rail transport<br>30 = Road transport<br>40 = Air transport |
| 8066 | Transport mode name | C an..17 | **N** | | |
| C228 | TRANSPORT MEANS | C | **O** | | Die Datenelemente 8179 und 8178 werden nur dann benutzt, wenn der Transporttyp explizit identifiziert werden muss, d. h. wenn eine allgemeine Beschreibung, wie Straßentransport, nicht zutrifft. |
| 8179 | Transport means description code | C an..8 | **D** | | 12 = Ship tanker<br>23 = Rail bulk car<br>25 = Rail express<br>31 = Truck<br>32 = Road tanker |
| 8178 | Transport means description | C an..17 | **D** | | |
| C040 | CARRIER | C | **O** | | |
| 3127 | Carrier identifier | C an..17 | **A** | | GLN - Format n13 |
| 1131 | Code list identification code | C an..17 | **O** | | |
| 3055 | Code list responsible agency code | C an..3 | **D** | | 9 = GS1 |
| 3128 | Carrier name | C an..35 | **O** | | |
| 8101 | Transit direction indicator code | C an..3 | **O** | | BS = Buyer to supplier<br>SB = Supplier to buyer |
| C401 | EXCESS TRANSPORTATION INFORMATION | C | **N** | | |
| 8457 | Excess transportation reason code | M an..3 | | | |
| 8459 | Excess transportation responsibility code | M an..3 | | | |
| 7130 | Customer shipment authorisation identifier | C an..17 | | | |
| C222 | TRANSPORT IDENTIFICATION | C | **O** | | |
| 8213 | Transport means identification name identifier | C an..9 | **O** | | |
| 1131 | Code list identification code | C an..17 | **O** | | |
| 3055 | Code list responsible agency code | C an..3 | **D** | | DE 3055 must be used if DE 8213 is used. |

## 5. Segments Layout

Segment number: 23

| | | EDIFACT | GS1 | * | Description |
|---|---|---|---|---|---|
| 8212 | Transport means identification name | C an..35 | **R** | | Vehicle license plate/Aircraft number. |
| 8453 | Transport means nationality code | C an..3 | **O** | | ISO 3166 two alpha code |
| 8281 | Transport means ownership indicator code | C an..3 | **N** | | |

Segment Notes:

This segment is used in the Purchase Order Response to provide a change or correction to the transportation information provided in a previous Purchase Order or Purchase Order Change Request.
The TDT segment can be used to specify transport instructions for the whole Purchase Order Response, such as requesting an express transport service.

Example:
TDT+20++30+31'

Dependency Notes:
Data Elements 8179 and 8178 are only used when the type of transport must be specifically identified, that is, a generic description such as road transport is unsuitable.

## 5. Segments Layout

Segment number: 24

| | | | |
|---|---|---|---|
| **SG10** | - C | 10 - | TDT-SG11 |
| **SG11** | - C | 10 - | LOC-DTM |
| **LOC** | - M | 1 - | Place/location identification |

Function:

A segment identifying locations relevant to the transport specified in the TDT segment. e.g. place of departure or border crossing point.

| | | EDIFACT | GS1 | * | Description |
|---|---|---|---|---|---|
| 3227 | Location function code qualifier | M an..3 | **M** | | 24 = Port of entry |
| C517 | LOCATION IDENTIFICATION | C | **A** | | |
| 3225 | Location name code | C an..25 | **A** | | GLN - Format n13 |
| 1131 | Code list identification code | C an..17 | **O** | | |
| 3055 | Code list responsible agency code | C an..3 | **D** | | 9 = GS1<br>112 = US, U.S. Census Bureau<br>DE 3055 must be used if DE 3225 is used and does not contain an UN/LOCODE. |
| 3224 | Location name | C an..256 | **O** | | |
| C519 | RELATED LOCATION ONE IDENTIFICATION | C | **N** | | |
| 3223 | First related location name code | C an..25 | | | |
| 1131 | Code list identification code | C an..17 | | | |
| 3055 | Code list responsible agency code | C an..3 | | | |
| 3222 | First related location name | C an..70 | | | |
| C553 | RELATED LOCATION TWO IDENTIFICATION | C | **N** | | |
| 3233 | Second related location name code | C an..25 | | | |
| 1131 | Code list identification code | C an..17 | | | |
| 3055 | Code list responsible agency code | C an..3 | | | |
| 3232 | Second related location name | C an..70 | | | |
| 5479 | Relation code | C an..3 | **N** | | |

Segment Notes:

This segment is used to specify any locations related to the TDT segment.
For the identification of locations it is recommended to use Global Location Numbers GLN.

Example:
LOC+24+5412345678908::9'

## 5. Segments Layout

Segment number: 25

| | | | | |
|---|---|---|---|---|
| **SG10** | - C | 10 | - | TDT-SG11 |
| **SG11** | - C | 10 | - | LOC-DTM |
| **DTM** | - C | 5 | - | Date/time/period |

Function:

A segment identifying the date/time details of departure and/or arrival of the transported goods for the specified location.

| | | EDIFACT | GS1 | * | Description |
|---|---|---|---|---|---|
| C507 | DATE/TIME/PERIOD | M | **M** | | |
| 2005 | Date or time or period function code qualifier | M an..3 | **M** | * | 189 = Departure date/time, scheduled<br>232 = Arrival date/time, scheduled |
| 2380 | Date or time or period value | C an..35 | **R** | | |
| 2379 | Date or time or period format code | C an..3 | **R** | | 102 = CCYYMMDD<br>203 = CCYYMMDDHHMM<br>718 = CCYYMMDD-CCYYMMDD |

Segment Notes:

This segment is used to provide dates related to the transport details specified in the TDT segment.

Example:
DTM+232:20020331:102'

## 5. Segments Layout

Segment number: 26

| | | | |
|---|---|---|---|
| **SG12** | - C | 5 - | TOD-LOC |
| **TOD** | - M | 1 - | Terms of delivery or transport |

Function:

A segment identifying the delivery terms to be used. e.g. UN INCOTERMS code could be used to specify the delivery terms.

| | | EDIFACT | GS1 | * | Description |
|---|---|---|---|---|---|
| 4055 | Delivery or transport terms function code | C an..3 | **R** | | 3 = Price and despatch condition<br>6 = Delivery condition |
| 4215 | Transport charges payment method code | C an..3 | **O** | | MX = Mixed<br>PO = Prepaid only |
| C100 | TERMS OF DELIVERY OR TRANSPORT | C | **A** | | |
| 4053 | Delivery or transport terms description code | C an..3 | **O** | | INCOTERMS (See EANCOM Codes Set)<br>If INCOTERMS are applicable, then DE 3055 has to contain code value "9" and DE 1131 must be used. |
| 1131 | Code list identification code | C an..17 | **D** | | |
| 3055 | Code list responsible agency code | C an..3 | **D** | | Data elements 1131 and 3055 are only used if specific terms of delivery codes, which are outside those recommended by EDIFACT, are being used. |
| 4052 | Delivery or transport terms description | C an..70 | **O** | | |
| 4052 | Delivery or transport terms description | C an..70 | **O** | | |

Segment Notes:

This segment is used in the Purchase Order Response to provide a change or correction to the terms of delivery information provided in a previous Purchase Order or Purchase Order Change Request.

Example:
TOD+3++CIF:2E:9'

## 5. Segments Layout

Segment number: 27

| | | | |
|---|---|---|---|
| **SG12** | - C | 5 - | TOD-LOC |
| **LOC** | - C | 2 - | Place/location identification |

Function:

A segment identifying locations relevant to the delivery terms specified in the TOD segment.

| | | EDIFACT | GS1 | * | Description |
|---|---|---|---|---|---|
| 3227 | Location function code qualifier | M an..3 | **M** | | 1 = Place of terms of delivery |
| C517 | LOCATION IDENTIFICATION | C | **A** | | |
| 3225 | Location name code | C an..25 | **A** | | UN/LOCODES |
| 1131 | Code list identification code | C an..17 | **O** | | |
| 3055 | Code list responsible agency code | C an..3 | **D** | | 3 = IATA (International Air Transport Association)<br>DE 3055 must be used if DE 3225 is used and does not contain an UN/LOCODE. |
| 3224 | Location name | C an..256 | **O** | | |
| C519 | RELATED LOCATION ONE IDENTIFICATION | C | **N** | | |
| 3223 | First related location name code | C an..25 | | | |
| 1131 | Code list identification code | C an..17 | | | |
| 3055 | Code list responsible agency code | C an..3 | | | |
| 3222 | First related location name | C an..70 | | | |
| C553 | RELATED LOCATION TWO IDENTIFICATION | C | **N** | | |
| 3233 | Second related location name code | C an..25 | | | |
| 1131 | Code list identification code | C an..17 | | | |
| 3055 | Code list responsible agency code | C an..3 | | | |
| 3232 | Second related location name | C an..70 | | | |
| 5479 | Relation code | C an..3 | **N** | | |

Segment Notes:

This segment is used to identify a location related to the terms of delivery.

Example:
LOC+1+BE-BRU'

## 5. Segments Layout

Segment number: 28

| | | | |
|---|---|---|---|
| **SG13** | - C | 99 - | PAC-MEA-SG14 |
| **PAC** | - M | 1 - | Package |

Function:

A segment specifying the number and type of packages for the whole order response, e.g. number and type of pallets.

| | | EDIFACT | GS1 | * | Description |
|---|---|---|---|---|---|
| 7224 | Package quantity | C n..8 | **O** | | |
| C531 | PACKAGING DETAILS | C | **A** | | |
| 7075 | Packaging level code | C an..3 | **N** | | |
| 7233 | Packaging related description code | C an..3 | **O** | | 50 = Package barcoded EAN-13 or EAN-8<br>51 = Package barcoded ITF-14<br>52 = Package barcoded UCC or EAN-128 |
| 7073 | Packaging terms and conditions code | C an..3 | **O** | | 1 = Packaging cost paid by supplier<br>2 = Packaging cost paid by recipient<br>3 = Packaging cost not charged (returnable) |
| C202 | PACKAGE TYPE | C | **O** | | |
| 7065 | Package type description code | C an..17 | **R** | | CS = Case |
| 1131 | Code list identification code | C an..17 | **O** | | |
| 3055 | Code list responsible agency code | C an..3 | **D** | | 9 = GS1<br>Code 9 in this data element is used only when GS1 codes are used in DE 7065. |
| 7064 | Type of packages | C an..35 | **O** | | |
| C402 | PACKAGE TYPE IDENTIFICATION | C | **N** | | |
| 7077 | Description format code | M an..3 | | | |
| 7064 | Type of packages | M an..35 | | | |
| 7143 | Item type identification code | C an..3 | | | |
| 7064 | Type of packages | C an..35 | | | |
| 7143 | Item type identification code | C an..3 | | | |
| C532 | RETURNABLE PACKAGE DETAILS | C | **D** | | Composite C532 is only used where the packaging being described is returnable. This composite identifies who is responsible for payment of its return. |
| 8395 | Returnable package freight payment responsibility code | C an..3 | **O** | | 1 = Paid by customer<br>2 = Free<br>3 = Paid by supplier |
| 8393 | Returnable package load contents code | C an..3 | **N** | | |

Segment Notes:

This segment is used to specify the number and type of packages for the whole message.

Example:
PAC+10++CS'
PAC+22++09'

## 5. Segments Layout

Segment number: 29

| | | | |
|---|---|---|---|
| **SG13** | - C | 99 - | PAC-MEA-SG14 |
| **MEA** | - C | 5 - | Measurements |

Function:

A segment specifying physical measurements of packages described in the PAC segment. e.g. package length, weight.

| | | EDIFACT | GS1 | * | Description |
|---|---|---|---|---|---|
| 6311 | Measurement purpose code qualifier | M an..3 | **M** | | CT = Counts |
| C502 | MEASUREMENT DETAILS | C | **C** | | |
| 6313 | Measured attribute code | C an..3 | **C** | | NPP = Number of pallet places (GS1 Code) |
| 6321 | Measurement significance code | C an..3 | **N** | | |
| 6155 | Non-discrete measurement name code | C an..17 | **N** | | |
| 6154 | Non-discrete measurement name | C an..70 | **N** | | |
| C174 | VALUE/RANGE | C | **C** | | |
| 6411 | Measurement unit code | M an..3 | **M** | | NAR = number of articles |
| 6314 | Measurement value | C an..18 | **O** | | |
| 6162 | Range minimum value | C n..18 | **N** | | |
| 6152 | Range maximum value | C n..18 | **N** | | |
| 6432 | Significant digits quantity | C n..2 | **N** | | |
| 7383 | Surface or layer code | C an..3 | **N** | | |

Segment Notes:

This segment is used to provide measurements of the units described in the PAC segment.

Example:
MEA+CT+NPP+NAR:12'
Equipment includes a total of 22 pallets, occupying 12 pallet places.

## 5. Segments Layout

Segment number: 30

| | | | | |
|---|---|---|---|---|
| **SG13** | - C | 99 | - | PAC-MEA-SG14 |
| **SG14** | - C | 99 | - | PCI-RFF-DTM-GIN |
| **PCI** | - M | 1 | - | Package identification |

Function:

A segment specifying markings and labels used on individual physical units (packages) described in the PAC segment.

| | | EDIFACT | GS1 | * | Description |
|---|---|---|---|---|---|
| 4233 | Marking instructions code | C an..3 | **R** | | 16 = Buyer's instructions<br>33E = Marked with serial shipping container code (GS1 Code) |
| C210 | MARKS & LABELS | C | **O** | | |
| 7102 | Shipping marks description | M an..35 | **M** | | |
| 7102 | Shipping marks description | C an..35 | **O** | | |
| 7102 | Shipping marks description | C an..35 | **O** | | |
| 7102 | Shipping marks description | C an..35 | **O** | | |
| 7102 | Shipping marks description | C an..35 | **O** | | |
| 7102 | Shipping marks description | C an..35 | **O** | | |
| 7102 | Shipping marks description | C an..35 | **O** | | |
| 7102 | Shipping marks description | C an..35 | **O** | | |
| 7102 | Shipping marks description | C an..35 | **O** | | |
| 7102 | Shipping marks description | C an..35 | **O** | | |
| 8275 | Container or package contents indicator code | C an..3 | **N** | | |
| C827 | TYPE OF MARKING | C | **N** | | |
| 7511 | Marking type code | M an..3 | | | |
| 1131 | Code list identification code | C an..17 | | | |
| 3055 | Code list responsible agency code | C an..3 | | | |

Segment Notes:

This segment is used to identify markings on the packaging of the product being invoiced.

Example:
PCI+33E'

## 5. Segments Layout

Segment number: 31

| | | | | |
|---|---|---|---|---|
| **SG13** | - C | 99 | - | PAC-MEA-SG14 |
| **SG14** | - C | 99 | - | PCI-RFF-DTM-GIN |
| **RFF** | - C | 1 | - | Reference |

Function:

A segment identifying the master label number.

| | | EDIFACT | GS1 | * | Description |
|---|---|---|---|---|---|
| C506 | REFERENCE | M | **M** | | |
| 1153 | Reference code qualifier | M an..3 | **M** | | AAT = Master label number<br>PK = Packing list number |
| 1154 | Reference identifier | C an..70 | **R** | | |
| 1156 | Document line identifier | C an..6 | **N** | | |
| 4000 | Reference version identifier | C an..35 | **N** | | |
| 1060 | Revision identifier | C an..6 | **N** | | |

Segment Notes:

This segment is used to specify any references, which relate to the package identification, e.g. master label number.

Example:
RFF+AAT:9677'

## 5. Segments Layout

Segment number: 32

| | | | | |
|---|---|---|---|---|
| **SG13** | - C | 99 | - | PAC-MEA-SG14 |
| **SG14** | - C | 99 | - | PCI-RFF-DTM-GIN |
| **DTM** | - C | 5 | - | Date/time/period |

Function:

A segment specifying the dates relevant to the package markings.

| | | EDIFACT | GS1 | * | Description |
|---|---|---|---|---|---|
| C507 | DATE/TIME/PERIOD | M | **M** | | |
| 2005 | Date or time or period function code qualifier | M an..3 | **M** | * | 171 = Reference date/time |
| 2380 | Date or time or period value | C an..35 | **R** | | |
| 2379 | Date or time or period format code | C an..3 | **R** | | 102 = CCYYMMDD |

Segment Notes:

This segment is used to specify dates relating to the references given in the preceding RFF segment.

Example:
DTM+171:20011101:102'

## 5. Segments Layout

Segment number: 33

| | | | |
|---|---|---|---|
| **SG13** | - C | 99 - | PAC-MEA-SG14 |
| **SG14** | - C | 99 - | PCI-RFF-DTM-GIN |
| **GIN** | - C | 99 - | Goods identity number |

Function:

A segment identifying the number or ranges of numbers for use with the package markings.

| | | EDIFACT | GS1 | * | Description |
|---|---|---|---|---|---|
| 7405 | Object identification code qualifier | M an..3 | **M** | | BJ = Serial shipping container code<br>BX = Batch number<br>SRV = GS1 Global Trade Item Number (GS1 Temporary Code) |
| C208 | IDENTITY NUMBER RANGE | M | **M** | | |
| 7402 | Object identifier | M an..35 | **M** | | |
| 7402 | Object identifier | C an..35 | **O** | | |
| C208 | IDENTITY NUMBER RANGE | C | **O** | | |
| 7402 | Object identifier | M an..35 | **M** | | |
| 7402 | Object identifier | C an..35 | **O** | | |
| C208 | IDENTITY NUMBER RANGE | C | **O** | | |
| 7402 | Object identifier | M an..35 | **M** | | |
| 7402 | Object identifier | C an..35 | **O** | | |
| C208 | IDENTITY NUMBER RANGE | C | **O** | | |
| 7402 | Object identifier | M an..35 | **M** | | |
| 7402 | Object identifier | C an..35 | **O** | | |
| C208 | IDENTITY NUMBER RANGE | C | **O** | | |
| 7402 | Object identifier | M an..35 | **M** | | |
| 7402 | Object identifier | C an..35 | **O** | | |

Segment Notes:

This segment is used to provide identification numbers relevant to the packaging unit and level identified in the PAC segment.
In EANCOM it is recommended to use the Serial Shipping Container Code (SSCC) for unique identification of individual transport packages.

Example:
GIN+BJ+354123450000000014:354123450000000106'

## 5. Segments Layout

Segment number: 34

| | | | |
|---|---|---|---|
| **SG15** | - C | 10 - | EQD |
| **EQD** | - M | 1 - | Equipment details |

Function:

A segment to define information regarding equipment to be used in conjunction with the whole order, and if required, to indicate responsibility for supply of the equipment.

| | | EDIFACT | GS1 | * | Description |
|---|---|---|---|---|---|
| 8053 | Equipment type code qualifier | M an..3 | **M** | | CN = Container |
| C237 | EQUIPMENT IDENTIFICATION | C | **N** | | |
| 8260 | Equipment identifier | C an..17 | | | |
| 1131 | Code list identification code | C an..17 | | | |
| 3055 | Code list responsible agency code | C an..3 | | | |
| 3207 | Country name code | C an..3 | | | |
| C224 | EQUIPMENT SIZE AND TYPE | C | **O** | | |
| 8155 | Equipment size and type description code | C an..10 | **O** | | |
| 1131 | Code list identification code | C an..17 | **O** | | |
| 3055 | Code list responsible agency code | C an..3 | **D** | | |
| 8154 | Equipment size and type description | C an..35 | **O** | | |
| 8077 | Equipment supplier code | C an..3 | **N** | | |
| 8249 | Equipment status code | C an..3 | **N** | | |
| 8169 | Full or empty indicator code | C an..3 | **N** | | |

Segment Notes:

This segment is used to provide information on equipment which will be used in the despatch of the products ordered.

Example:
EQD+CN'

## 5. Segments Layout

Segment number: 35

| | | | |
|---|---|---|---|
| **SG19** | - C | 99 - | ALC-ALI-DTM-SG20-SG21-SG22-SG23-SG24 |
| **ALC** | - M | 1 - | Allowance or charge |

Function:

A segment identifying the charge or allowance and, where necessary its calculation sequence.

| | | EDIFACT | GS1 | * | Description |
|---|---|---|---|---|---|
| 5463 | Allowance or charge code qualifier | M an..3 | **M** | | A = Allowance<br>C = Charge<br>N = No allowance or charge |
| C552 | ALLOWANCE/CHARGE INFORMATION | C | **O** | | |
| 1230 | Allowance or charge identifier | C an..35 | **D** | | If code '69' is used in DE 5189, the agreement number must be specified in DE 1230. |
| 5189 | Allowance or charge identification code | C an..3 | **O** | | 1 = Handling commission<br>32 = Courier fee<br>69 = Charge for a customer specific finish |
| 4471 | Settlement means code | C an..3 | **O** | | 3 = Vendor check/cheque to customer<br>5 = Charge to be paid by vendor<br>6 = Charge to be paid by customer |
| 1227 | Calculation sequence code | C an..3 | **D** | | 1 = First step of calculation<br>2 = Second step of calculation<br>etc, etc, etc.....<br>9 = Ninth step of calculation<br>The calculation sequence indicator is used when multiple allowances and/or charges are applicable. If various allowances and/or charges percentages, quantities, monetary amounts or rates are applicable to the same base price, then the calculation sequence indicator will always equal one. |
| C214 | SPECIAL SERVICES IDENTIFICATION | C | **D** | | This composite is only used if the buyer knows the type of allowance or charge. |
| 7161 | Special service description code | C an..3 | **R** | | DDA = Dealer discount/allowance (GS1 Code)<br>DDA - A discount is a reduction in price of an item offered on a one off basis. An important distinction to make between a discount and an allowance is that an allowance is a reduction which is offered on a regular basis.<br>TD = Trade discount<br>X40 = Allowance/charge regulated by law (GS1 Code) |
| 1131 | Code list identification code | C an..17 | **O** | | |
| 3055 | Code list responsible agency code | C an..3 | **D** | * | 9 = GS1<br>This data element is only used if an GS1 code is used in data element 7161. |
| 7160 | Special service description | C an..35 | **O** | | |
| 7160 | Special service description | C an..35 | **O** | | |

Segment Notes:

This segment is used to specify any allowances or charges related to the complete order response.
As the calculation price type (data element 5125 PRI segment) used in the purchase order is always a net price, allowances and/or charges specified in the ALC segment are for information purposes only.
If the various allowances and/or charges are applied against a fluctuating price (constantly because of the application of other allowances and/or charges) then the sequence of calculation is indicated using this data element.

## 5. Segments Layout

Segment number: 35

Example:
ALC+A+++1'

## 5. Segments Layout

Segment number: 36

| | | | |
|---|---|---|---|
| **SG19** | - C | 99 - | ALC-ALI-DTM-SG20-SG21-SG22-SG23-SG24 |
| **ALI** | - C | 5 - | Additional information |

Function:

A segment indicating that the allowance or charge specified is subject to special conditions owing to origin, customs preference or commercial factors.

| | | EDIFACT | GS1 | * | Description |
|---|---|---|---|---|---|
| 3239 | Country of origin name code | C an..3 | **O** | | Use ISO 3166 two alpha |
| 9213 | Duty regime type code | C an..3 | **O** | | 1 = Origin subject to EC/EFTA preference<br>2 = Origin subject to other preference agreement |
| 4183 | Special condition code | C an..3 | **O** | | 6 = Subject to bonus<br>8 = Subject to discount |
| 4183 | Special condition code | C an..3 | **O** | | |
| 4183 | Special condition code | C an..3 | **O** | | |
| 4183 | Special condition code | C an..3 | **O** | | |
| 4183 | Special condition code | C an..3 | **O** | | |

Segment Notes:

This segment is used to indicate any special conditions related to the allowances and/or charges specified in the ALC segment.

Example:
ALI+++8'

## 5. Segments Layout

Segment number: 37

| | | | |
|---|---|---|---|
| **SG19** | - C | 99 - | ALC-ALI-DTM-SG20-SG21-SG22-SG23-SG24 |
| **DTM** | - C | 5 - | Date/time/period |

Function:

A segment to identify the date/time/period information related to the allowance or charge, e.g. period of validity.

| | | EDIFACT | GS1 | * | Description |
|---|---|---|---|---|---|
| C507 | DATE/TIME/PERIOD | M | **M** | | |
| 2005 | Date or time or period function code qualifier | M an..3 | **M** | * | 194 = Start date/time<br>206 = End date/time |
| 2380 | Date or time or period value | C an..35 | **R** | | |
| 2379 | Date or time or period format code | C an..3 | **R** | | 102 = CCYYMMDD<br>203 = CCYYMMDDHHMM |

Segment Notes:

This segment is used to indicate any dates related to the allowances or/charges information specified in the ALC segment.

Example:
DTM+194:20021101:102'
DTM+206:20021115:102'
This example indicates that the allowances and/or charges are start on the 1st of November 2002 and finish on the 15th of November 2002.

## 5. Segments Layout

Segment number: 38

| | | | |
|---|---|---|---|
| **SG19** | - C | 99 - | ALC-ALI-DTM-SG20-SG21-SG22-SG23-SG24 |
| **SG20** | - C | 1 - | QTY-RNG |
| **QTY** | - M | 1 - | Quantity |

Function:

A segment identifying the type of quantity and the quantity related to the allowance or charge.

| | | EDIFACT | GS1 | * | Description |
|---|---|---|---|---|---|
| C186 | QUANTITY DETAILS | M | **M** | | |
| 6063 | Quantity type code qualifier | M an..3 | **M** | * | 1 = Discrete quantity |
| 6060 | Quantity | M an..35 | **M** | | |
| 6411 | Measurement unit code | C an..3 | **D** | | This data element is only used if the current product is of variable quantity. |

Segment Notes:

This segment is used to specify quantity allowance/charge information.

Example:
QTY+1:14'

## 5. Segments Layout

Segment number: 39

| | | | |
|---|---|---|---|
| **SG19** | - C | 99 - | ALC-ALI-DTM-SG20-SG21-SG22-SG23-SG24 |
| **SG20** | - C | 1 - | QTY-RNG |
| **RNG** | - C | 1 - | Range details |

Function:

A segment specifying, if required, the range to which the allowance or charge applies.

| | | EDIFACT | GS1 | * | Description |
|---|---|---|---|---|---|
| 6167 | Range type code qualifier | M an..3 | **M** | | 1 = Allowance range<br>2 = Charge range |
| C280 | RANGE | C | **R** | | |
| 6411 | Measurement unit code | M an..3 | **M** | | KGM = kilogram |
| 6162 | Range minimum value | C n..18 | **O** | | |
| 6152 | Range maximum value | C n..18 | **O** | | |

Segment Notes:

This segment is used to specify ranges, which apply to the previous QTY segment.

Example:
RNG+1+KGM:15'

## 5. Segments Layout

Segment number: 40

| | | | |
|---|---|---|---|
| **SG19** | - C | 99 - | ALC-ALI-DTM-SG20-SG21-SG22-SG23-SG24 |
| **SG21** | - C | 1 - | PCD-RNG |
| **PCD** | - M | 1 - | Percentage details |

Function:

A segment identifying the percentage and the percentage basis for the calculation of the allowance or charge.

| | | EDIFACT | GS1 | * | Description |
|---|---|---|---|---|---|
| C501 | PERCENTAGE DETAILS | M | **M** | | |
| 5245 | Percentage type code qualifier | M an..3 | **M** | | 3 = Allowance or charge |
| 5482 | Percentage | C n..10 | **R** | | |
| 5249 | Percentage basis identification code | C an..3 | **O** | | |
| 1131 | Code list identification code | C an..17 | **O** | | |
| 3055 | Code list responsible agency code | C an..3 | **D** | | |
| 4405 | Status description code | C an..3 | **N** | | |

Segment Notes:

This segment is used to specify percentage allowance/charge information.

Example:
PCD+3:1.25'

## 5. Segments Layout

Segment number: 41

| | | | |
|---|---|---|---|
| **SG19** | - C | 99 - | ALC-ALI-DTM-SG20-SG21-SG22-SG23-SG24 |
| **SG21** | - C | 1 - | PCD-RNG |
| **RNG** | - C | 1 - | Range details |

Function:

A segment specifying, if required, a range for the application of the percentage.

| | | EDIFACT | GS1 | * | Description |
|---|---|---|---|---|---|
| 6167 | Range type code qualifier | M an..3 | **M** | | 1 = Allowance range<br>2 = Charge range |
| C280 | RANGE | C | **R** | | |
| 6411 | Measurement unit code | M an..3 | **M** | | KGM = kilogram |
| 6162 | Range minimum value | C n..18 | **O** | | |
| 6152 | Range maximum value | C n..18 | **O** | | |

Segment Notes:

This segment is used to specify ranges, which apply to the previous PCD segment.

Example:
RNG+1+KGM:250:600'

## 5. Segments Layout

Segment number: 42

| | | | |
|---|---|---|---|
| **SG19** | - C | 99 - | ALC-ALI-DTM-SG20-SG21-SG22-SG23-SG24 |
| **SG22** | - C | 2 - | MOA-RNG |
| **MOA** | - M | 1 - | Monetary amount |

Function:

A segment identifying monetary amounts for the allowance or charge.

| | | EDIFACT | GS1 | * | Description |
|---|---|---|---|---|---|
| C516 | MONETARY AMOUNT | M | **M** | | |
| 5025 | Monetary amount type code qualifier | M an..3 | **M** | | 23 = Charge amount<br>178 = Exact amount<br>204 = Allowance amount |
| 5004 | Monetary amount | C n..35 | **R** | | |
| 6345 | Currency identification code | C an..3 | **O** | | Use ISO 4217 three alpha |
| 6343 | Currency type code qualifier | C an..3 | **O** | | |
| 4405 | Status description code | C an..3 | **O** | | |

Segment Notes:

This segment is used to specify monetary amount allowance/charge information.

Example:
MOA+23:500'

## 5. Segments Layout

Segment number: 43

| | | | |
|---|---|---|---|
| **SG19** | - C | 99 - | ALC-ALI-DTM-SG20-SG21-SG22-SG23-SG24 |
| **SG22** | - C | 2 - | MOA-RNG |
| **RNG** | - C | 1 - | Range details |

Function:

A segment specifying, if required, a range for the application of the allowance/charge amount.

| | | EDIFACT | GS1 | * | Description |
|---|---|---|---|---|---|
| 6167 | Range type code qualifier | M an..3 | **M** | | 3 = Monetary range |
| C280 | RANGE | C | **R** | | |
| 6411 | Measurement unit code | M an..3 | **M** | | KGM = kilogram |
| 6162 | Range minimum value | C n..18 | **O** | | |
| 6152 | Range maximum value | C n..18 | **O** | | |

Segment Notes:

This segment is used to specify ranges, which apply to the previous MOA segment.

Example:
RNG+3+KGM:800:1200'

## 5. Segments Layout

Segment number: 44

| | | | |
|---|---|---|---|
| **SG19** | - C | 99 - | ALC-ALI-DTM-SG20-SG21-SG22-SG23-SG24 |
| **SG23** | - C | 1 - | RTE-RNG |
| **RTE** | - M | 1 - | Rate details |

Function:

A segment specifying the rate per unit and the basis for calculation.

| | | EDIFACT | GS1 | * | Description |
|---|---|---|---|---|---|
| C128 | RATE DETAILS | M | **M** | | |
| 5419 | Rate type code qualifier | M an..3 | **M** | | 1 = Allowance rate<br>2 = Charge rate |
| 5420 | Unit price basis rate | M n..15 | **M** | | |
| 5284 | Unit price basis value | C n..9 | **A** | | |
| 6411 | Measurement unit code | C an..3 | **O** | | |
| 4405 | Status description code | C an..3 | **N** | | |

Segment Notes:

This segment is used to specify rate allowance/charge information.

Example:
RTE+2:5.5'

## 5. Segments Layout

Segment number: 45

| | | | |
|---|---|---|---|
| **SG19** | - C | 99 - | ALC-ALI-DTM-SG20-SG21-SG22-SG23-SG24 |
| **SG23** | - C | 1 - | RTE-RNG |
| **RNG** | - C | 1 - | Range details |

Function:

A segment specifying, if required, the range for the application of the allowance/charge rate.

| | | EDIFACT | GS1 | * | Description |
|---|---|---|---|---|---|
| 6167 | Range type code qualifier | M an..3 | **M** | | 1 = Allowance range<br>2 = Charge range |
| C280 | RANGE | C | **R** | | |
| 6411 | Measurement unit code | M an..3 | **M** | | |
| 6162 | Range minimum value | C n..18 | **O** | | |
| 6152 | Range maximum value | C n..18 | **O** | | |

Segment Notes:

This segment is used to specify ranges, which apply to the previous RTE segment.

Example:
RNG+2+KGM:20:100'

## 5. Segments Layout

Segment number: 46

| | | | |
|---|---|---|---|
| **SG19** | - C | 99 - | ALC-ALI-DTM-SG20-SG21-SG22-SG23-SG24 |
| **SG24** | - C | 5 - | TAX-MOA |
| **TAX** | - M | 1 - | Duty/tax/fee details |

Function:

A segment specifying the tax type, category and rate, or exemption, related to the allowance or charge.

| | | EDIFACT | GS1 | * | Description |
|---|---|---|---|---|---|
| 5283 | Duty or tax or fee function code qualifier | M an..3 | **M** | | 5 = Customs duty<br>7 = Tax |
| C241 | DUTY/TAX/FEE TYPE | C | **D** | | |
| 5153 | Duty or tax or fee type name code | C an..3 | **O** | | GST = Goods and services tax<br>VAT = Value added tax |
| 1131 | Code list identification code | C an..17 | **O** | | |
| 3055 | Code list responsible agency code | C an..3 | **D** | | |
| 5152 | Duty or tax or fee type name | C an..35 | **O** | | |
| C533 | DUTY/TAX/FEE ACCOUNT DETAIL | C | **O** | | |
| 5289 | Duty or tax or fee account code | M an..6 | **M** | | |
| 1131 | Code list identification code | C an..17 | **O** | | |
| 3055 | Code list responsible agency code | C an..3 | **D** | | |
| 5286 | Duty or tax or fee assessment basis value | C an..15 | **O** | | |
| C243 | DUTY/TAX/FEE DETAIL | C | **A** | | |
| 5279 | Duty or tax or fee rate code | C an..7 | **O** | | |
| 1131 | Code list identification code | C an..17 | **O** | | |
| 3055 | Code list responsible agency code | C an..3 | **D** | | |
| 5278 | Duty or tax or fee rate | C an..17 | **O** | | |
| 5273 | Duty or tax or fee rate basis code | C an..12 | **O** | | |
| 1131 | Code list identification code | C an..17 | **O** | | |
| 3055 | Code list responsible agency code | C an..3 | **D** | | |
| 5305 | Duty or tax or fee category code | C an..3 | **D** | | A = Mixed tax rate<br>E = Exempt from tax<br>S = Standard rate |
| 3446 | Party tax identifier | C an..20 | **N** | | |
| 1227 | Calculation sequence code | C an..3 | **N** | | |

Segment Notes:

This segment is used to specify tax information related to the allowance or charge information for the full message.

Example:
TAX+7+VAT+++:::17.5+S'

## 5. Segments Layout

Segment number: 46

Dependency Notes:
DE C241 and 5305: Tax types and categories will differ from country to country. They are to be defined by national guidelines.

## 5. Segments Layout

Segment number: 47

| | | | |
|---|---|---|---|
| **SG19** | - C | 99 - | ALC-ALI-DTM-SG20-SG21-SG22-SG23-SG24 |
| **SG24** | - C | 5 - | TAX-MOA |
| **MOA** | - C | 1 - | Monetary amount |

Function:

A segment specifying the tax amount for the allowance or charge.

| | | EDIFACT | GS1 | * | Description |
|---|---|---|---|---|---|
| C516 | MONETARY AMOUNT | M | **M** | | |
| 5025 | Monetary amount type code qualifier | M an..3 | **M** | | 124 = Tax amount<br>125 = Taxable amount |
| 5004 | Monetary amount | C n..35 | **R** | | |
| 6345 | Currency identification code | C an..3 | **N** | | |
| 6343 | Currency type code qualifier | C an..3 | **N** | | |
| 4405 | Status description code | C an..3 | **N** | | |

Segment Notes:

This segment is used to specify monetary amounts related to the tax segment.

Example:
MOA+124:48.90'

## 5. Segments Layout

Segment number: 48

| | | | | |
|---|---|---|---|---|
| **SG26** | - C | 200000 | - | LIN-PIA-IMD-MEA-QTY-ALI-DTM-MOA-GIN-QVR-FTX-SG30-SG31-SG32-SG35-SG36-SG37-SG41-SG47 |
| **LIN** | - M | 1 | - | Line item |

Function:

A segment identifying the line item by the line number and configuration level, and additionally, identifying the product or service ordered. Other product identification numbers, e.g. Buyer product number, etc., can be specified within the following PIA segment.

The following Semantic Note concern the use of D/E 1229 Action Request Code for segment group 26. If the MESSAGE FUNCTION CODE is "30" indicating that there is amended detail data or "34" indicating amendments in the message, only the "amended" or "referenced" LIN segments, and all their subordinate segments, need to be included in the detail section.

If the MESSAGE FUNCTION CODE is other than "30" or "34" there are no amendments to the detail section and the entire section is not required in the message. However for positive acknowledgement purposes, users may wish to resend the entire detail section of the ORDERS or ORDCHG message. The value of the ACTION REQUEST CODE in the included LIN segment will indicate the extent of amendment or reference use.

If the line item has not yet been processed and is not being formally acknowledged an ACTION REQUEST CODE "4" indicates "NO ACTION".

If the seller accepts to supply the line item an ACTION REQUEST CODE (D/E 1229) "5" indicates "ACCEPTED WITHOUT AMENDMENT".

If the seller accepts to supply the line item, but requires one or more amendments to the terms set out in the referenced message, as indicated by the data following the LIN segment. An ACTION REQUEST CODE "6" indicates "ACCEPTED WITH AMENDMENT".

If the seller declines to supply the line items in a Purchase Order, or in a Purchase Order Change Request an ACTION REQUEST CODE "7" indicates "NOT ACCEPTED".

If the seller indicates that a request for change on this line item cannot be processed as the referenced item cannot be located in his application system an ACTION REQUEST CODE "10" indicates "NOT FOUND".

If the line item has not changed in status and no action has been taken, and the item is transmitted for information purposes or positioning an ACTION REQUEST CODE "11" indicates "NOT AMENDED".

| | | EDIFACT | GS1 | * | Description |
|---|---|---|---|---|---|
| 1082 | Line item identifier | C an..6 | **R** | | Application generated number of the count of the order response lines. |

## 5. Segments Layout

| | | | | | |
|---|---|---|---|---|---|
| 1229 | Action request/notification description code | C an..3 | **R** | | 1 = Added<br>3 = Changed<br>4 = No action<br>5 = Accepted without amendment<br>7 = Not accepted<br>DE 1229: Action Request, coded, is the critical DE in this segment. The following code value definitions apply:<br>1 = Addition : The supplier wishes to add a line to the buyer's purchase order. This may happen if the supplier can not accommodate the complete buyer's purchase order for a line in one delivery, and, suggests splitting the order line into two separate deliveries. When this is done each order response line must refer to the same order number and line number.<br>3 = Changed : The supplier accepts to supply the line item in a purchase order or purchase order change |

## 5. Segments Layout

Segment number: 48

| | | EDIFACT | GS1 | * | Description |
|---|---|---|---|---|---|
| | | | | | request, but requires one or more changes to the terms set out in the referenced message, as indicated by the data in, and following, the LIN segment. The buyer must acknowledge these requirements by sending a new purchase order or purchase order change request.<br>4 = No Action : The supplier has not yet processed the referenced line item from a purchase order or purchase order change request.<br>5 = Accepted : The supplier accepts to supply the line item in a purchase order or purchase order change request. Though it is not necessary to re-transmit unamended line items or cancellations, this may be done for confirmation.<br>7 = Not Accepted : The supplier declines to supply the line item in a purchase order or purchase order change request. |
| C212 | ITEM NUMBER IDENTIFICATION | C | **D** | | This composite will only be used for the identification of GS1 codes. If another coding structure is being used, e.g. HIBC, this composite will not be used and the code will be detailed in the PIA segment. |
| 7140 | Item identifier | C an..35 | **R** | | Format n..14<br>GTIN - this is the number of the article being ordered. |
| 7143 | Item type identification code | C an..3 | **R** | * | SRV = GS1 Global Trade Item Number |
| 1131 | Code list identification code | C an..17 | **N** | | |
| 3055 | Code list responsible agency code | C an..3 | **N** | | |
| C829 | SUB-LINE INFORMATION | C | **D** | | |
| 5495 | Sub-line indicator code | C an..3 | **R** | * | 1 = Sub-line information |
| 1082 | Line item identifier | C an..6 | **R** | | |
| 1222 | Configuration level number | C n..2 | **N** | | |
| 7083 | Configuration operation code | C an..3 | **N** | | |

Segment Notes:

This segment is used to identify the product being responded to by means of an GTIN.
If Global Trade Item Numbers are available it is mandatory to use GTIN within the LIN segment.
The detail section of the Purchase Order Response is formed by a repeating group of segments, always starting with the LIN segment.

Example:
LIN+1+3+5412345111115:SRV'

Dependency Notes:
C829 is only used when sub-lines are required.
FOR A COMPLETE DESCRIPTION ON THE USAGE OF SUB-LINES PLEASE REFER TO PART I, SECTION 4.10.

## 5. Segments Layout

Segment number: 49

| | | | | |
|---|---|---|---|---|
| **SG26** | - C | 200000 | - | LIN-PIA-IMD-MEA-QTY-ALI-DTM-MOA-GIN-QVR-FTX-SG30-SG31-SG32-SG35-SG36-SG37-SG41-SG47 |
| **PIA** | - C | 25 | - | Additional product id |

Function:

A segment providing either additional identification to the product specified in the LIN segment (e.g. Harmonized System number), or provides any substitute product identification.

| | | EDIFACT | GS1 | * | Description |
|---|---|---|---|---|---|
| 4347 | Product identifier code qualifier | M an..3 | **M** | * | 1 = Additional identification<br>3 = Substituted by<br>4 = Substituted for<br>5 = Product identification<br>DE 4347: Product Id function coded has the following restricted coded functions:<br>1 - Additional Identification - To provide an additional identification for the product previously identified in the LIN segment. The additional identification can consist of :<br>A supplemental identification which provides more information complementary to the GTIN provided in the LIN segment, e.g., a batch number, promotional variant number, product group number, etc.<br>An alternative identification which may be used where no GTIN has been provided in the LIN segment, e.g., a buyers or sellers article number, an HIBC code, etc.<br>3 - Substituted by - To provide the GTIN of a product which has substituted the product identified by the GTIN provided in the LIN segment.<br>In the Purchase Order Response this function code may be used to inform trading partners of the GTIN of the product which is replacing the product originally ordered, identified in the LIN segment. In this case, segment LIN will refer to the original ordered product and the PIA segment will provide the GTIN of the product replacing or substituting the original ordered product.<br>4 - Substituted for - To provide the GTIN of a product which has been substituted for the product identified by the GTIN provided in the LIN segment.<br>In the Purchase Order Response this function code may be used to inform trading partners of an GTIN change relevant to a product. In this case, the LIN segment will contain the new GTIN and the 'Substituted for' PIA segment will identify the old GTIN which has been substituted.<br>5 - Product Identification - To provide the primary product identification code when no GTIN has been provided in the LIN segment. |
| C212 | ITEM NUMBER IDENTIFICATION | M | **M** | | |
| 7140 | Item identifier | C an..35 | **R** | | |

## 5. Segments Layout

| | | | | | |
|---|---|---|---|---|---|
| 7143 | Item type identification code | C an..3 | **R** | | AC = HIBC (Health Industry Bar Code)<br>CG = Commodity grouping<br>IB = ISBN (International Standard Book Number)<br>IN = Buyer's item number<br>IT = Buyer's style number |

## 5. Segments Layout

Segment number: 49

| | | EDIFACT | GS1 | * | Description |
|---|---|---|---|---|---|
| | | | | | SA = Supplier's article number<br>ST = Style number<br>SRV = GS1 Global Trade Item Number |
| 1131 | Code list identification code | C an..17 | **O** | | |
| 3055 | Code list responsible agency code | C an..3 | **D** | | 9 = GS1<br>91 = Assigned by supplier or supplier's agent<br>92 = Assigned by buyer or buyer's agent |
| C212 | ITEM NUMBER IDENTIFICATION | C | **O** | | |
| 7140 | Item identifier | C an..35 | **R** | | |
| 7143 | Item type identification code | C an..3 | **R** | | |
| 1131 | Code list identification code | C an..17 | **O** | | |
| 3055 | Code list responsible agency code | C an..3 | **D** | | |
| C212 | ITEM NUMBER IDENTIFICATION | C | **O** | | |
| 7140 | Item identifier | C an..35 | **R** | | |
| 7143 | Item type identification code | C an..3 | **R** | | |
| 1131 | Code list identification code | C an..17 | **O** | | |
| 3055 | Code list responsible agency code | C an..3 | **D** | | |
| C212 | ITEM NUMBER IDENTIFICATION | C | **O** | | |
| 7140 | Item identifier | C an..35 | **R** | | |
| 7143 | Item type identification code | C an..3 | **R** | | |
| 1131 | Code list identification code | C an..17 | **O** | | |
| 3055 | Code list responsible agency code | C an..3 | **D** | | |
| C212 | ITEM NUMBER IDENTIFICATION | C | **O** | | |
| 7140 | Item identifier | C an..35 | **R** | | |
| 7143 | Item type identification code | C an..3 | **R** | | |
| 1131 | Code list identification code | C an..17 | **O** | | |
| 3055 | Code list responsible agency code | C an..3 | **D** | | |

Segment Notes:

This segment is used to specify additional or substitutional item identification codes such as a buyers, or sellers item number.

Example:
PIA+1+ABC1234:IN'
In this example the PIA segment is used to provide an additional identification to the GTIN provided in the LIN segment. The GTIN 5412345111115 provided in the LIN segment refers to the internal buyer's item number ABC1234.

PIA+3+5412345111184:SRV'
In this example the PIA segment is used to provide an GTIN of the product which is replacing the original ordered

## 5. Segments Layout

Segment number: 49

product, identified in the LIN segment by the GTIN 5412345111115.

PIA+5+2209953C001L:AC'
This example details the HIBC code 2209953C001L which is provided as the primary product code because no GTIN was provided in the LIN segment.

## 5. Segments Layout

Segment number: 50

| | | | |
|---|---|---|---|
| **SG26** | - C | 200000 - | LIN-PIA-IMD-MEA-QTY-ALI-DTM-MOA-GIN-QVR-FTX-SG30-SG31-SG32-SG35-SG36-SG37-SG41-SG47 |
| **IMD** | - C | 99 - | Item description |

Function:

A segment for describing the product or service being ordered as well as product characteristic. This segment should be used for products or services that cannot be fully identified by a product code or article number.

| | | EDIFACT | GS1 | * | Description |
|---|---|---|---|---|---|
| 7077 | Description format code | C an..3 | **O** | * | A = Free-form long description<br>C = Code (from industry code list)<br>E = Free-form short description<br>F = Free-form<br>S = Structured (from industry code list)<br>B = Code and text |
| C272 | ITEM CHARACTERISTIC | C | **O** | | |
| 7081 | Item characteristic code | C an..3 | **R** | | 98 = Size |
| 1131 | Code list identification code | C an..17 | **O** | | |
| 3055 | Code list responsible agency code | C an..3 | **D** | * | 9 = GS1<br>Must be used if DE7081 contains an GS1 code. |
| C273 | ITEM DESCRIPTION | C | **A** | | |
| 7009 | Item description code | C an..17 | **O** | | CU = Consumer unit (GS1 Permanent Code)<br>DU = Despatch unit (GS1 Permanent Code)<br>TU = Traded unit (GS1 Permanent Code)<br>VQ = Variable quantity product (GS1 Permanent Code) |
| 1131 | Code list identification code | C an..17 | **O** | | |
| 3055 | Code list responsible agency code | C an..3 | **D** | | 9 = GS1<br>83 = US, National Retail Federation |
| 7008 | Item description | C an..256 | **O** | | |
| 7008 | Item description | C an..256 | **O** | | |
| 3453 | Language name code | C an..3 | **O** | | |
| 7383 | Surface or layer code | C an..3 | **N** | | |

Segment Notes:

This segment is used to describe the current line item.
It is recommended that this segment only be used for coded descriptions. Data element 7008 in clear text should only be used when no product code is available or when free-form descriptions are required by trading partners.
If you wish to indicate that promotional details are marked on the package, then this should be indicated in DE 7233 in the PAC segment.

Example:
IMD+C++TU::9'
IMD+F++:::CORN CRISPIES:CASE'

## 5. Segments Layout

Segment number: 51

| | | | |
|---|---|---|---|
| **SG26** | - C | 200000 - | LIN-PIA-IMD-MEA-QTY-ALI-DTM-MOA-GIN-QVR-FTX-SG30-SG31-SG32-SG35-SG36-SG37-SG41-SG47 |
| **MEA** | - C | 99 - | Measurements |

Function:

A segment enabling the physical measurements of the ordered item to be specified where this is required for full identification of the product. Any measurements must refer to the product in its unpacked form. e.g. thickness of plastic film, length, weight, etc.

| | | EDIFACT | GS1 | * | Description |
|---|---|---|---|---|---|
| 6311 | Measurement purpose code qualifier | M an..3 | **M** | | PD = Physical dimensions (product ordered) |
| C502 | MEASUREMENT DETAILS | C | **A** | | |
| 6313 | Measured attribute code | C an..3 | **A** | | DI = Diameter<br>DP = Depth<br>HT = Height dimension<br>ID = Inside diameter<br>LN = Length dimension<br>OD = Outside diameter<br>TH = Thickness |
| 6321 | Measurement significance code | C an..3 | **O** | | 3 = Approximately<br>4 = Equal to |
| 6155 | Non-discrete measurement name code | C an..17 | **O** | | |
| 6154 | Non-discrete measurement name | C an..70 | **N** | | |
| C174 | VALUE/RANGE | C | **R** | | |
| 6411 | Measurement unit code | M an..3 | **M** | | CMT = centimetre<br>FOT = foot<br>MMT = millimetre<br>MTR = metre<br>YRD = yard |
| 6314 | Measurement value | C an..18 | **O** | | |
| 6162 | Range minimum value | C n..18 | **O** | | |
| 6152 | Range maximum value | C n..18 | **O** | | |
| 6432 | Significant digits quantity | C n..2 | **O** | | |
| 7383 | Surface or layer code | C an..3 | **N** | | |

Segment Notes:

This segment is used to specify the actual physical dimensions of the product being ordered where that product is sold in variable lengths or volumes.
This segment must be used in conjunction with the LIN segment for the precise identification of the ordered product.

Example:
MEA+PD+LN:4+MTR:4.6'
The precise length of the product identified by the GTIN 5412345111115 is 4.6 metres.

## 5. Segments Layout

Segment number: 52

| | | | |
|---|---|---|---|
| **SG26** | - C | 200000 - | LIN-PIA-IMD-MEA-QTY-ALI-DTM-MOA-GIN-QVR-FTX-SG30-SG31-SG32-SG35-SG36-SG37-SG41-SG47 |
| **QTY** | - C | 99 - | Quantity |

Function:

A segment identifying the product quantities e.g. ordered quantity.

| | | EDIFACT | GS1 | * | Description |
|---|---|---|---|---|---|
| C186 | QUANTITY DETAILS | M | **M** | | |
| 6063 | Quantity type code qualifier | M an..3 | **M** | * | 1 = Discrete quantity<br>12 = Despatch quantity<br>17 = Quantity on hand<br>21 = Ordered quantity<br>47 = Invoiced quantity<br>52 = Quantity per pack<br>53 = Minimum order quantity<br>54 = Maximum order quantity<br>59 = Number of consumer units in the traded unit<br>83 = Backorder quantity<br>113 = Quantity to be delivered<br>170 = Allocated quantity<br>192 = Free goods quantity<br>246 = Returns replacement quantity<br>Code value '59' is only to be used in the Purchase Order Response for confirmation purposes and not to change any information previously agreed and contained in a price or product catalogue. |
| 6060 | Quantity | M an..35 | **M** | | |
| 6411 | Measurement unit code | C an..3 | **D** | | KGM = kilogram<br>PND = Pound (GS1 Code)<br>This DE is only used if the product being responded to is a variable quantity product. |

Segment Notes:

This segment is used to specify quantity information related to the current line item.
If split deliveries are being used, the quantities for the split delivery are specified in segment group 35. The totals for all quantities expressed in the QTY's at segment group level must equal the value in this QTY segment.

Example:
QTY+21:48:KGM'

## 5. Segments Layout

Segment number: 53

| | | | |
|---|---|---|---|
| **SG26** | - C | 200000 - | LIN-PIA-IMD-MEA-QTY-ALI-DTM-MOA-GIN-QVR-FTX-SG30-SG31-SG32-SG35-SG36-SG37-SG41-SG47 |
| **ALI** | - C | 5 - | Additional information |

Function:

To indicate that special conditions due to the origin, customs preference, fiscal or commercial factors are applicable.

| | | EDIFACT | GS1 | * | Description |
|---|---|---|---|---|---|
| 3239 | Country of origin name code | C an..3 | **O** | | |
| 9213 | Duty regime type code | C an..3 | **O** | | |
| 4183 | Special condition code | C an..3 | **O** | | 151 = Items from the same dye lot |
| 4183 | Special condition code | C an..3 | **O** | | |
| 4183 | Special condition code | C an..3 | **O** | | |
| 4183 | Special condition code | C an..3 | **O** | | |
| 4183 | Special condition code | C an..3 | **O** | | |

Segment Notes:

This segment is used to specify any additional information related to the current line item.

Example:
ALI+++151'

## 5. Segments Layout

Segment number: 54

| | | | |
|---|---|---|---|
| **SG26** | - C | 200000 - | LIN-PIA-IMD-MEA-QTY-ALI-DTM-MOA-GIN-QVR-FTX-SG30-SG31-SG32-SG35-SG36-SG37-SG41-SG47 |
| **DTM** | - C | 35 - | Date/time/period |

Function:

A segment specifying date/time/period details relating to the line item only.

| | | EDIFACT | GS1 | * | Description |
|---|---|---|---|---|---|
| C507 | DATE/TIME/PERIOD | M | **M** | | |
| 2005 | Date or time or period function code qualifier | M an..3 | **M** | * | 2 = Delivery date/time, requested<br>8 = Order received date/time<br>11 = Despatch date and/or time<br>15 = Promotion start date/time<br>17 = Delivery date/time, estimated<br>44 = Availability<br>61 = Cancel if not delivered by this date<br>63 = Delivery date/time, latest<br>64 = Delivery date/time, earliest<br>69 = Delivery date/time, promised for<br>76 = Delivery date/time, scheduled for<br>X14 = Requested for delivery week commencing (GS1 Temporary Code)<br>200 = Pick-up/collection date/time of cargo<br>364 = Minimum shelf life remaining at time of despatch period<br>382 = Earliest sale date<br>506 = Back order delivery date/time/period<br>Code value '44' is used to indicate the date on which a product, which is currently not available, will again be available. |
| 2380 | Date or time or period value | C an..35 | **R** | | |
| 2379 | Date or time or period format code | C an..3 | **R** | | 102 = CCYYMMDD<br>203 = CCYYMMDDHHMM<br>718 = CCYYMMDD-CCYYMMDD |

Segment Notes:

This segment is used to specify any dates related to the current line item.

Example:
DTM+2:20020910:102'
This example requests delivery to be made on the 10th of September 2002.

## 5. Segments Layout

Segment number: 55

| | | | |
|---|---|---|---|
| **SG26** | - C | 200000 - | LIN-PIA-IMD-MEA-QTY-ALI-DTM-MOA-GIN-QVR-FTX-SG30-SG31-SG32-SG35-SG36-SG37-SG41-SG47 |
| **MOA** | - C | 10 - | Monetary amount |

Function:

A segment specifying any monetary amounts relating to the product, e.g. item amount, insurance value, customs value.

| | | EDIFACT | GS1 | * | Description |
|---|---|---|---|---|---|
| C516 | MONETARY AMOUNT | M | **M** | | |
| 5025 | Monetary amount type code qualifier | M an..3 | **M** | | 40 = Customs value<br>203 = Line item amount<br>388 = Total amount including Value Added Tax (VAT) |
| 5004 | Monetary amount | C n..35 | **R** | | |
| 6345 | Currency identification code | C an..3 | **N** | | |
| 6343 | Currency type code qualifier | C an..3 | **N** | | |
| 4405 | Status description code | C an..3 | **N** | | |

Segment Notes:

This segment can be used for two purposes, firstly, when allowances/charges are involved, to indicate net amounts for the line, and secondly, to provide valuation amounts, e.g., customs value.

Example:
MOA+203:1253.42'

## 5. Segments Layout

Segment number: 56

| | | | |
|---|---|---|---|
| **SG26** | - C | 200000 - | LIN-PIA-IMD-MEA-QTY-ALI-DTM-MOA-GIN-QVR-FTX-SG30-SG31-SG32-SG35-SG36-SG37-SG41-SG47 |
| **GIN** | - C | 1000 - | Goods identity number |

Function:

A segment providing identity numbers to be applied to the goods being ordered, e.g. serial numbers for assembled equipment.

| | | EDIFACT | GS1 | * | Description |
|---|---|---|---|---|---|
| 7405 | Object identification code qualifier | M an..3 | **M** | | CPE = Coupon number (GS1 Code)<br>CQE = Cheque number (GS1 Code) |
| C208 | IDENTITY NUMBER RANGE | M | **M** | | |
| 7402 | Object identifier | M an..35 | **M** | | |
| 7402 | Object identifier | C an..35 | **O** | | |
| C208 | IDENTITY NUMBER RANGE | C | **O** | | |
| 7402 | Object identifier | M an..35 | **M** | | |
| 7402 | Object identifier | C an..35 | **O** | | |
| C208 | IDENTITY NUMBER RANGE | C | **O** | | |
| 7402 | Object identifier | M an..35 | **M** | | |
| 7402 | Object identifier | C an..35 | **O** | | |
| C208 | IDENTITY NUMBER RANGE | C | **O** | | |
| 7402 | Object identifier | M an..35 | **M** | | |
| 7402 | Object identifier | C an..35 | **O** | | |
| C208 | IDENTITY NUMBER RANGE | C | **O** | | |
| 7402 | Object identifier | M an..35 | **M** | | |
| 7402 | Object identifier | C an..35 | **O** | | |

Segment Notes:

This segment is used to indicate individual numbers, or a range of numbers, to be printed on coupons or gift cheques.

Example:
GIN+CPE+AS-1299:AS-1350'

## 5. Segments Layout

Segment number: 57

| | | | |
|---|---|---|---|
| **SG26** | - C | 200000 - | LIN-PIA-IMD-MEA-QTY-ALI-DTM-MOA-GIN-QVR-FTX-SG30-SG31-SG32-SG35-SG36-SG37-SG41-SG47 |
| **QVR** | - C | 1 - | Quantity variances |

Function:

A segment identifying order quantity variances, normally specified by the supplier using an Order Response message.

| | | EDIFACT | GS1 | * | Description |
|---|---|---|---|---|---|
| C279 | QUANTITY DIFFERENCE INFORMATION | C | **A** | | |
| 6064 | Quantity variance value | M n..15 | **M** | | Specify the actual variance amount here. |
| 6063 | Quantity type code qualifier | C an..3 | **R** | | 21 = Ordered quantity |
| 4221 | Discrepancy nature identification code | C an..3 | **O** | | BP = Shipment partial - back order to follow<br>CP = Shipment partial - considered complete, no backorder |
| C960 | REASON FOR CHANGE | C | **O** | | |
| 4295 | Change reason description code | C an..3 | **O** | | AUE = Article code unknown (GS1 Code)<br>PC = Pack difference |
| 1131 | Code list identification code | C an..17 | **O** | | |
| 3055 | Code list responsible agency code | C an..3 | **D** | | |
| 4294 | Change reason description | C an..35 | **O** | | |

Segment Notes:

This segment is used to specify quantity variances and reasons for variances between what was ordered and what is available as specified in the QTY segment at line level.
For negative values (e.g. partial shipments) the variance must be expressed as negative.

Example:
QVR+-20:21++AUE'
20 units of the original ordered quantity are not available because the item identification code is unknown.

## 5. Segments Layout

Segment number: 58

| | | | |
|---|---|---|---|
| **SG26** | - C | 200000 - | LIN-PIA-IMD-MEA-QTY-ALI-DTM-MOA-GIN-QVR-FTX-SG30-SG31-SG32-SG35-SG36-SG37-SG41-SG47 |
| **FTX** | - C | 99 - | Free text |

Function:

A segment with free text information, in coded or clear form, used when additional information is needed but cannot be accommodated within other segments. In computer to computer exchanges such text will normally require the receiver to process this segment manually.

| | | EDIFACT | GS1 | * | Description |
|---|---|---|---|---|---|
| 4451 | Text subject code qualifier | M an..3 | **M** | | PUR = Purchasing information<br>QQD = Quality demands/requirements<br>ZZZ = Mutually defined |
| 4453 | Free text function code | C an..3 | **O** | | This data element is only used when non-coded free text has been provided in data element C108. |
| C107 | TEXT REFERENCE | C | **D** | | Reference to a standard text.<br>This composite is only used when trading partners have agreed to use mutually defined code values. |
| 4441 | Free text value code | M an..17 | **M** | | 001 = ...standard text... |
| 1131 | Code list identification code | C an..17 | **O** | | |
| 3055 | Code list responsible agency code | C an..3 | **D** | | 91 = Assigned by supplier or supplier's agent<br>92 = Assigned by buyer or buyer's agent |
| C108 | TEXT LITERAL | C | **D** | | This composite is only used if coded text can not be used. |
| 4440 | Free text value | M an..512 | **M** | | |
| 4440 | Free text value | C an..512 | **O** | | |
| 4440 | Free text value | C an..512 | **O** | | |
| 4440 | Free text value | C an..512 | **O** | | |
| 4440 | Free text value | C an..512 | **O** | | |
| 3453 | Language name code | C an..3 | **D** | | ISO 639 two alpha code |
| 4447 | Free text format code | C an..3 | **N** | | |

Segment Notes:

This segment is used to specify any special requirements for the current line item.
Use of this segment in free form is not recommended since it may inhibit automatic processing of the Order Response. Coded references to standard texts is an available functionality which enables automatic processing and reduces transmission and processing overheads. Standard texts should be mutually defined among trading partners and can be used to cover legal and other requirements.

Example:
FTX+ZZZ+1+001::91'

## 5. Segments Layout

Segment number: 59

| | | | | |
|---|---|---|---|---|
| **SG26** | - C | 200000 | - | LIN-PIA-IMD-MEA-QTY-ALI-DTM-MOA-GIN-QVR-FTX-SG30-SG31-SG32-SG35-SG36-SG37-SG41-SG47 |
| **SG30** | - C | 25 | - | PRI-CUX-DTM |
| **PRI** | - M | 1 | - | Price details |

Function:

A segment to specify the price type and amount. The price used in the calculation of the line amount will be identified as 'Unit Price'.

| | | EDIFACT | GS1 | * | Description |
|---|---|---|---|---|---|
| C509 | PRICE INFORMATION | C | **R** | | |
| 5125 | Price code qualifier | M an..3 | **M** | | AAA = Calculation net<br>AAE = Information price, excluding allowances or charges, including taxes<br>AAF = Information price, excluding allowances or charges and taxes<br>AAA - The price stated is the net price including all allowances and charges and excluding taxes. Allowances and charges may be stated for information purposes only.<br>AAH = Subject to escalation and price adjustment<br>AAQ = Firm price<br>ABL = Base price<br>ABM = Base price difference<br>Use the codes AAH, AAQ, ABL, ABM when dealing with CSA (customer specific articles). |
| 5118 | Price amount | C n..15 | **R** | | |
| 5375 | Price type code | C an..3 | **O** | | CT = Contract<br>CA = Catalogue |
| 5387 | Price specification code | C an..3 | **O** | | AAE = Not subject to fluctuation<br>ALT = Alternate price<br>DPR = Discount price<br>EUP = Expected unit price<br>LBL = Labelling price<br>PRP = Promotional price<br>RTP = Retail price<br>SRP = Suggested retail price |
| 5284 | Unit price basis value | C n..9 | **D** | | |
| 6411 | Measurement unit code | C an..3 | **D** | | KGM = kilogram |
| 5213 | Sub-line item price change operation code | C an..3 | **N** | | |

Segment Notes:

This segment is used to provide price information for the current line item.
The calculation price detailed in the Order Response will always be the Net Unit Price, i.e., Gross Price + Charges - Allowances.

Example:
PRI+AAA:14.58:CT:AAE'

Dependency Notes:
Data elements 5284 and 6411 are used when a product is a variable quantity product, e.g. price per 200 kilos, or when the unit of measure for purchasing, delivery, and invoicing are different for a product, e.g. sugar is not a variable quantity product but ordered and delivered in packs, and invoiced in kilos or tonnes.

## 5. Segments Layout

Segment number: 60

| | | | |
|---|---|---|---|
| **SG26** | - C | 200000 - | LIN-PIA-IMD-MEA-QTY-ALI-DTM-MOA-GIN-QVR-FTX-SG30-SG31-SG32-SG35-SG36-SG37-SG41-SG47 |
| **SG30** | - C | 25 - | PRI-CUX-DTM |
| **CUX** | - C | 1 - | Currencies |

Function:

A segment to allow to specify the price in a different currency that in segment group 7.

| | | EDIFACT | GS1 | * | Description |
|---|---|---|---|---|---|
| C504 | CURRENCY DETAILS | C | **R** | | |
| 6347 | Currency usage code qualifier | M an..3 | **M** | * | 2 = Reference currency |
| 6345 | Currency identification code | C an..3 | **R** | | ISO 4217 three alpha |
| 6343 | Currency type code qualifier | C an..3 | **R** | * | 4 = Invoicing currency<br>9 = Order currency<br>10 = Pricing currency<br>12 = Quotation currency |
| 6348 | Currency rate value | C n..4 | **N** | | |
| C504 | CURRENCY DETAILS | C | **D** | | The second occurrence of this composite is only used if a target currency is being specified. |
| 6347 | Currency usage code qualifier | M an..3 | **M** | * | 3 = Target currency |
| 6345 | Currency identification code | C an..3 | **R** | | ISO 4217 three alpha |
| 6343 | Currency type code qualifier | C an..3 | **R** | * | 4 = Invoicing currency<br>9 = Order currency<br>10 = Pricing currency<br>12 = Quotation currency |
| 6348 | Currency rate value | C n..4 | **O** | | |
| 5402 | Currency exchange rate | C n..12 | **D** | | The rate of exchange is only used if a target currency has been identified in the second occurrence of C504. |
| 6341 | Exchange rate currency market identifier | C an..3 | **N** | | |

Segment Notes:

This segment is used to specify currency data related to the previous PRI segment.
The CUX segment is mandatory for international exchanges.
This segment is used to indicate the currency, which applies to the price for the current line item.
When specifying Reference and Target Currencies for international trade, one occurrence of CUX is all that is required. The reference currency is identified in the first occurrence of composite C504, with the target currency specified in the second occurrence of C504. The rate of exchange between the two is detailed in DE 5402.

Example:
CUX+2:EUR:9'
CUX+2:EUR:9+3:USD:4+0.90243'

## 5. Segments Layout

Segment number: 61

| | | | | |
|---|---|---|---|---|
| **SG26** | - C | 200000 | - | LIN-PIA-IMD-MEA-QTY-ALI-DTM-MOA-GIN-QVR-FTX-SG30-SG31-SG32-SG35-SG36-SG37-SG41-SG47 |
| **SG30** | - C | 25 | - | PRI-CUX-DTM |
| **DTM** | - C | 5 | - | Date/time/period |

Function:

A segment to identify the date/time/period information related to the price change. e.g. period of validity.

| | | EDIFACT | GS1 | * | Description |
|---|---|---|---|---|---|
| C507 | DATE/TIME/PERIOD | M | **M** | | |
| 2005 | Date or time or period function code qualifier | M an..3 | **M** | | 21E = End validity date (GS1 Code) |
| 2380 | Date or time or period value | C an..35 | **R** | | |
| 2379 | Date or time or period format code | C an..3 | **R** | | 102 = CCYYMMDD<br>203 = CCYYMMDDHHMM<br>718 = CCYYMMDD-CCYYMMDD |

Segment Notes:

This segment is used to specify the dates (and possibly times) associated with the price of the currently identified product.

Example:
DTM+21E:19991231:102'

## 5. Segments Layout

Segment number: 62

| | | | |
|---|---|---|---|
| **SG26** | - C | 200000 - | LIN-PIA-IMD-MEA-QTY-ALI-DTM-MOA-GIN-QVR-FTX-SG30-SG31-SG32-SG35-SG36-SG37-SG41-SG47 |
| **SG31** | - C | 9999 - | RFF-DTM |
| **RFF** | - M | 1 - | Reference |

Function:

A segment identifying the reference by its number and where appropriate a line number within a document.

| | | EDIFACT | GS1 | * | Description |
|---|---|---|---|---|---|
| C506 | REFERENCE | M | **M** | | |
| 1153 | Reference code qualifier | M an..3 | **M** | | ACD = Additional reference number<br>BO = Blanket order number<br>CR = Customer reference number<br>CT = Contract number<br>GC = Government contract number<br>IP = Import licence number<br>ON = Order number (buyer)<br>PL = Price list number<br>POR = Purchase order response number<br>PP = Purchase order change number<br>PW = Prior purchase order number<br>VN = Order number (supplier)<br>AE = Authorization for expense (AFE) number<br>AKO = Action authorization number<br>ANJ = Authorization number |
| 1154 | Reference identifier | C an..70 | **R** | | |
| 1156 | Document line identifier | C an..6 | **D** | | Line number from original order.<br>This data element is only used to reference line numbers from previous orders, purchase order changes, or purchase order responses. |
| 4000 | Reference version identifier | C an..35 | **N** | | |
| 1060 | Revision identifier | C an..6 | **N** | | |

Segment Notes:

This segment is used to specify any references, which are applicable to the current line item only. References stated here will override those specified in the heading section when the same qualifier is used.

Example:
RFF+PL:4502'
This example refers to a price list reference number 4502.

RFF+ON:62114:6'
This example references line number 6 of the buyers order number 62114.

## 5. Segments Layout

Segment number: 63

| | | | | |
|---|---|---|---|---|
| **SG26** | - C | 200000 | - | LIN-PIA-IMD-MEA-QTY-ALI-DTM-MOA-GIN-QVR-FTX-SG30-SG31-SG32-SG35-SG36-SG37-SG41-SG47 |
| **SG31** | - C | 9999 | - | RFF-DTM |
| **DTM** | - C | 5 | - | Date/time/period |

Function:

A segment specifying the date/time related to the reference.

| | | EDIFACT | GS1 | * | Description |
|---|---|---|---|---|---|
| C507 | DATE/TIME/PERIOD | M | **M** | | |
| 2005 | Date or time or period function code qualifier | M an..3 | **M** | * | 171 = Reference date/time<br>194 = Start date/time<br>206 = End date/time |
| 2380 | Date or time or period value | C an..35 | **R** | | |
| 2379 | Date or time or period format code | C an..3 | **R** | | 102 = CCYYMMDD<br>203 = CCYYMMDDHHMM |

Segment Notes:

This segment is used to specify dates and times associated with the preceding RFF segment.

Example:
DTM+171:20020801:102'

## 5. Segments Layout

Segment number: 64

| | | | |
|---|---|---|---|
| **SG26** | - C | 200000 - | LIN-PIA-IMD-MEA-QTY-ALI-DTM-MOA-GIN-QVR-FTX-SG30-SG31-SG32-SG35-SG36-SG37-SG41-SG47 |
| **SG32** | - C | 99 - | PAC-MEA-QTY-SG34 |
| **PAC** | - M | 1 - | Package |

Function:

A segment specifying the number of packages and the physical type of packaging for the line item, e.g. pallet type.

| | | EDIFACT | GS1 | * | Description |
|---|---|---|---|---|---|
| 7224 | Package quantity | C n..8 | **O** | | |
| C531 | PACKAGING DETAILS | C | **O** | | |
| 7075 | Packaging level code | C an..3 | **O** | | 1 = Inner<br>3 = Outer |
| 7233 | Packaging related description code | C an..3 | **O** | | 50 = Package barcoded EAN-13 or EAN-8<br>51 = Package barcoded ITF-14<br>52 = Package barcoded UCC or EAN-128 |
| 7073 | Packaging terms and conditions code | C an..3 | **O** | | 1 = Packaging cost paid by supplier<br>2 = Packaging cost paid by recipient<br>3 = Packaging cost not charged (returnable) |
| C202 | PACKAGE TYPE | C | **O** | | |
| 7065 | Package type description code | C an..17 | **A** | | AE = Aerosol<br>CS = Case<br>CX = Can, cylindrical |
| 1131 | Code list identification code | C an..17 | **O** | | |
| 3055 | Code list responsible agency code | C an..3 | **D** | | |
| 7064 | Type of packages | C an..35 | **O** | | |
| C402 | PACKAGE TYPE IDENTIFICATION | C | **N** | | |
| 7077 | Description format code | M an..3 | | | |
| 7064 | Type of packages | M an..35 | | | |
| 7143 | Item type identification code | C an..3 | | | |
| 7064 | Type of packages | C an..35 | | | |
| 7143 | Item type identification code | C an..3 | | | |
| C532 | RETURNABLE PACKAGE DETAILS | C | **D** | | Composite C532 is only used where the packaging being described is returnable. This composite identifies who is responsible for the payment of its return. |
| 8395 | Returnable package freight payment responsibility code | C an..3 | **O** | | 1 = Paid by customer<br>3 = Paid by supplier |
| 8393 | Returnable package load contents code | C an..3 | **N** | | |

Segment Notes:

This segment is used to indicate the packaging details for the current line item.

Example:
PAC+++CS'

## 5. Segments Layout

Segment number: 65

| | | | |
|---|---|---|---|
| **SG26** | - C | 200000 - | LIN-PIA-IMD-MEA-QTY-ALI-DTM-MOA-GIN-QVR-FTX-SG30-SG31-SG32-SG35-SG36-SG37-SG41-SG47 |
| **SG32** | - C | 99 - | PAC-MEA-QTY-SG34 |
| **MEA** | - C | 5 - | Measurements |

Function:

A segment specifying physical measurements of packages described in the PAC segment. e.g. cube or gross weight.

| | | EDIFACT | GS1 | * | Description |
|---|---|---|---|---|---|
| 6311 | Measurement purpose code qualifier | M an..3 | **M** | | PD = Physical dimensions (product ordered) |
| C502 | MEASUREMENT DETAILS | C | **A** | | |
| 6313 | Measured attribute code | C an..3 | **A** | | DI = Diameter<br>DP = Depth<br>HT = Height dimension<br>ID = Inside diameter<br>LN = Length dimension<br>OD = Outside diameter<br>TH = Thickness |
| 6321 | Measurement significance code | C an..3 | **O** | | 3 = Approximately<br>4 = Equal to |
| 6155 | Non-discrete measurement name code | C an..17 | **O** | | |
| 6154 | Non-discrete measurement name | C an..70 | **N** | | |
| C174 | VALUE/RANGE | C | **R** | | |
| 6411 | Measurement unit code | M an..3 | **M** | | CMT = centimetre<br>FOT = foot<br>MMT = millimetre<br>MTR = metre<br>YRD = yard |
| 6314 | Measurement value | C an..18 | **O** | | |
| 6162 | Range minimum value | C n..18 | **O** | | |
| 6152 | Range maximum value | C n..18 | **O** | | |
| 6432 | Significant digits quantity | C n..2 | **O** | | |
| 7383 | Surface or layer code | C an..3 | **N** | | |

Segment Notes:

This segment is used to specify the actual physical dimensions of the product being ordered where that product is sold in variable lengths or volumes.

Example:
MEA+PD+LN:4+MTR:4.6'
The precise length of the product identified by the GTIN 5412345111115 is 4.6 metres.

## 5. Segments Layout

Segment number: 66

| | | | | |
|---|---|---|---|---|
| **SG26** | - C | 200000 | - | LIN-PIA-IMD-MEA-QTY-ALI-DTM-MOA-GIN-QVR-FTX-SG30-SG31-SG32-SG35-SG36-SG37-SG41-SG47 |
| **SG32** | - C | 99 | - | PAC-MEA-QTY-SG34 |
| **QTY** | - C | 5 | - | Quantity |

Function:

A segment specifying the maximum quantity number of packages which can be stacked safely on each other and/or the number of items normally contained within the package.

| | | EDIFACT | GS1 | * | Description |
|---|---|---|---|---|---|
| C186 | QUANTITY DETAILS | M | **M** | | |
| 6063 | Quantity type code qualifier | M an..3 | **M** | * | 52 = Quantity per pack |
| 6060 | Quantity | M an..35 | **M** | | |
| 6411 | Measurement unit code | C an..3 | **D** | | This DE is only used if the product ordered is a variable quantity product.<br>KGM = kilogram |

Segment Notes:

This segment is used to specify the total quantity per pack.

Example:
QTY+52:48:KGM'

## 5. Segments Layout

Segment number: 67

| | | | |
|---|---|---|---|
| **SG26** | - C | 200000 - | LIN-PIA-IMD-MEA-QTY-ALI-DTM-MOA-GIN-QVR-FTX-SG30-SG31-SG32-SG35-SG36-SG37-SG41-SG47 |
| **SG32** | - C | 99 - | PAC-MEA-QTY-SG34 |
| **SG34** | - C | 99 - | PCI-RFF-DTM-GIN |
| **PCI** | - M | 1 - | Package identification |

Function:

A segment specifying markings and labels used on individual physical units (packages) described in the PAC segment.

| | | EDIFACT | GS1 | * | Description |
|---|---|---|---|---|---|
| 4233 | Marking instructions code | C an..3 | **A** | | 6 = Mark packages dimensions<br>7 = Mark net weight<br>8 = Mark gross weight<br>10 = Mark batch number<br>14 = Mark expiry date<br>16 = Buyer's instructions<br>17 = Supplier's instructions |
| C210 | MARKS & LABELS | C | **D** | | Composite C210 identifies specific marks or labels which the buyer wishes to have attached to the packaging. |
| 7102 | Shipping marks description | M an..35 | **M** | | |
| 7102 | Shipping marks description | C an..35 | **O** | | |
| 7102 | Shipping marks description | C an..35 | **O** | | |
| 7102 | Shipping marks description | C an..35 | **O** | | |
| 7102 | Shipping marks description | C an..35 | **O** | | |
| 7102 | Shipping marks description | C an..35 | **O** | | |
| 7102 | Shipping marks description | C an..35 | **O** | | |
| 7102 | Shipping marks description | C an..35 | **O** | | |
| 7102 | Shipping marks description | C an..35 | **O** | | |
| 7102 | Shipping marks description | C an..35 | **O** | | |
| 8275 | Container or package contents indicator code | C an..3 | **N** | | |
| C827 | TYPE OF MARKING | C | **N** | | |
| 7511 | Marking type code | M an..3 | | | |
| 1131 | Code list identification code | C an..17 | | | |
| 3055 | Code list responsible agency code | C an..3 | | | |

Segment Notes:

This segment is used to detail markings and labels on the packaging for the current line item.

Example:
PCI+14'

## 5. Segments Layout

Segment number: 68

| | | | | |
|---|---|---|---|---|
| **SG26** | - C | 200000 | - | LIN-PIA-IMD-MEA-QTY-ALI-DTM-MOA-GIN-QVR-FTX-SG30-SG31-SG32-SG35-SG36-SG37-SG41-SG47 |
| **SG32** | - C | 99 | - | PAC-MEA-QTY-SG34 |
| **SG34** | - C | 99 | - | PCI-RFF-DTM-GIN |
| **RFF** | - C | 1 | - | Reference |

Function:

A segment identifying the master label number.

| | | EDIFACT | GS1 | * | Description |
|---|---|---|---|---|---|
| C506 | REFERENCE | M | **M** | | |
| 1153 | Reference code qualifier | M an..3 | **M** | | CT = Contract number<br>IP = Import licence number<br>ON = Order number (buyer)<br>VN = Order number (supplier) |
| 1154 | Reference identifier | C an..70 | **R** | | |
| 1156 | Document line identifier | C an..6 | **N** | | |
| 4000 | Reference version identifier | C an..35 | **N** | | |
| 1060 | Revision identifier | C an..6 | **N** | | |

Segment Notes:

This segment is used to provide references associated with the PCI segment.

Example:
RFF+CT:32455'

## 5. Segments Layout

Segment number: 69

| | | | | |
|---|---|---|---|---|
| **SG26** | - C | 200000 | - | LIN-PIA-IMD-MEA-QTY-ALI-DTM-MOA-GIN-QVR-FTX-SG30-SG31-SG32-SG35-SG36-SG37-SG41-SG47 |
| **SG32** | - C | 99 | - | PAC-MEA-QTY-SG34 |
| **SG34** | - C | 99 | - | PCI-RFF-DTM-GIN |
| **DTM** | - C | 5 | - | Date/time/period |

Function:

A segment specifying the dates relevant to the package markings.

| | | EDIFACT | GS1 | * | Description |
|---|---|---|---|---|---|
| C507 | DATE/TIME/PERIOD | M | **M** | | |
| 2005 | Date or time or period function code qualifier | M an..3 | **M** | * | 171 = Reference date/time |
| 2380 | Date or time or period value | C an..35 | **R** | | |
| 2379 | Date or time or period format code | C an..3 | **R** | | 102 = CCYYMMDD<br>203 = CCYYMMDDHHMM |

Segment Notes:

This segment is used to specify dates and times associated with the preceding RFF segment.

Example:
DTM+171:20020801:102'

## 5. Segments Layout

Segment number: 70

| | | | | |
|---|---|---|---|---|
| **SG26** | - C | 200000 | - | LIN-PIA-IMD-MEA-QTY-ALI-DTM-MOA-GIN-QVR-FTX-SG30-SG31-SG32-SG35-SG36-SG37-SG41-SG47 |
| **SG32** | - C | 99 | - | PAC-MEA-QTY-SG34 |
| **SG34** | - C | 99 | - | PCI-RFF-DTM-GIN |
| **GIN** | - C | 99 | - | Goods identity number |

Function:

A segment identifying the number or ranges of numbers for use with the package markings.

| | | EDIFACT | GS1 | * | Description |
|---|---|---|---|---|---|
| 7405 | Object identification code qualifier | M an..3 | **M** | * | BJ = Serial shipping container code<br>BN = Serial number<br>BX = Batch number<br>SRV = GS1 Global Trade Item Number (GS1 Temporary Code) |
| C208 | IDENTITY NUMBER RANGE | M | **M** | | |
| 7402 | Object identifier | M an..35 | **M** | | |
| 7402 | Object identifier | C an..35 | **O** | | |
| C208 | IDENTITY NUMBER RANGE | C | **O** | | |
| 7402 | Object identifier | M an..35 | **M** | | |
| 7402 | Object identifier | C an..35 | **O** | | |
| C208 | IDENTITY NUMBER RANGE | C | **O** | | |
| 7402 | Object identifier | M an..35 | **M** | | |
| 7402 | Object identifier | C an..35 | **O** | | |
| C208 | IDENTITY NUMBER RANGE | C | **O** | | |
| 7402 | Object identifier | M an..35 | **M** | | |
| 7402 | Object identifier | C an..35 | **O** | | |
| C208 | IDENTITY NUMBER RANGE | C | **O** | | |
| 7402 | Object identifier | M an..35 | **M** | | |
| 7402 | Object identifier | C an..35 | **O** | | |

Segment Notes:

This segment is used to indicate numbers, which are to be marked on the packages for the current line item.

Example:
GIN+BJ+354123450000000014:354123450000000106'

## 5. Segments Layout

Segment number: 71

| | | | |
|---|---|---|---|
| **SG26** | - C | 200000 - | LIN-PIA-IMD-MEA-QTY-ALI-DTM-MOA-GIN-QVR-FTX-SG30-SG31-SG32-SG35-SG36-SG37-SG41-SG47 |
| **SG35** | - C | 9999 - | LOC-QTY-DTM |
| **LOC** | - M | 1 - | Place/location identification |

Function:

A segment indicating the location to which part of the consignment is to be delivered.

| | | EDIFACT | GS1 | * | Description |
|---|---|---|---|---|---|
| 3227 | Location function code qualifier | M an..3 | **M** | * | 7 = Place of delivery |
| C517 | LOCATION IDENTIFICATION | C | **A** | | |
| 3225 | Location name code | C an..25 | **A** | | GLN - Format n13 |
| 1131 | Code list identification code | C an..17 | **O** | | |
| 3055 | Code list responsible agency code | C an..3 | **D** | | 9 = GS1<br>DE 3055 must be used if DE 3225 is used and does not contain an UN/LOCODE. |
| 3224 | Location name | C an..256 | **O** | | |
| C519 | RELATED LOCATION ONE IDENTIFICATION | C | **O** | | |
| 3223 | First related location name code | C an..25 | **R** | | Specify ultimate delivery location, e.g. a specific point on a works site.<br>GLN - Global Location number - Format n13 |
| 1131 | Code list identification code | C an..17 | **O** | | |
| 3055 | Code list responsible agency code | C an..3 | **D** | | DE 3055 must be used if DE 3223 is used and does not contain an UN/LOCODE.<br>9 = GS1 |
| 3222 | First related location name | C an..70 | **O** | | |
| C553 | RELATED LOCATION TWO IDENTIFICATION | C | **O** | | |
| 3233 | Second related location name code | C an..25 | **R** | | Used to further detail the delivery location.<br>GLN - Global Location number - Format n13 |
| 1131 | Code list identification code | C an..17 | **O** | | |
| 3055 | Code list responsible agency code | C an..3 | **D** | | DE 3055 must be used if DE 3233 is used and does not contain an UN/LOCODE.<br>9 = GS1 |
| 3232 | Second related location name | C an..70 | **O** | | |
| 5479 | Relation code | C an..3 | **N** | | |

Segment Notes:

This segment is used to identify the location of delivery for a split delivery order.

Example:
LOC+7+4012345500004::9'

## 5. Segments Layout

Segment number: 72

| | | | | |
|---|---|---|---|---|
| **SG26** | - C | 200000 | - | LIN-PIA-IMD-MEA-QTY-ALI-DTM-MOA-GIN-QVR-FTX-SG30-SG31-SG32-SG35-SG36-SG37-SG41-SG47 |
| **SG35** | - C | 9999 | - | LOC-QTY-DTM |
| **QTY** | - C | 1 | - | Quantity |

Function:

A segment specifying the quantity to be delivered to the identified location.

| | | EDIFACT | GS1 | * | Description |
|---|---|---|---|---|---|
| C186 | QUANTITY DETAILS | M | **M** | | |
| 6063 | Quantity type code qualifier | M an..3 | **M** | * | 11 = Split quantity<br>83 = Backorder quantity |
| 6060 | Quantity | M an..35 | **M** | | |
| 6411 | Measurement unit code | C an..3 | **D** | | KGM = kilogram<br>This DE is only used if the product being responded to is a variable quantity product. |

Segment Notes:

This segment is used to indicate the delivery quantity for the delivery location specified in the previous LOC segment. The total of all quantities specified in segment group 35 for the line, must equal the value for the total quantity detailed in the QTY segment at line level.

Example:
QTY+11:14'

## 5. Segments Layout

Segment number: 73

| | | | |
|---|---|---|---|
| **SG26** | - C | 200000 - | LIN-PIA-IMD-MEA-QTY-ALI-DTM-MOA-GIN-QVR-FTX-SG30-SG31-SG32-SG35-SG36-SG37-SG41-SG47 |
| **SG35** | - C | 9999 - | LOC-QTY-DTM |
| **DTM** | - C | 5 - | Date/time/period |

Function:

A segment specifying the dates and/or times that the delivery should be made.

| | | EDIFACT | GS1 | * | Description |
|---|---|---|---|---|---|
| C507 | DATE/TIME/PERIOD | M | **M** | | |
| 2005 | Date or time or period function code qualifier | M an..3 | **M** | * | 2 = Delivery date/time, requested<br>11 = Despatch date and/or time<br>61 = Cancel if not delivered by this date<br>63 = Delivery date/time, latest<br>64 = Delivery date/time, earliest<br>69 = Delivery date/time, promised for<br>76 = Delivery date/time, scheduled for<br>X14 = Requested for delivery week commencing (GS1 Code)<br>200 = Pick-up/collection date/time of cargo |
| 2380 | Date or time or period value | C an..35 | **R** | | |
| 2379 | Date or time or period format code | C an..3 | **R** | | 102 = CCYYMMDD<br>203 = CCYYMMDDHHMM<br>718 = CCYYMMDD-CCYYMMDD |

Segment Notes:

This segment is used to indicate the date, time or period on which the split delivery will take place to the location identified in the LOC segment.

Example:
DTM+2:20020915:102'

## 5. Segments Layout

Segment number: 74

| | | | |
|---|---|---|---|
| **SG26** | - C | 200000 - | LIN-PIA-IMD-MEA-QTY-ALI-DTM-MOA-GIN-QVR-FTX-SG30-SG31-SG32-SG35-SG36-SG37-SG41-SG47 |
| **SG36** | - C | 10 - | TAX-MOA |
| **TAX** | - M | 1 - | Duty/tax/fee details |

Function:

A segment specifying a tax type, category and rate, or exemption, relating to the line item.

| | | EDIFACT | GS1 | * | Description |
|---|---|---|---|---|---|
| 5283 | Duty or tax or fee function code qualifier | M an..3 | **M** | | 5 = Customs duty<br>7 = Tax |
| C241 | DUTY/TAX/FEE TYPE | C | **D** | | |
| 5153 | Duty or tax or fee type name code | C an..3 | **O** | | GST = Goods and services tax<br>IMP = Import tax<br>VAT = Value added tax |
| 1131 | Code list identification code | C an..17 | **O** | | |
| 3055 | Code list responsible agency code | C an..3 | **D** | | |
| 5152 | Duty or tax or fee type name | C an..35 | **O** | | |
| C533 | DUTY/TAX/FEE ACCOUNT DETAIL | C | **O** | | |
| 5289 | Duty or tax or fee account code | M an..6 | **M** | | |
| 1131 | Code list identification code | C an..17 | **O** | | |
| 3055 | Code list responsible agency code | C an..3 | **D** | | |
| 5286 | Duty or tax or fee assessment basis value | C an..15 | **O** | | |
| C243 | DUTY/TAX/FEE DETAIL | C | **A** | | |
| 5279 | Duty or tax or fee rate code | C an..7 | **O** | | |
| 1131 | Code list identification code | C an..17 | **O** | | |
| 3055 | Code list responsible agency code | C an..3 | **D** | | |
| 5278 | Duty or tax or fee rate | C an..17 | **R** | | |
| 5273 | Duty or tax or fee rate basis code | C an..12 | **O** | | |
| 1131 | Code list identification code | C an..17 | **O** | | |
| 3055 | Code list responsible agency code | C an..3 | **D** | | |
| 5305 | Duty or tax or fee category code | C an..3 | **D** | | A = Mixed tax rate<br>E = Exempt from tax<br>S = Standard rate |
| 3446 | Party tax identifier | C an..20 | **O** | | |
| 1227 | Calculation sequence code | C an..3 | **N** | | |

Segment Notes:

This segment is used to identify the type and rate of tax that is applicable for the current line item. This segment is only used if the tax rate at line level differs from the rate specified in the header section.

Example:

## 5. Segments Layout

Segment number: 74

TAX+7+VAT+++:::17.5+S'

Dependency Notes:
DE C241 and 5305: Tax types and categories will differ from country to country. They are to be defined by national guidelines.

## 5. Segments Layout

Segment number: 75

| | | | | |
|---|---|---|---|---|
| **SG26** | - C | 200000 | - | LIN-PIA-IMD-MEA-QTY-ALI-DTM-MOA-GIN-QVR-FTX-SG30-SG31-SG32-SG35-SG36-SG37-SG41-SG47 |
| **SG36** | - C | 10 | - | TAX-MOA |
| **MOA** | - C | 1 | - | Monetary amount |

Function:

A segment specifying the amount for the identified tax/fee.

| | | EDIFACT | GS1 | * | Description |
|---|---|---|---|---|---|
| C516 | MONETARY AMOUNT | M | **M** | | |
| 5025 | Monetary amount type code qualifier | M an..3 | **M** | | 124 = Tax amount<br>125 = Taxable amount |
| 5004 | Monetary amount | C n..35 | **R** | | |
| 6345 | Currency identification code | C an..3 | **N** | | |
| 6343 | Currency type code qualifier | C an..3 | **N** | | |
| 4405 | Status description code | C an..3 | **N** | | |

Segment Notes:

This segment is used to indicate tax amounts related to the preceding TAX segment.

Example:
MOA+124:324.55'

## 5. Segments Layout

Segment number: 76

| | | | |
|---|---|---|---|
| **SG26** | - C | 200000 - | LIN-PIA-IMD-MEA-QTY-ALI-DTM-MOA-GIN-QVR-FTX-SG30-SG31-SG32-SG35-SG36-SG37-SG41-SG47 |
| **SG37** | - C | 999 - | NAD-SG40 |
| **NAD** | - M | 1 - | Name and address |

Function:

A segment identifying names and addresses of the parties, in coded or clear form, and their functions relevant to the order. It is recommended that where possible only the coded form of the party ID should be specified. e.g. The Buyer and Seller are known to each other, thus only the coded ID is required, but the Consignee or Delivery address may vary and would have to be clearly specified, preferably in structured format.

| | | EDIFACT | GS1 | * | Description |
|---|---|---|---|---|---|
| 3035 | Party function code qualifier | M an..3 | **M** | | UD = Ultimate customer |
| C082 | PARTY IDENTIFICATION DETAILS | C | **A** | | |
| 3039 | Party identifier | M an..35 | **M** | | For identification of parties it is recommended to use GLN - Format n13. |
| 1131 | Code list identification code | C an..17 | **O** | | |
| 3055 | Code list responsible agency code | C an..3 | **R** | * | 9 = GS1 |
| C058 | NAME AND ADDRESS | C | **O** | | This composite may only be used to fulfill the requirements of directive 2003/58/EC, article 4. |
| 3124 | Name and address description | M an..35 | **M** | | |
| 3124 | Name and address description | C an..35 | **O** | | |
| 3124 | Name and address description | C an..35 | **O** | | |
| 3124 | Name and address description | C an..35 | **O** | | |
| 3124 | Name and address description | C an..35 | **O** | | |
| C080 | PARTY NAME | C | **D** | | |
| 3036 | Party name | M an..35 | **M** | | |
| 3036 | Party name | C an..35 | **O** | | |
| 3036 | Party name | C an..35 | **O** | | |
| 3036 | Party name | C an..35 | **O** | | |
| 3036 | Party name | C an..35 | **O** | | |
| 3045 | Party name format code | C an..3 | **O** | | |
| C059 | STREET | C | **D** | | |
| 3042 | Street and number or post office box identifier | M an..35 | **M** | | |
| 3042 | Street and number or post office box identifier | C an..35 | **O** | | |
| 3042 | Street and number or post office box identifier | C an..35 | **O** | | |
| 3042 | Street and number or post office box identifier | C an..35 | **O** | | |
| 3164 | City name | C an..35 | **D** | | |
| C819 | COUNTRY SUB-ENTITY DETAILS | C | **D** | | |
| 3229 | Country sub-entity name code | C an..9 | **O** | | |

## 5. Segments Layout

Segment number: 76

| | | EDIFACT | GS1 | * | Description |
|---|---|---|---|---|---|
| 1131 | Code list identification code | C an..17 | **O** | | |
| 3055 | Code list responsible agency code | C an..3 | **O** | | |
| 3228 | Country sub-entity name | C an..70 | **O** | | County/State, clear text. |
| 3251 | Postal identification code | C an..17 | **D** | | |
| 3207 | Country name code | C an..3 | **D** | | ISO 3166 two alpha code |

Segment Notes:

This segment is used to specify the ultimate (end) customer for the current line item, i.e., the party sending the order will in turn sell the goods to, or the party on whose behalf the buyer is acting as an agent.

Example:
NAD+UD+5467895056010::9'

Dependency Notes:
The following composites and data elements are only used when a coded name and address can not be used.
The affected composites and data elements are as follows:
C080 - C059 - 3164 - C819 - 3251 - 3207

## 5. Segments Layout

Segment number: 77

| | | | | |
|---|---|---|---|---|
| **SG26** | - C | 200000 | - | LIN-PIA-IMD-MEA-QTY-ALI-DTM-MOA-GIN-QVR-FTX-SG30-SG31-SG32-SG35-SG36-SG37-SG41-SG47 |
| **SG37** | - C | 999 | - | NAD-SG40 |
| **SG40** | - C | 5 | - | CTA-COM |
| **CTA** | - M | 1 | - | Contact information |

Function:

A segment to identify a person or department, and their function, to whom communications should be directed.

| | | EDIFACT | GS1 | * | Description |
|---|---|---|---|---|---|
| 3139 | Contact function code | C an..3 | **R** | | IC = Information contact |
| C056 | DEPARTMENT OR EMPLOYEE DETAILS | C | **O** | | |
| 3413 | Department or employee name code | C an..17 | **O** | | |
| 3412 | Department or employee name | C an..35 | **O** | | |

Segment Notes:

This segment is used to provide contact and communications information for the ultimate customer identified in the NAD segment.

Example:
CTA+IC+:MARK CARTER'

## 5. Segments Layout

Segment number: 78

| | | | | |
|---|---|---|---|---|
| **SG26** | - C | 200000 | - | LIN-PIA-IMD-MEA-QTY-ALI-DTM-MOA-GIN-QVR-FTX-SG30-SG31-SG32-SG35-SG36-SG37-SG41-SG47 |
| **SG37** | - C | 999 | - | NAD-SG40 |
| **SG40** | - C | 5 | - | CTA-COM |
| **COM** | - C | 5 | - | Communication contact |

Function:

A segment to identify a communications type and number for the contact specified in the CTA segment.

| | | EDIFACT | GS1 | * | Description |
|---|---|---|---|---|---|
| C076 | COMMUNICATION CONTACT | M | **M** | | |
| 3148 | Communication address identifier | M an..512 | **M** | | |
| 3155 | Communication address code qualifier | M an..3 | **M** | | EM = Electronic mail<br>TE = Telephone<br>WWW = WWW-Site (GS1 Temporary Code) |

Segment Notes:

This segment is used to identify the communications number and the type of communications used for the person or department identified in the CTA segment.

Example:
COM+00448132445322:TE'

## 5. Segments Layout

Segment number: 79

| | | | | |
|---|---|---|---|---|
| **SG26** | - C | 200000 | - | LIN-PIA-IMD-MEA-QTY-ALI-DTM-MOA-GIN-QVR-FTX-SG30-SG31-SG32-SG35-SG36-SG37-SG41-SG47 |
| **SG41** | - C | 99 | - | ALC-ALI-DTM-SG42-SG43-SG44-SG45-SG46 |
| **ALC** | - M | 1 | - | Allowance or charge |

Function:

A segment identifying the charge or allowance and, where necessary its calculation sequence.

| | | EDIFACT | GS1 | * | Description |
|---|---|---|---|---|---|
| 5463 | Allowance or charge code qualifier | M an..3 | **M** | | A = Allowance<br>C = Charge<br>N = No allowance or charge |
| C552 | ALLOWANCE/CHARGE INFORMATION | C | **O** | | |
| 1230 | Allowance or charge identifier | C an..35 | **D** | | If code '69' is used in DE 5189, the agreement number must be specified in DE 1230. |
| 5189 | Allowance or charge identification code | C an..3 | **O** | | 69 = Charge for a customer specific finish |
| 4471 | Settlement means code | C an..3 | **O** | | 3 = Vendor check/cheque to customer<br>5 = Charge to be paid by vendor<br>6 = Charge to be paid by customer |
| 1227 | Calculation sequence code | C an..3 | **D** | | 1 = First step of calculation<br>2 = Second step of calculation<br>etc, etc, etc.....<br>9 = Ninth step of calculation<br>The calculation sequence indicator is used when multiple allowances and/or charges are applicable. If various allowances and/or charges percentages, quantities, monetary amount or rates are applicable to the same base price, then the calculation sequence indicator will always equal one. If the various allowances and/or charges are applied against a fluctuating price (constantly changing because of the application of other allowances and/or charges) then the sequence of calculation is indicated using this data element.<br>If the allowance or charge is not to be applied against a fixed price then the calculation sequence indicator must be included. |
| C214 | SPECIAL SERVICES IDENTIFICATION | C | **D** | | This composite is only included if the supplier knows the type of allowance or charge. |
| 7161 | Special service description code | C an..3 | **R** | | DDA = Dealer discount/allowance (GS1 Code)<br>TD = Trade discount<br>DDA - A discount is a reduction in price of an item offered on a one off basis. An important distinction to make between a discount and an allowance is that an allowance is a reduction which is offered on a regular basis.<br>X40 = Allowance/charge regulated by law (GS1 Code) |
| 1131 | Code list identification code | C an..17 | **O** | | |

## 5. Segments Layout

| | | | | | |
|---|---|---|---|---|---|
| 3055 | Code list responsible agency code | C an..3 | **D** | * | 9 = GS1<br>91 = Assigned by supplier or supplier's agent<br>92 = Assigned by buyer or buyer's agent<br>This data element is only used if GS1 Codes are used in data element 7161. |

## 5. Segments Layout

Segment number: 79

| | | EDIFACT | GS1 | * | Description |
|---|---|---|---|---|---|
| 7160 | Special service description | C an..35 | **O** | | |
| 7160 | Special service description | C an..35 | **O** | | |

Segment Notes:

This segment is used to specify any allowances or charges for the current line item.
As the calculation price type (data element 5152 PRI segment) used in the purchase order response is always as net price, allowances and/or charges specified in the ALC segment group are only for information purposes.

Example:
ALC+A+++1'

## 5. Segments Layout

Segment number: 80

| | | | | |
|---|---|---|---|---|
| **SG26** | - C | 200000 | - | LIN-PIA-IMD-MEA-QTY-ALI-DTM-MOA-GIN-QVR-FTX-SG30-SG31-SG32-SG35-SG36-SG37-SG41-SG47 |
| **SG41** | - C | 99 | - | ALC-ALI-DTM-SG42-SG43-SG44-SG45-SG46 |
| **ALI** | - C | 5 | - | Additional information |

Function:

A segment indicating that the allowance or charge specified is subject to special conditions owing to origin, customs preference or commercial factors.

| | | EDIFACT | GS1 | * | Description |
|---|---|---|---|---|---|
| 3239 | Country of origin name code | C an..3 | **O** | | Use ISO 3166 two alpha code. |
| 9213 | Duty regime type code | C an..3 | **O** | | |
| 4183 | Special condition code | C an..3 | **O** | | 6 = Subject to bonus<br>8 = Subject to discount |
| 4183 | Special condition code | C an..3 | **O** | | |
| 4183 | Special condition code | C an..3 | **O** | | |
| 4183 | Special condition code | C an..3 | **O** | | |
| 4183 | Special condition code | C an..3 | **O** | | |

Segment Notes:

This segment is used to indicate any special conditions related to the allowance and/or charge specified in the ALC segment.

Example:
ALI+++8'

## 5. Segments Layout

Segment number: 81

| | | | | |
|---|---|---|---|---|
| **SG26** | - C | 200000 | - | LIN-PIA-IMD-MEA-QTY-ALI-DTM-MOA-GIN-QVR-FTX-SG30-SG31-SG32-SG35-SG36-SG37-SG41-SG47 |
| **SG41** | - C | 99 | - | ALC-ALI-DTM-SG42-SG43-SG44-SG45-SG46 |
| **DTM** | - C | 5 | - | Date/time/period |

Function:

A segment to identify the date/time/period information related to the allowance or charge, e.g. period of validity.

| | | EDIFACT | GS1 | * | Description |
|---|---|---|---|---|---|
| C507 | DATE/TIME/PERIOD | M | **M** | | |
| 2005 | Date or time or period function code qualifier | M an..3 | **M** | * | 194 = Start date/time<br>206 = End date/time |
| 2380 | Date or time or period value | C an..35 | **R** | | |
| 2379 | Date or time or period format code | C an..3 | **R** | | 102 = CCYYMMDD<br>203 = CCYYMMDDHHMM<br>718 = CCYYMMDD-CCYYMMDD |

Segment Notes:

This segment is used to specify any dates which are related to the allowances and/or charges detailed in the ALC segment.

Example:
DTM+194:20021201:102'
DTM+206:20021224:102'
This example indicates that the allowances and/or charges are valid from the 1st of December 2002 to the 24th of December 2002.

## 5. Segments Layout

Segment number: 82

| | | | | |
|---|---|---|---|---|
| **SG26** | - C | 200000 | - | LIN-PIA-IMD-MEA-QTY-ALI-DTM-MOA-GIN-QVR-FTX-SG30-SG31-SG32-SG35-SG36-SG37-SG41-SG47 |
| **SG41** | - C | 99 | - | ALC-ALI-DTM-SG42-SG43-SG44-SG45-SG46 |
| **SG42** | - C | 1 | - | QTY-RNG |
| **QTY** | - M | 1 | - | Quantity |

Function:

A segment identifying the type of quantity and the quantity related to the allowance or charge.

| | | EDIFACT | GS1 | * | Description |
|---|---|---|---|---|---|
| C186 | QUANTITY DETAILS | M | **M** | | |
| 6063 | Quantity type code qualifier | M an..3 | **M** | | 1 = Discrete quantity |
| 6060 | Quantity | M an..35 | **M** | | |
| 6411 | Measurement unit code | C an..3 | **D** | | KGM = kilogram<br>This data element is only used if the current product is of variable quantity. |

Segment Notes:

This segment is used to specify quantity allowance/charge information.

Example:
QTY+1:35'

## 5. Segments Layout

Segment number: 83

| | | | | |
|---|---|---|---|---|
| **SG26** | - C | 200000 | - | LIN-PIA-IMD-MEA-QTY-ALI-DTM-MOA-GIN-QVR-FTX-SG30-SG31-SG32-SG35-SG36-SG37-SG41-SG47 |
| **SG41** | - C | 99 | - | ALC-ALI-DTM-SG42-SG43-SG44-SG45-SG46 |
| **SG42** | - C | 1 | - | QTY-RNG |
| **RNG** | - C | 1 | - | Range details |

Function:

A segment specifying, if required, the range to which the allowance or charge applies.

| | | EDIFACT | GS1 | * | Description |
|---|---|---|---|---|---|
| 6167 | Range type code qualifier | M an..3 | **M** | | 1 = Allowance range<br>2 = Charge range |
| C280 | RANGE | C | **R** | | |
| 6411 | Measurement unit code | M an..3 | **M** | | KGM = kilogram |
| 6162 | Range minimum value | C n..18 | **O** | | |
| 6152 | Range maximum value | C n..18 | **O** | | |

Segment Notes:

This segment is used to specify ranges, which apply to the previous QTY segment.

Example:
RNG+1+KGM:15:100'

## 5. Segments Layout

Segment number: 84

| | | | | |
|---|---|---|---|---|
| **SG26** | - C | 200000 | - | LIN-PIA-IMD-MEA-QTY-ALI-DTM-MOA-GIN-QVR-FTX-SG30-SG31-SG32-SG35-SG36-SG37-SG41-SG47 |
| **SG41** | - C | 99 | - | ALC-ALI-DTM-SG42-SG43-SG44-SG45-SG46 |
| **SG43** | - C | 1 | - | PCD-RNG |
| **PCD** | - M | 1 | - | Percentage details |

Function:

A segment identifying the percentage and the percentage basis for the calculation of the allowance or charge.

| | | EDIFACT | GS1 | * | Description |
|---|---|---|---|---|---|
| C501 | PERCENTAGE DETAILS | M | **M** | | |
| 5245 | Percentage type code qualifier | M an..3 | **M** | | 3 = Allowance or charge |
| 5482 | Percentage | C n..10 | **R** | | |
| 5249 | Percentage basis identification code | C an..3 | **O** | | |
| 1131 | Code list identification code | C an..17 | **O** | | |
| 3055 | Code list responsible agency code | C an..3 | **D** | | |
| 4405 | Status description code | C an..3 | **N** | | |

Segment Notes:

This segment is used to specify percentage allowance/charge information.

Example:
PCD+3:2.75'

## 5. Segments Layout

Segment number: 85

| | | | | |
|---|---|---|---|---|
| **SG26** | - C | 200000 | - | LIN-PIA-IMD-MEA-QTY-ALI-DTM-MOA-GIN-QVR-FTX-SG30-SG31-SG32-SG35-SG36-SG37-SG41-SG47 |
| **SG41** | - C | 99 | - | ALC-ALI-DTM-SG42-SG43-SG44-SG45-SG46 |
| **SG43** | - C | 1 | - | PCD-RNG |
| **RNG** | - C | 1 | - | Range details |

Function:

A segment specifying, if required, a range for the application of the percentage.

| | | EDIFACT | GS1 | * | Description |
|---|---|---|---|---|---|
| 6167 | Range type code qualifier | M an..3 | **M** | | 1 = Allowance range<br>2 = Charge range |
| C280 | RANGE | C | **R** | | |
| 6411 | Measurement unit code | M an..3 | **M** | | KGM = kilogram |
| 6162 | Range minimum value | C n..18 | **O** | | |
| 6152 | Range maximum value | C n..18 | **O** | | |

Segment Notes:

This segment is used to specify ranges, which apply to the previous PCD segment.

Example:
RNG+1+KGM:15000:25000'

## 5. Segments Layout

Segment number: 86

| | | | | |
|---|---|---|---|---|
| **SG26** | - C | 200000 | - | LIN-PIA-IMD-MEA-QTY-ALI-DTM-MOA-GIN-QVR-FTX-SG30-SG31-SG32-SG35-SG36-SG37-SG41-SG47 |
| **SG41** | - C | 99 | - | ALC-ALI-DTM-SG42-SG43-SG44-SG45-SG46 |
| **SG44** | - C | 2 | - | MOA-RNG |
| **MOA** | - M | 1 | - | Monetary amount |

Function:

A segment identifying the monetary amount for the allowance or charge.

| | | EDIFACT | GS1 | * | Description |
|---|---|---|---|---|---|
| C516 | MONETARY AMOUNT | M | **M** | | |
| 5025 | Monetary amount type code qualifier | M an..3 | **M** | | 23 = Charge amount<br>178 = Exact amount<br>204 = Allowance amount |
| 5004 | Monetary amount | C n..35 | **R** | | |
| 6345 | Currency identification code | C an..3 | **O** | | |
| 6343 | Currency type code qualifier | C an..3 | **O** | | |
| 4405 | Status description code | C an..3 | **O** | | |

Segment Notes:

This segment is used to specify monetary amount allowance/charge information.

Example:
MOA+23:5000'

## 5. Segments Layout

Segment number: 87

| | | | | |
|---|---|---|---|---|
| **SG26** | - C | 200000 | - | LIN-PIA-IMD-MEA-QTY-ALI-DTM-MOA-GIN-QVR-FTX-SG30-SG31-SG32-SG35-SG36-SG37-SG41-SG47 |
| **SG41** | - C | 99 | - | ALC-ALI-DTM-SG42-SG43-SG44-SG45-SG46 |
| **SG44** | - C | 2 | - | MOA-RNG |
| **RNG** | - C | 1 | - | Range details |

Function:

A segment specifying, if required, a range for the application of the allowance/charge amount.

| | | EDIFACT | GS1 | * | Description |
|---|---|---|---|---|---|
| 6167 | Range type code qualifier | M an..3 | **M** | | 3 = Monetary range |
| C280 | RANGE | C | **R** | | |
| 6411 | Measurement unit code | M an..3 | **M** | | KGM = kilogram |
| 6162 | Range minimum value | C n..18 | **O** | | |
| 6152 | Range maximum value | C n..18 | **O** | | |

Segment Notes:

This segment is used to specify ranges, which apply to the previous MOA segment.

Example:
RNG+3+KGM:15'

## 5. Segments Layout

Segment number: 88

| | | | | |
|---|---|---|---|---|
| **SG26** | - C | 200000 | - | LIN-PIA-IMD-MEA-QTY-ALI-DTM-MOA-GIN-QVR-FTX-SG30-SG31-SG32-SG35-SG36-SG37-SG41-SG47 |
| **SG41** | - C | 99 | - | ALC-ALI-DTM-SG42-SG43-SG44-SG45-SG46 |
| **SG45** | - C | 1 | - | RTE-RNG |
| **RTE** | - M | 1 | - | Rate details |

Function:

A segment specifying the rate per unit and the basis for calculation.

| | | EDIFACT | GS1 | * | Description |
|---|---|---|---|---|---|
| C128 | RATE DETAILS | M | **M** | | |
| 5419 | Rate type code qualifier | M an..3 | **M** | | 1 = Allowance rate<br>2 = Charge rate |
| 5420 | Unit price basis rate | M n..15 | **M** | | |
| 5284 | Unit price basis value | C n..9 | **A** | | |
| 6411 | Measurement unit code | C an..3 | **O** | | |
| 4405 | Status description code | C an..3 | **N** | | |

Segment Notes:

This segment is used to specify rate allowance/charge information.

Example:
RTE+1:14.75'

## 5. Segments Layout

Segment number: 89

| | | | | |
|---|---|---|---|---|
| **SG26** | - C | 200000 | - | LIN-PIA-IMD-MEA-QTY-ALI-DTM-MOA-GIN-QVR-FTX-SG30-SG31-SG32-SG35-SG36-SG37-SG41-SG47 |
| **SG41** | - C | 99 | - | ALC-ALI-DTM-SG42-SG43-SG44-SG45-SG46 |
| **SG45** | - C | 1 | - | RTE-RNG |
| **RNG** | - C | 1 | - | Range details |

Function:

A segment specifying, if required, the range for the application of the allowance/charge rate.

| | | EDIFACT | GS1 | * | Description |
|---|---|---|---|---|---|
| 6167 | Range type code qualifier | M an..3 | **M** | | 1 = Allowance range<br>2 = Charge range |
| C280 | RANGE | C | **R** | | |
| 6411 | Measurement unit code | M an..3 | **M** | | KGM = kilogram |
| 6162 | Range minimum value | C n..18 | **O** | | |
| 6152 | Range maximum value | C n..18 | **O** | | |

Segment Notes:

This segment is used to specify ranges which apply to the previous RTE segment.

Example:
RNG+1+KGM:400:1200'

## 5. Segments Layout

Segment number: 90

| | | | |
|---|---|---|---|
| **SG26** | - C | 200000 - | LIN-PIA-IMD-MEA-QTY-ALI-DTM-MOA-GIN-QVR-FTX-SG30-SG31-SG32-SG35-SG36-SG37-SG41-SG47 |
| **SG41** | - C | 99 - | ALC-ALI-DTM-SG42-SG43-SG44-SG45-SG46 |
| **SG46** | - C | 5 - | TAX-MOA |
| **TAX** | - M | 1 - | Duty/tax/fee details |

Function:

A segment specifying the tax type, category and rate, or exemption, related to the allowance or charge.

| | | EDIFACT | GS1 | * | Description |
|---|---|---|---|---|---|
| 5283 | Duty or tax or fee function code qualifier | M an..3 | **M** | | 5 = Customs duty<br>7 = Tax |
| C241 | DUTY/TAX/FEE TYPE | C | **D** | | |
| 5153 | Duty or tax or fee type name code | C an..3 | **O** | | GST = Goods and services tax<br>VAT = Value added tax |
| 1131 | Code list identification code | C an..17 | **O** | | |
| 3055 | Code list responsible agency code | C an..3 | **D** | | |
| 5152 | Duty or tax or fee type name | C an..35 | **O** | | |
| C533 | DUTY/TAX/FEE ACCOUNT DETAIL | C | **O** | | |
| 5289 | Duty or tax or fee account code | M an..6 | **M** | | |
| 1131 | Code list identification code | C an..17 | **O** | | |
| 3055 | Code list responsible agency code | C an..3 | **D** | | |
| 5286 | Duty or tax or fee assessment basis value | C an..15 | **O** | | |
| C243 | DUTY/TAX/FEE DETAIL | C | **A** | | |
| 5279 | Duty or tax or fee rate code | C an..7 | **O** | | |
| 1131 | Code list identification code | C an..17 | **O** | | |
| 3055 | Code list responsible agency code | C an..3 | **D** | | |
| 5278 | Duty or tax or fee rate | C an..17 | **R** | | |
| 5273 | Duty or tax or fee rate basis code | C an..12 | **O** | | |
| 1131 | Code list identification code | C an..17 | **O** | | |
| 3055 | Code list responsible agency code | C an..3 | **D** | | |
| 5305 | Duty or tax or fee category code | C an..3 | **D** | | A = Mixed tax rate<br>E = Exempt from tax<br>S = Standard rate |
| 3446 | Party tax identifier | C an..20 | **O** | | |
| 1227 | Calculation sequence code | C an..3 | **N** | | |

Segment Notes:

This segment is used to specify any taxes or duties, which related to the allowance or charge for the current line item.

## 5. Segments Layout

Segment number: 90

Example:
TAX+7+VAT+++:::17.5+S'

Dependency Notes:
DE C241 and 5305: Tax types and categories will differ from country to country. They are to be defined by national guidelines.

## 5. Segments Layout

Segment number: 91

| | | | | |
|---|---|---|---|---|
| **SG26** | - C | 200000 | - | LIN-PIA-IMD-MEA-QTY-ALI-DTM-MOA-GIN-QVR-FTX-SG30-SG31-SG32-SG35-SG36-SG37-SG41-SG47 |
| **SG41** | - C | 99 | - | ALC-ALI-DTM-SG42-SG43-SG44-SG45-SG46 |
| **SG46** | - C | 5 | - | TAX-MOA |
| **MOA** | - C | 1 | - | Monetary amount |

Function:

A segment specifying the tax amount for the allowance or charge.

| | | EDIFACT | GS1 | * | Description |
|---|---|---|---|---|---|
| C516 | MONETARY AMOUNT | M | **M** | | |
| 5025 | Monetary amount type code qualifier | M an..3 | **M** | | 124 = Tax amount<br>125 = Taxable amount |
| 5004 | Monetary amount | C n..35 | **R** | | |
| 6345 | Currency identification code | C an..3 | **N** | | |
| 6343 | Currency type code qualifier | C an..3 | **N** | | |
| 4405 | Status description code | C an..3 | **N** | | |

Segment Notes:

This segment is used to specify monetary amounts related to the previous TAX segment.

Example:
MOA+124:877.22'

## 5. Segments Layout

Segment number: 92

| | | | |
|---|---|---|---|
| **SG26** | - C | 200000 - | LIN-PIA-IMD-MEA-QTY-ALI-DTM-MOA-GIN-QVR-FTX-SG30-SG31-SG32-SG35-SG36-SG37-SG41-SG47 |
| **SG47** | - C | 10 - | TDT |
| **TDT** | - M | 1 - | Details of transport |

Function:

A segment specifying the mode, means and identification of the transport for the goods item being ordered, where this is different to or not specified within the heading section.

| | | EDIFACT | GS1 | * | Description |
|---|---|---|---|---|---|
| 8051 | Transport stage code qualifier | M an..3 | **M** | | 12 = At departure<br>13 = At destination<br>20 = Main-carriage transport |
| 8028 | Means of transport journey identifier | C an..17 | **O** | | Reference number covering the transport. |
| C220 | MODE OF TRANSPORT | C | **A** | | |
| 8067 | Transport mode name code | C an..3 | **R** | | 10 = Maritime transport<br>20 = Rail transport<br>30 = Road transport<br>40 = Air transport |
| 8066 | Transport mode name | C an..17 | **N** | | |
| C228 | TRANSPORT MEANS | C | **O** | | Die Datenelemente 8179 und 8178 werden nur dann benutzt, wenn der Transporttyp explizit identifiziert werden muß, d. h. wenn eine allgemeine Beschreibung, wie Straßentransport, nicht zutrifft. |
| 8179 | Transport means description code | C an..8 | **D** | | 23 = Rail bulk car<br>25 = Rail express<br>31 = Truck |
| 8178 | Transport means description | C an..17 | **D** | | |
| C040 | CARRIER | C | **O** | | |
| 3127 | Carrier identifier | C an..17 | **A** | | GLN - Global Location number - Format n13 |
| 1131 | Code list identification code | C an..17 | **O** | | |
| 3055 | Code list responsible agency code | C an..3 | **D** | | 9 = GS1 |
| 3128 | Carrier name | C an..35 | **O** | | |
| 8101 | Transit direction indicator code | C an..3 | **O** | | BS = Buyer to supplier<br>SB = Supplier to buyer |
| C401 | EXCESS TRANSPORTATION INFORMATION | C | **N** | | |
| 8457 | Excess transportation reason code | M an..3 | | | |
| 8459 | Excess transportation responsibility code | M an..3 | | | |
| 7130 | Customer shipment authorisation identifier | C an..17 | | | |
| C222 | TRANSPORT IDENTIFICATION | C | **O** | | |
| 8213 | Transport means identification name identifier | C an..9 | **O** | | |
| 1131 | Code list identification code | C an..17 | **O** | | |

## 5. Segments Layout

Segment number: 92

| | | EDIFACT | GS1 | * | Description |
|---|---|---|---|---|---|
| 3055 | Code list responsible agency code | C an..3 | **D** | | DE 3055 must be used if DE 8213 is used. |
| 8212 | Transport means identification name | C an..35 | **R** | | Vehicle license plate/Aircraft number. |
| 8453 | Transport means nationality code | C an..3 | **O** | | ISO 3166 two alpha code |
| 8281 | Transport means ownership indicator code | C an..3 | **N** | | |

Segment Notes:

This segment may be used to specify transport information for the current line item, such as requesting an express transport service. It overrides any transport details specified in the TDT segment at the heading level of the message.

Example:
TDT+20++30+31'

Dependency Notes:
Data Elements 8179 and 8178 are only used when the type of transport must be specifically identified, that is, a generic description such as road transport is unsuitable.

## 5. Segments Layout

Segment number: 93

| **UNS** - M 1 - Section control | | | | |
|---|---|---|---|---|
| Function:<br>A service segment placed at the start of the summary section to avoid segment collision. | | | | |
| | EDIFACT | GS1 | * | Description |
| 0081 Section identification | M a1 | **M** | * | S = Detail/summary section separation |
| Segment Notes:<br>This segment is used to separate the detail and summary sections of the message.<br><br>Example:<br>UNS+S' | | | | |

## 5. Segments Layout

Segment number: 94

| **MOA** - C 12 - Monetary amount | | | | | |
|---|---|---|---|---|---|
| Function:<br>A segment giving the total amounts for the whole order response message. | | | | | |
| | | EDIFACT | GS1 | * | Description |
| C516 | MONETARY AMOUNT | M | **M** | | |
| 5025 | Monetary amount type code qualifier | M an..3 | **M** | | 79 = Total line items amount<br>86 = Message total monetary amount<br>176 = Message total duty/tax/fee amount<br>259 = Total charges<br>260 = Total allowances |
| 5004 | Monetary amount | C n..35 | **R** | | |
| 6345 | Currency identification code | C an..3 | **N** | | |
| 6343 | Currency type code qualifier | C an..3 | **N** | | |
| 4405 | Status description code | C an..3 | **N** | | |

Segment Notes:

This segment is used to indicate total amounts for the purchase order response.

Example:
MOA+79:15000'
MOA+259:400'
MOA+260:1800'
Assuming that the currency of the order response is EURO sterling, the total value of the line items identified in the message is 15000 EURO with the total value of charges and allowances equalling 400 and 1800 EURO respectively.

## 5. Segments Layout

Segment number: 95

**CNT** - C 10 - Control total

Function:

A segment by which control totals may be provided by the sender for checking by the receiver.

| | | EDIFACT | GS1 | * | Description |
|---|---|---|---|---|---|
| C270 | CONTROL | M | **M** | | |
| 6069 | Control total type code qualifier | M an..3 | **M** | * | 1 = Total value of the quantity segments at line level in a message<br>2 = Number of line items in message<br>7 = Total gross weight<br>29 = Total net weight of consignment<br>When using code value '7= Total gross weight' in this data element the total specified in data element 6066 is arrived at by adding the values in data element 6314 of the MEA segment at LIN level when code value AAB is used in the same MEA segment.<br>When using code value '29 = Total net weight of consignment' in this data element the total specified in data element 6066 is arrived at by adding the values in data element 6314 of the MEA segment at LIN level when code value AAA is used in the same MEA segment. |
| 6066 | Control total value | M n..18 | **M** | | |
| 6411 | Measurement unit code | C an..3 | **O** | | |

Segment Notes:

This segment is used to provide message control totals.

Example:
CNT+2:157'

## 5. Segments Layout

Segment number: 96

| **UNT** - M 1 - Message trailer | | | | | |
|---|---|---|---|---|---|
| Function:<br>A service segment ending a message, giving the total number of segments in the message (including the UNH & UNT) and the control reference number of the message. | | | | | |
| | | EDIFACT | GS1 | * | Description |
| 0074 | Number of segments in the message | M n..6 | **M** | | The total number of segments in the message is detailed here. |
| 0062 | Message reference number | M an..14 | **M** | | The message reference numbered detailed here should equal the one specified in the UNH segment. |
| Segment Notes:<br>This segment is a mandatory UN/EDIFACT segment. It must always be the last segment in the message.<br><br>Example:<br>UNT+107+ME000001' | | | | | |

## 6. Examples

The following is an example of a simple Purchase Order Response, reference number ORSP12856, sent the 30th March 2002, responding to a Purchase Order of three line items placed the 25th March 2002. The Purchase Order has a reference number 652744. The buyer is identified by GLN 5412345000013 and the supplier is identified by GLN 4012345500004.

The Purchase Order Response is accepting without amendment the first line item and re-sends the line item for confirmation, is amending the second line item with a change in the PAC segment so all segments below LIN in the original order are re-transmitted, and is rejecting the third line item.

**Purchase Order Response message:**

| | |
|---|---|
| UNH+ME000001+ORDRSP:D:01B:UN:EAN009' | Message header |
| BGM+231+ORSP12856+4' | Order response number ORSP12856, accepted with proposals for change |
| DTM+137:20020330:102' | Message date is 30th of March 2002 |
| RFF+ON:652744' | Message is responding to order number 652744 |
| DTM+171:20020325:102' | Order date is 25th of March 2002 |
| NAD+BY+5412345000013::9' | Buyer is identified using GLN 5412345000013 |
| RFF+VA:452282' | Buyer's VAT number is 452282 |
| NAD+SU+4012345500004::9' | Supplier is identified using GLN 4012345500004 |
| RFF+VA:87765432' | Supplier's VAT number is 87765432 |
| LIN+1+5+3312345501102:SRV' | First product identified by GTIN 3312345501102 is accepted |
| LIN+2+3+3312345501003:SRV' | Second product identified by GTIN 3312345501003 is amended |
| PIA+1+ABC1234:SA' | Supplier's article number ABC1234 is provided as an additional identification |
| IMD+C++TU::9' | Product is a traded unit |
| QTY+21:48' | Ordered quantity is 48 |
| DTM+2:20020910:102' | Date of order is 10th of September 2002 |
| MOA+203:26400' | Value of ordered line is 26400 |
| PRI+AAA:550:CT:AAA' | Net calculation price is 550 |
| PAC+4+1+CS' | Product is packaged in a case |
| TAX+7+VAT+++:::17.5+S' | Product is subject to standard VAT rate of 17.5 % |
| MOA+124:4620' | Tax amount for product is 4620 |
| TDT+20++30++31' | Main carriage transport for the product is a truck |
| LIN+3+7+3312345501096:SRV' | Third product identified by GTIN 3312345501096 is not accepted |
| UNS+S' | Message detail/summary separator |

**6. Examples**

| | |
|---|---|
| CNT+2:3' | Count of the number of LIN segments in the message |
| UNT+25+ME000001' | Total number of segments in the message equals 25 |

Note:
The EDI interchange will include the UNB..UNZ segments and, if applicable, the UNG..UNE segments. (see Part I, section 5.7)