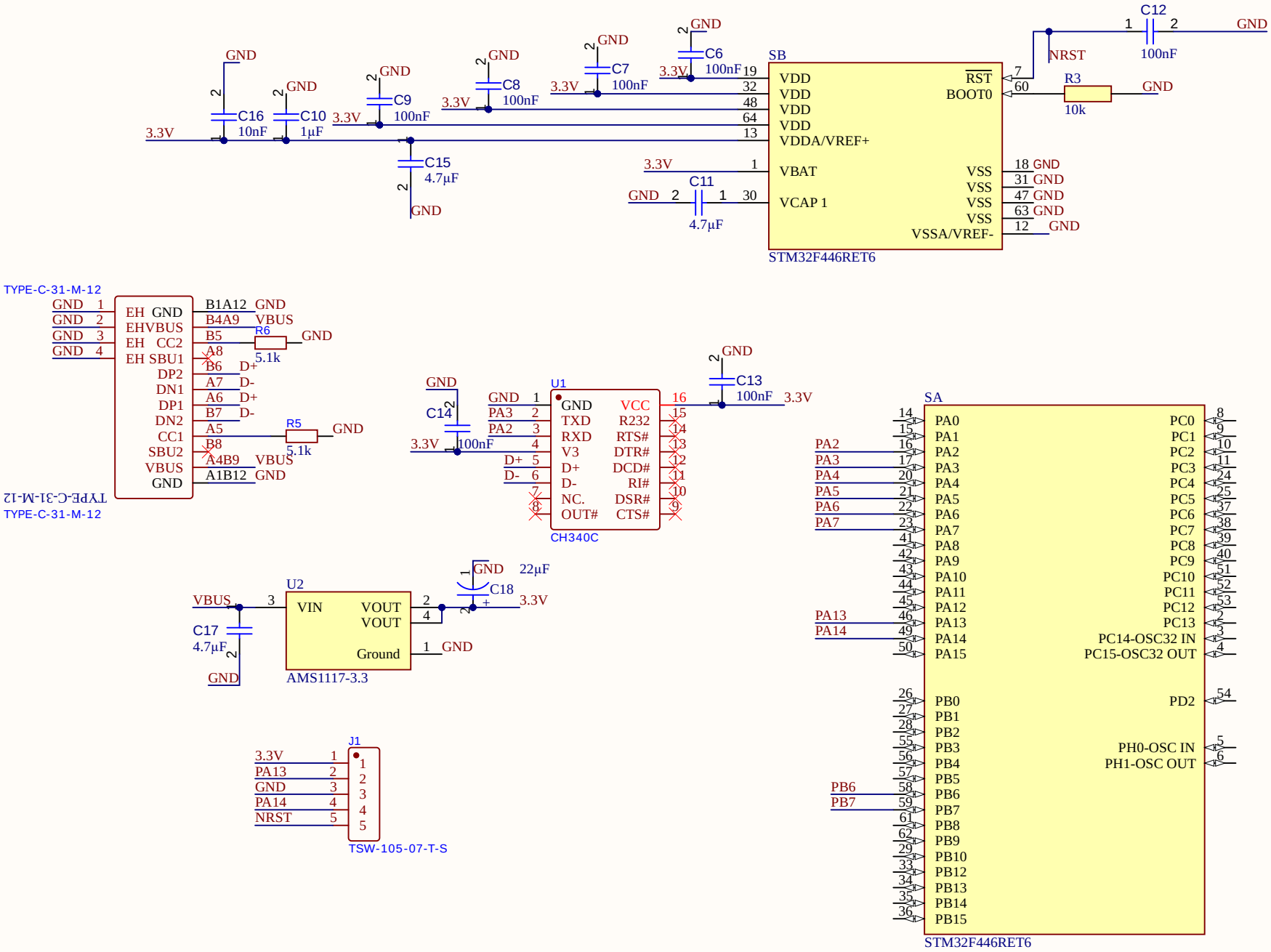

Title		
Size A	Number	Revision
Date: 7/20/2026		Sheet of
File: C:\Users\..\Support.SchDoc		Drawn By:

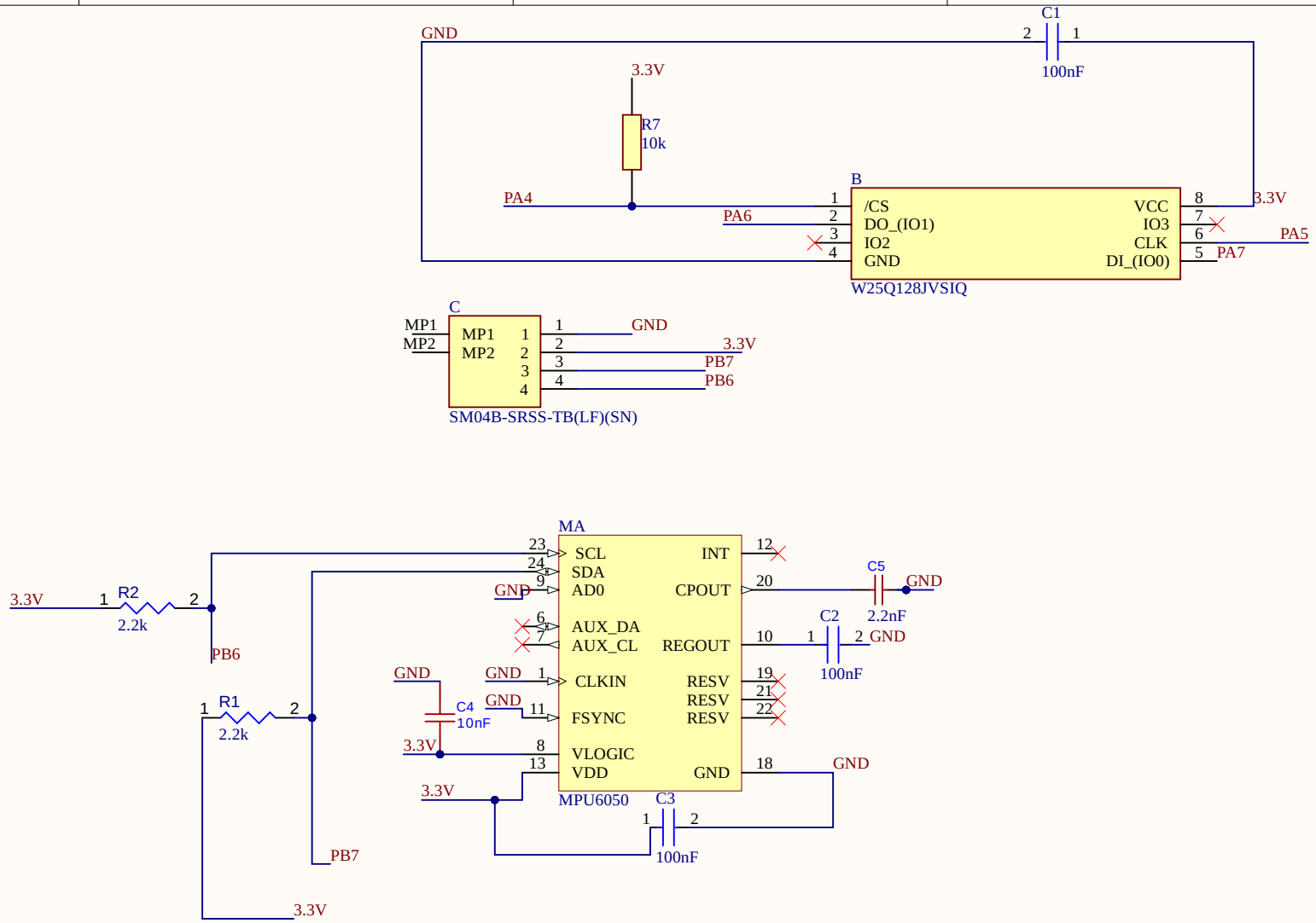

Title		
Size A	Number	Revision
Date: 7/20/2026		Sheet of
File: C:\Users\..\Periferals.SchDoc		Drawn By:

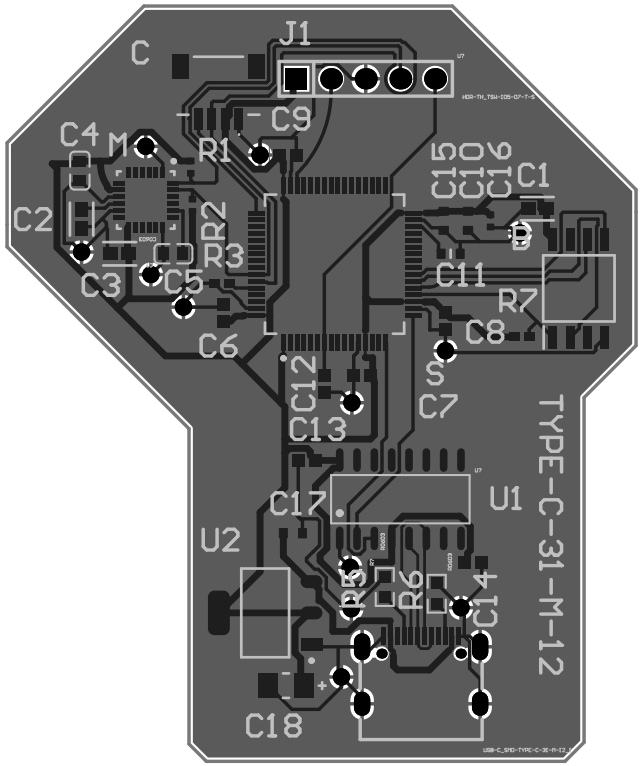
J1
C
C9
C4
M
R1
C15
C10
C16
C1
C2
R2
R3
C11
C3
C5
R7
C6
C8
C12
C7
C13
TYPE-C-31-M-12
C17
U1
U2
R5
R6
C14
C18