CONSTRUCTION NOTES
(FOR REFERENCE SEE ARCH DWGS)

1. GENERAL CONTRACTOR SHALL VERIFY ALL CONDITIONS AND DIMENSIONS AT JOB SITE. ALSO, REVIEW LEASE AGREEMENT WITH LANDLORD'S REQUIREMENTS OR CONDITIONS. IF ANY DISCREPANCIES ARE FOUND, CONTRACTOR SHALL NOTIFY THE ARCHITECT/PROJECT COORDINATOR.
2. ALL CONSTRUCTION WORK MUST CONFORM TO CURRENT LOCAL CODES AND AUTHORITIES FOR BUILDING AND HEALTH DEPARTMENTS.
3. GENERAL CONTRACTOR AGREES BY ACCEPTING CONTRACT AND STARTING WORK THAT HE SHALL ASSUME SOLE AND COMPLETE RESPONSIBILITY FOR JOB SITE CONDITIONS DURING THE COURSE OF CONSTRUCTION INCLUDING SAFETY OF ALL PERSONS AND PROPERTY. THIS REQUIREMENT SHALL APPLY CONTINUOUSLY AND NOT BE LIMITED TO NORMAL WORKING HOURS. CONTRACTOR SHALL DEFEND, INDEMNIFY AND HOLD THE OWNER, EBRS ARCHITECT, DESIGNER, ENGINEER AND LANDLORD HARMLESS FROM ANY AND ALL LIABILITY, REAL OR ALLEGED, IN CONNECTION WITH THE PERFORMANCE OF WORK ON THIS PROJECT. CONTRACTOR SHALL SHOW PROOF OF WORKER'S COMPENSATION INSURANCE AS REQUIRED PRIOR TO ISSUING A PERMIT.
4. ADDITIONAL ON SITE FIRE PROTECTION DURING CONSTRUCTION TO BE PROVIDED AS REQUIRED BY FIRE INSPECTOR OR DEPARTMENT. MAINTAIN EXISTING FIRE SPRINKLER SYSTEM IF APPLICABLE TO PROJECT.
5. ALL MATERIALS STORED ON THE SITE SHALL BE PROPERLY STACKED AND PROTECTED TO PREVENT DAMAGE AND DETERIORATION UNTIL USE. FAILURE TO PROTECT MATERIALS MAY BE CAUSE FOR REJECTION OF WORK.
6. GENERAL CONTRACTOR AND SUB-CONTRACTORS SHALL BE RESPONSIBLE FOR LOCATING, MAINTAINING, RELOCATING AND/OR REMOVING EXISTING UTILITIES.
7. GENERAL CONTRACTOR TO PROVIDE LARGER STUD WALL AS REQUIRED FOR INSTALLATION OF PLUMBING, ELECTRICAL, STRUCTURAL ITEMS, ETC.
8. EXISTING MATERIAL ON DEMISING OR INTERIOR PARTITION WALLS SHALL BE REMOVED BY SUB-CONTRACTORS TO ALLOW INSTALLATION OF NEW WORK, SUCH AS ELECTRICAL OUTLETS, PLUMBING LINES, ETC. ETC. AFTER WORK HAS BEEN COMPLETED, TESTED AND APPROVED, WALLS SHALL BE COVERED WITH 5/8" GYPSUM BOARD, FIRED TAPED AND PREPARED FOR NEW FINISHES. GENERAL CONTRACTOR SHALL BRACE ENTIRE STRUCTURE, STAIRS STOREFRONT UNTIL COMPLETE AND FUNCTIONING AS A FINISHED INSTALLATION AND UNIT.
9. ALL WORKMANSHIP AND MATERIAL ARE SUBJECT TO THE APPROVAL OF THE ARCHITECT/DESIGNER, OWNER AND LANDLORD.
10. GENERAL CONTRACTOR TO INSTALL (FIRE RETARDANT-TREATED IF REQ'D) 2X BLOCKING OR 1/2" PLYWOOD BACKING IN STUD WALLS FOR INSTALLATIONS OF EQUIPMENT, DECOR, ETC. AS REQUIRED. VERIFY ALL LOCATIONS WITH FOOD SERVICE CONTRACTOR AND DECOR CONTRACTOR. ALTHOUGH TYPICAL EQUIPMENT AND DECOR DETAILS WILL BE PROVIDED, IT WILL BE THE RESPONSIBILITY OF EACH SUBCONTRACTOR TO PROVIDE INTEGRAL, COMPLETE, FINAL INSTALLATION, WHICH MEETS LOCAL CODES, DESIGN CONCEPT. FOOD SERVICE CONTRACTOR TO PROVIDE BACKING PLAN.
11. PUBLIC AREAS, TOILET, AND PUBLIC CIRCULATION AREAS SHALL MEET HEIGHT REQUIREMENTS AS OUTLINED IN THE "STATE OF CALIFORNIA ARCHITECTURAL BARRIER LAWS" AND FEDERAL ADA. ALL REQUIRED TOILET ACCESSORIES, EQUIPMENT, FIXTURES SHALL MEET HEIGHT REQUIREMENTS. FLOOR PLAN WILL ALLOW DISABLED PERSON FULL ACCESS TO ALL FOOD SERVICE ACTIVITIES (KITCHEN, RESTROOMS, EXITS, DINING, ETC.). SEE ARCH DWGS.
12. AN NEW FIRE SPRINKLER SYSTEM IS TO BE INSTALLED, ENGINEER/SPRINKLER CONT. SHALL PREPARE A REVISED SPRINKLER HEAD LAYOUT AS PER THE NEW FLOOR PLAN. ENGINEER/CONTRACTOR SHALL SUBMIT DRAWING FOR BUILDING DEPARTMENT APPROVAL AND TAKE OUT NECESSARY PERMITS, INCREASE MAIN SIZE FOR NEW HEAD VOLUME. INSTALL DRY HEADS INSIDE EACH OF THE WALK-IN BOXES. WHERE POSSIBLE, RUN PIPING ABOVE CEILING AND PROVIDE ALL NECESSARY HEADS, TRIM PIECES, PIPING, FITTINGS, VALVES, CONNECTIONS, TESTING FITTINGS, DRAINS, ETC. FOR A COMPLETE SYSTEM. DEFERRED APPROVAL ITEM. INSTALLATION TO MEET NFPA. ALTER THE SPRINKLER SYSTEM AS NEEDED BY THE PROPOSED CEILING, STEPPED CEILINGS, LIGHT FIXTURES, ETC. SUBMIT SHOP DRAWINGS AND A PERMIT APPLICATION TO FIRE DEPARTMENT FOR APPROVAL BEFORE ALTERING THE SYSTEM.
13. REVISED OR NEW VENTILATION/HEATING DUCTS (MATERIALS, INSULATION, INSTALLATION) SHALL CONFORM TO SMACCNA MANUAL FOR LOW-PRESSURE DUCTS, 1997 OR LATEST. SEE MECH DWGS
14. MECHANICAL CONTRACTOR TO PROVIDE TOILET AND DRESSING ROOM EXHAUST FAN(S) AND DUCT WITH WIRING BY ELECTRICIAN. OPTIONAL ONE FAN WITH TIME CLOCK FOR ALL AREAS, OR INDIVIDUAL FANS WITH LIGHT SWITCH CONTROL. VENTILATION SHALL BE PROVIDED IN ALL SANITARY FACILITIES PER CODE. SEE ARCH/MECH DWGS.
15. EACH TRADE SHALL BE RESPONSIBLE FOR WALL OR ROOF PENETRATIONS TO THE OUTSIDE OF ITS OWN EQUIPMENT, VENTS, CONDUIT, ETC.; INCLUDING CUTTING FLASHING, CAULKING FOR A WATER TIGHT INSTALLATION.
16. OWNER SHALL PAY PLAN CHECK FEES AT BUILDING AND HEALTH DEPARTMENTS. THE GENERAL CONTRACTOR AND SUBS SHALL SECURE ALL NECESSARY PERMITS, INSPECTIONS AND APPROVAL FROM BUILDING DEPARTMENT FOR EACH SPECIFIC WORK UNLESS OTHERWISE NOTED.
17. VERIFY IF ASSEMBLY PERMIT IS REQUIRED CONTACT THE BUREAU OF FIRE PREVENTION FOR INFORMATION.
18. APPLIANCES DESIGNED TO BE FIXED IN POSITION SHALL BE SECURELY FASTENED IN PLACE. SUPPORTS FOR APPLIANCES SHALL BE DESIGNED AND CONSTRUCTED TO SUSTAIN VERTICAL AND HORIZONTAL LOADS WITHIN THE STRESS LIMITATIONS SPECIFIED IN THE CODE. SEE ARCH/STRUCTURAL DWGS.

VICINITY MAP

PROJECT LOCATION
400 HARTZ AVE
DANVILLE, CA 94526

N

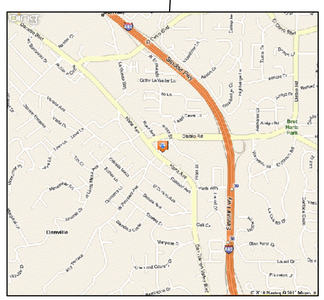

HEALTH NOTES

1. EQUIPMENT AND INSTALLATION SHALL MEET ALL REQUIREMENTS AS LISTED IN CALIFORNIA UNIFORM RETAIL FOOD FACILITIES CODE WHICH WILL BE IN EFFECT JULY 20 2007, 1985 FOR CALIFORNIA PROJECTS IN ADDITION TO LOCAL AND COUNTY CODES. INCLUDING AMENDED, SENATE BILL NO. 744
2. ALL FOOD SERVICE AND RELATED EQUIPMENT SHALL BE NATIONAL SANITATION FOUNDATION (NSF) APPROVED AND IN CONFORMITY WITH LOCAL HEALTH REGULATIONS. INSTALLATION OF EQUIPMENT SHALL MEET SAME REQUIREMENTS.
3. ALL ADJOINING EQUIPMENT AND COUNTERS SHALL BE SEALED TOGETHER TO PREVENT THE ENTRANCE OF MOISTURE. ALL EQUIPMENT, INCLUDING SHELVING, SHALL BE SMOOTHLY SEALED TO THE WALL TO PREVENT THE ENTRANCE OF SPLASH AND DEBRIS. ALL PORTABLE OR FREE STANDING UNITS SHALL BE REMOVABLE AND EASILY ACCESSIBLE FOR CLEANING. ALL CRACKS AND CREVICES AT JOINTS TO BE SEALED.
4. ALL WORKING SURFACES SHALL BE SMOOTH AND IMPERVIOUS.
5. ADEQUATE SNEEZE GUARD PROTECTION MUST BE PROVIDED WHERE UNWRAPPED FOOD IS DISPLAYED OR CUSTOMER'S SELF-SERVICE OF FOODS IS PROPOSED. SNEEZE GUARD MUST BE CONSTRUCTED OF APPROVED DESIGN. A PORTABLE SNEEZE GUARD MAY BE USED IF SIZE AND POSITIONING IS APPROVED BY HEALTH DEPARTMENT DURING CONSTRUCTION INSPECTION. FOR REFERENCE-NOT IN PROJECT.
6. ALL CUTTING BOARDS SHALL BE NSF APPROVED.
7. ALL REFRIGERATION EQUIPMENT AND EQUIPMENT FOR HOT STORAGE SHALL HAVE THERMOMETERS WHICH ARE EASILY READABLE, ARE IN PROPER WORKING CONDITION AND ARE ACCURATE WITHIN A RANGE OF PLUS OR MINUS TWO DEGREES. #1, 2
8. STORAGE SHELVING MUST BE SPECIFIED AS HAVING A SMOOTH, NON-ABSORBENT FINISH. THE LOWEST SHELF SHOULD BE 6" ABOVE THE FLOOR. #18
9. EXHAUST HOOD MUST MEET ALL MECHANICAL CODE REQUIREMENTS. CANOPY HOOD SHALL EXTEND 6" BEYOND ALL SIDES OF COOKING EQUIPMENT AS MEASURED FROM THE INSIDE EDGE OF THE GREASE TROUGH. ADEQUATE MECHANICAL MAKE-UP AIR IS PROVIDED AT FACE OF HOOD IN ORDER TO PRODUCE A BALANCED SYSTEM (MAKE-UP AIR SHALL EQUAL 95 TO 100% OF EXHAUSTED AIR). INTERWIRE EXHAUST/SUPPLY FANS. TYPE I HOODS #12 WITH EXHAUST FAN #13 AND MUA FAN #14
10. TOILET AND DRESSING ROOMS SHALL BE MECHANICALLY VENTILATED BY EXHAUST FAN(S) TO THE OUTSIDE PREMISES. THE EXHAUST FAN WITHIN EACH TOILET ROOM SHALL BE ACTIVATED BY A SWITCH, TO THE LIGHT FIXTURE LOCATED THEREIN AND CAPABLE OF 12 AIR CHANGES PER HOUR.
SEE ARCH/MECH DWGS.
11. ALL AREAS MUST HAVE SUFFICIENT VENTILATION TO FACILITATE PROPER FOOD STORAGE AND TO PROVIDE A REASONABLE CONDITION OF COMFORT FOR ANY EMPLOYEE, CONSISTENT WITH THE JOB PERFORMED BY THE EMPLOYEE. SEE MECH DWGS.
12. IF A HOT WATER (180 DEGREES F) SANITIZING RINSE DISHWASHING MACHINE IS INSTALLED, IT REQUIRES A TYPE II VAPOR HOOD WITH MECHANICAL EXHAUST VENTILATION. PROJECT HAS LOW TEMP UNDERCOUNTER DISHWASHER #33 AND 3 COMP WASH SINK #25/26.
13. ATMOSPHERIC VACUUM BREAKERS, APPROVED BACKFLOW PRESSURE PREVENTION DEVICES, ARE REQUIRED AT WATER SUPPLY LINES TO SINKS WITH THREADED SPIGOTS, DISHWASHER, GARBAGE DISPOSAL FLUSH LINES, STEAM EQUIPMENT, URINALS, BEVERAGE DISPENSERS, ICE MACHINES, LANDSCAPE IRRIGATION SYSTEM AND OTHER FIXTURES.
14. AT LEAST ONE SINK OR ONE SINK COMPARTMENT SHALL BE AVAILABLE FOR FOOD PREPARATION. FOOD PREPARATION SINKS SHALL HAVE AN INDIRECT SEWER CONNECTION, I.E.: FIXED IN-LINE AIRGAP OR DRAIN TO FLOOR SINK THROUGH APPROVED AIRGAP. #3/4.
15. A SEPARATE WALL-MOUNTED HAND WASH BASIN IS REQUIRED WITHIN, OR ADJACENT TO, THE FOOD PREPARATION AND PACKAGING AREA AND RESTROOMS. PROVIDE PERMANENTLY MOUNTED SINGLE SERVICE SOAP AND PAPER TOWEL DISPENSERS. #23/24
16. ALL SINKS TO BE PROVIDED WITH ADEQUATE HOT AND COLD WATER FROM MIXING FAUCETS INCLUDING RESTROOM SINKS. #3/4, 23, 25/26, M4
17. ALL PIPING TO BE INSTALLED WITHIN WALLS OR CABINET. IF CONDUITS, PLUMBING, ETC. ARE EXPOSED THEY MUST BE INSTALLED AT LEAST 6 INCHES OFF THE FLOOR AND 1 INCH AWAY FROM WALLS. ALL EXPOSED FLEX CONDUIT IS TO BE SEALTIGHT OR EQUIVALENT.
18. THE JUNCTURE AT THE FLOOR AND WALL MUST HAVE A COVED BASE WITH AT LEAST A 3/8 INCH RADIUS AND EXTENDING AT LEAST 6 INCHES UP THE WALL. STATIONARY FIXTURES OR BUILT-IN EQUIPMENT CAN BE SEALED ON A 4 INCH HIGH 3/8 INCH RADIUS CONCRETE CURB OR COVED-IN POSITION ON THE FLOOR. IF TOP SET COVING IS USED, IT MUST BE ADEQUATELY SEALED AT THE FLOOR WITH SILICONE SEALANT OR EQUIVALENT TO FORM WATERPROOF SEAL.
SEE ARCH. DWGS.
19. SPARE NO
20. FIFTY FOOT CANDLES OF LIGHT SHALL BE PROVIDED FOR ALL FOOD PREPARATION AREAS. MINIMUM OF TWENTY FOOT CANDLES OF LIGHT FOR CONSUMER SELF SERVICE OR WHERE FOODS ARE SOLD OR OFFERED FOR CONSUMPTION, INSIDE EQUIPMENT, 30" ABOVE FLOOR IN HANDWASHING, WAREWASHING, RESTROOMS. TEN FOOT CANDLES AT A DISTANCE OF 30" ABOVE FLOOR IN WALK-IN BOX, BARS AND DRY STORAGE. ADEQUATE LIGHTING SHALL BE USED OVER BAR SINKS AND AVAILABLE FOR CLEANUP OF GENERAL PREMISES. SEE ARCH DWGS.
21. LIGHT FIXTURES IN AREAS WHERE FOOD IS PREPARED OR WHERE OPEN FOOD IS STORED OR WHERE UTENSILS ARE CLEANED MUST HAVE SHATTERPROOF SHIELDS AND SHALL BE READILY CLEANABLE. SEE ARCH. DWGS.
22. PROVIDE AUTOMATIC DOOR CLOSURES ON ALL ENTRY, DELIVERY, RESTROOM AND CHANGE ROOM DOORS. GAPS UNDER EXTERIOR DOORS MAY NOT EXCEED MORE THAN 1/4". ANY EXTERIOR OPENABLE WINDOWS WILL BE SCREENED WITH NOT LESS THAN 16 MESH SCREENING. SEE ARCH DWGS.
23. APPROVED AIR CURTAINS MAY BE REQUIRED OVER ALL DELIVERY DOORS. THE AIR DEVICE SHALL BE SO INSTALLED THAT IT WILL AUTOMATICALLY OPERATE WHENEVER THE DOOR OPENS. #M1
24. BUILDING SHALL BE INSECT AND RODENT PROOF. EXTERIOR DOORS MUST BE SELF-CLOSING AND MUST COME WITHIN 1/4".OF FLOOR. ALL VENTS AND OTHER OPENINGS TO OUTSIDE NEED TO BE SEALED OR SCREENED, SIX (6)TEEN (16) MESH SCREENING IS REQUIRED ON ANY OPENABLE WINDOWS.
25. REFUSE CONTAINERS SHALL BE MOISTURE AND VERMIN PROOF WITH TIGHT FITTING LIDS. #6
26. ANY TRASH AND GARBAGE STORAGE AREA RECEIVING FOOD WASTE OR FOOD CONTAINERS, MUST HAVE A WATER BIB TO FACILITATE CLEANING. FLOOR, WALLS, AND CEILING MUST BE SMOOTH AND CLEANABLE; RECOMMEND HOT AND COLD WATER BIB BE AVAILABLE FOR CLEANING. WASTE WATER FROM SUCH CLEANING OPERATIONS MUST BE DISPOSED OF AS SEWAGE THROUGH A FLOOR DRAIN IN THE TRASH ENCLOSURE OR THE EQUIVALENT. SEE SITE PLAN-ARCHITECTURAL DRAWING(S).

HEALTH NOTES (CONTINUED)

27. PROVIDE A MOP AND BROOM RACK AND CLEANING SOLUTION STORAGE SHELVING AWAY FROM FOOD PREPARATION AND STORAGE AREAS. #M4/M5/M6.
28. IF AN EMPLOYEE GARMENT CHANGE AREA, SEPARATE FROM RESTROOM IS REQUIRED, CABINETS OR LOCKERS MUST BE INSTALLED IN THIS AREA OR EQ. #M8
29. EQUIPMENT SHALL MEET OR BE EQUIVALENT TO APPLICABLE NATIONAL SANITATION FOUNDATION (NSF) STANDARDS, OR IN THE ABSENCE OF APPLICABLE NSF STANDARDS, BE APPROVED BY THE ENFORCEMENT OFFICER. SUBMIT DOCUMENTATION OR WRITTEN VERIFICATION THAT ONLY APPROVED COMMERCIAL EQUIPMENT WILL BE USED (SUCH AS EQUIPMENT BROCHURES, MAKE AND MODEL, ETC.). MEET U.L. APPROVAL.
30. EQUIPMENT OR UTENSILS USED IN THE PREPARATION, SALE, SERVICE AND DISPLAY OF FOOD SHALL BE MADE OF NON-TOXIC, NON-CORROSIVE MATERIALS AND SHALL BE CONSTRUCTED, INSTALLED AND MAINTAINED TO BE EASILY CLEANED.
31. WALLS AND CEILINGS OF ALL ROOMS, EXCEPT BARS, WHERE FOOD IS STORED IN UNOPENED CONTAINERS, AND DINING AREAS SHALL BE DURABLE, SMOOTH, NON-ABSORBENT AND WASHABLE. WALLS AND CEILING OF FOOD PREPARATION AND UTENSIL WASHING AREAS AND INTERIOR SURFACES OF WALK-IN REFRIGERATION UNITS SHALL ALSO BE LIGHT COLORED WITH 70% LIGHT REFLECTANCE VALUE. SEE ARCH DWGS.
32. EACH METAL SINK COMPARTMENT MUST BE LARGE ENOUGH TO HOLD THE LARGEST UTENSILS WASHED IN THE SINK. EVERY UTENSIL SINK MUST HAVE TWO (2) METAL DRAINBOARDS. EACH METAL SINK DRAINBOARD MUST BE INTEGRAL WITH THE SINK AND SHOULD BE AT LEAST AS LONG AS ONE SINK COMPARTMENT. #25/26
33. OWNER TO PROVIDE THREE SIGNS: "NO SMOKING" IN KITCHEN; "WASH HANDS" AT HAND LAVATORY; "CHOKE CHART".
34. SLIP RESISTANT FLOORING THAT ARE ABRASIVE OR HAVE A RAISED TREAD PATTERN MUST BE RESTRICTED TO TRAFFIC AREAS ONLY AND MUST BE PROPERLY SLOPED TO FLOOR DRAINS. FLOORING UNDER EQUIPMENT AND AT THE BASE COVES MUST BE SMOOTH (FOR NEW FLOORS). SEE ARCH. DWGS.
35. IF FLOOR TILE GROUT IS USED, AN ACCEPTABLE GROUT, ADDITIVE MIXED WITH THE GROUT TO MAKE IT GREASE, OIL AND WATER RESISTANT SHALL BE USED (FOR NEW FLOOR AND REPAIR WORK). SEE ARCH. DWGS.
36. FLOOR MOUNTED EQUIPMENT MUST BE SUPPORTED BY SIX (6) INCHES MINIMUM APPROVED COMMERCIAL CASTERS, OR BE COMPLETELY SEALED IN POSITION ON A FOUR (4) INCHES MINIMUM HIGH CONTINOUSLY AND INTEGRAL COVED BASE OR COVED CONCRETE CURB TO FACILITATE EASE OF CLEANING.
37. WATER HEATER SHALL BE ON A FOUR (4) INCHES MINIMUM HIGH COVED CURB BASE, OR ON AT LEAST SIX (6) INCHES HIGH, SMOOTH, EASILY CLEANABLE APPROVED LEGS. #. IF ANY FIXTURE THAT REQUIRES HOT WATER IS MORE THAN SIXTY FEET AWAY FROM HOT WATER HEATER PLUMBER TO PROVIDE RECIRCULATING PUMP.
38. WALK-IN REFRIGERATION OR FREEZER UNITS MUST BE COMPLETELY FLASHED TO THE BUILDING'S WALLS AND CEILING. THE AREAS ABOVE WALK-INS MAY NOT BE USED FOR STORAGE. ANY OPENINGS FOR VENTILATION IN THE FLASHING ABOVE WALK-INS UNITS MUST BE SCREENED WITH AT LEAST 16 MESH SCREEN (ANY SCREENS OVER VENTILATION OPENINGS MUST BE KEPT CLEAN). FOR REFERENCE-NOT IN PROJECT.
39. APPLIANCES DESIGNED TO BE FIXED IN POSITION SHALL BE SECURELY FASTENED IN PLACE. SUPPORTS FOR APPLIANCES SHALL BE DESIGNED AND CONSTRUCTED TO SUSTAIN VERTICAL AND HORIZONTAL LOADS WITHIN THE STRESS LIMITATIONS SPECIFIED IN THE CBC. SEE ARCH/STRUCTURAL DWGS.

FIRE DEPARTMENT NOTES

1. GENERAL CONTRACTOR TO PROVIDE HAND FIRE EXTINGUISHER OF TYPE AND SIZE AS REQUIRED BY CODE AND LOCATE AS INDICATED ON DRAWING (FOR RESTAURANT USE). PROVIDE PROPER IDENTIFICATION SIGNS. INSTALL AT HEIGHT NOT TO EXCEED 5'0". EXACT NUMBER/LOCATION BY FIRE INSPECTOR. GC TO PROVIDE A K CLASS FIRE EXTINGUISHER WITHIN 30 FEET OF COOKING INVOLVING VEGETABLE OR ANIMAL OIL AND FATS (SUCH AS DEEP FAT FRYERS), AS MEASURED ALONG AN UNOBSTRUCTED PATH OF TRAVEL. ALL PORTIONS OF THE BUILDING SHALL BE WITHIN 75 FEET OF A FIRE EXTINGUISHER WITH A MINMUM SIZE 2-A:10-BC. #M3
2. EXIT DOORS (SEE ARCH DWGS) SHALL BE LEFT UNLOCKED DURING ALL BUSINESS HOURS AND SHALL BE OPENABLE FROM INSIDE WITHOUT USE OF A KEY OR SPECIAL KNOWLEDGE OR EFFORT. KEY LOCKING HARDWARE IF EQUIPPED WITH A DOUBLE-KEYED INDICATING CYLINDER LOCK WHICH CLEARLY INDICATES WHETHER IT IS "LOCKED" OR "UNLOCKED". MANUALLY OPERATED EDGE-OR SURFACE MOUNTED FLUSH BOLTS AND SURFACE BOLTS SHALL NOT BE USED ON EXIT DOORS. PANIC HARDWARE TO BE PROVIDE AS PER LOCAL CODE REQUIREMENTS. GENERAL CONTRACTOR TO PROVIDE A SIGNAGE OVER EACH EXIT DOOR, E.G. "THIS DOOR SHALL REMAIN OPEN DURING BUSINESS HOURS" OR "EXIT DOOR ONLY". ONLY REQUIRED FOR ASSEMBLY BLDGS.
3. PROVIDE EXIT SIGN ILLUMINATION PER CODE, PROVIDE APPROVED EXIT SIGNS INSTALLED AT ALL REQUIRED EXITS AND WHERE OTHERWISE NECESSARY IN ORDER TO INDICATE THE DIRECTION OF EGRESS. NO POINT SHALL BE MORE THAN 100 FEET FROM THE NEAREST VISIBLE SIGN. EXIT SIGNS SHALL BE INTERNALLY OR EXTERNALLY ILLUMINATED IN ACCORDANCE WITH THE BUILDING CODE. (1011.1) CBC.
PROVIDE EMERGENCY EGRESS ILLUMINATION AT A MINIMUM OF 1 FOOT-CANDLE AT FLOOR LEVEL THROUGHOUT ILLUMINATION SHALL INCLUDE THE MAIN FLOOR AREAS INCLUDING ALL PATHS OF EGRESS TO EXITS (1006.3) CBC
TESTING OF THE EMERGENCY EGRESS ILLUMINATION SHALL REQUIRE DISCONNECTING THE PRIMARY POWER TO THE FIXTURE(S). THIS MAY BE ACCOMPLISHED BY THE EMERGENCY CIRCUIT BREAKER OR MAIN ELECTRICAL DISCONNECT. PLAN ACCORDINGLY. SEE ARCH/ELEC DWGS.
4. GENERAL CONTRACTOR TO PROVIDE A OCCUPANCY SIGN WITH MAXIMUM PERSON AMOUNT AS DETERMINED BY FIRE/BUILDING DEPARTMENT AND MOUNT ON WALL IN A CONSPICUOUS LOCATION NEAR THE MAIN EXIT OR EXIT-ACRESS DOORWAY FROM THE ROOM (1004.4) CBC
5. KITCHEN DESIGN DOES INCLUDE AN EXHAUST HOOD SYSTEM, THE EXHAUST DUCT INSTALLATION SHALL CONFORM TO THE REQUIREMENTS OF CBC/CMC, AND LOCAL ORDINANCES. GENERAL CONTRACTOR TO PROVIDE ROOF OPENINGS FOR DUCTWORK. FSC TO PROVIDE AN AUTOMATIC FIRE EXTINGUISHING SYSTEM IN THE GREASE HOOD AND DUCT. FSC TO SUBMIT SHOP DRAWINGS AND A PERMIT APPLICATION TO THE FIRE DEPARTMENT FOR APPROVAL BY SRFPD PRIOR TO INSTALLATION. TYPE I #12 EXHAUST FAN #13 AND MUA FAN #14. HOOD FIRE SUPPRESSION SYSTEM #15 . KITCHEN SUPPRESSION SYSTEM SHALL COMPLY WITH NFPA 17-A AND UL300.
6. APPROVED NUMBERS OR ADDRESSES SHALL BE PLACED BY GC ON ALL NEW AND EXISTING BUILDINGS IN SUCH A POSITION AS TO BE PLAINLY VISIBLE AND LEGIBLE FROM THE STREET OR ROAD FRONTING THE PROPERTY. SAID NUMBERS SHALL CONTRAST WITH THEIR BACKGROUND. SEE ARCH DWGS.

GENERAL NOTES

BIDDING

1. ALL ITEMS AND INSTALLATIONS BY FOOD SERVICE CONTRACTOR, DECOR CONTRACTOR AND SIGN FABRICATOR ARE UNDER A SEPARATE CONTRACT AND NOT PART OF GENERAL CONTRUCTION BID. GENERAL CONTRACTOR AND SUBS ARE RESPONSIBLE FOR RELATED WORK AS OUTLINED IN THE DRAWINGS; E.G., PROVIDE POWER TO SPECIFIED LOCATION FOR SIGN, BUT SIGN CONTRACTOR SHALL FABRICATE ITEM AND INSTALL. FOOD SERVICE CONTRACTOR SHALL SET EQUIPMENT IN PLACE WHILE PLUMBER / ELECTRICIAN SHALL MAKE UTILITY CONNECTION.
2. EXTERIOR ILLUMINATED OR NON-ILLUMINATED SIGNS, AWNINGS, ETC. SHALL BE UNDER SEPARATE CONTRACTS AND PERMITS. APPLICATION FOR PERMITS SHALL BE FILED WITH LOCAL AUTHORITY PRIOR TO FABRICATION AND INSTALLATION.

SUBSTITUTIONS

1. WHEN A SPECIFIC REFERENCE TO AN ARTICLE, MANUFACTURER, PROPERTY, NAME, DEVICE, PRODUCT, MATERIAL OR FIXTURE IS MADE IN GENERAL CONSTRUCTION DOCUMENTS, IT IS TO ESTABLISH A STANDARD OF QUALITY AND SHALL NOT BE CONSTRUED AS LIMITING COMPETITION. IF THE CONTRACTOR, SUB-CONTRACTOR, SUPPLIER, MANUFACTURER'S REPRESENATIVE, ETC. INVOLVED WITH THE PROJECT DESIRES TO BID MATERIALS OTHER THAN THE SPECIFIED ITEMS, REQUEST FOR APPROVAL OF LIKE ITEMS SHALL BE MADE IN WRITING PROJECT COORDINATOR/OWNER NOT LATER THAN 5 CALENDER DAYS PRIOR TO SPECIFIED TIME FOR GENERAL CONSTRUCTION BID OPENING. MATERIALS ACCEPTABLE FOR SUBSTITUTION WILL BE APPROVED.
2. SUBMITTAL FOR APPROVAL OF MATERIALS OR PRODUCTS SHALL CONTAIN SUFFICIENT INFORMATION, DESCRIPTION BROCHURES, DRAWINGS, SAMPLES OR OTHER DATA AS NECESSARY OR REQUIRED TO DETERMINE WHETHER THE PROPOSED SUBSTITUTION IS EQUAL TO THE ITEM SPECIFIED. EACH SUBMITTAL SHALL BE WELL MARKED AND INDENTIFIED AS TO TYPE AND KIND OF ITEMS BEING MADE. EACH SUBMITTAL FOR APPROVAL OF LIKE ITEMS, MATERIALS OR PRODUCTS WILL BE COMPLETE WITH SUBSTANTIATING DATA. REFERENCE TO CATALOGS THAT DESIGN CONSTRUCTION COORDINATOR MAY OR MAY NOT HAVE, WILL NOT BE ACCEPTABLE.

CHANGE ORDERS

1. THE GENERAL CONTRACTOR SHALL NOT MAKE AN ADDITION, DELETION, OR REVISION TO THE CONTRACT DOCUMENTS WHICH WOULD AFFECT THE CONTRACT SUM OR CONTRACT TIME WITHOUT A WRITTEN CHANGE ORDER AUTHORIZED AND SIGNED BY THE OWNER.

HAZARDOUS MATERIALS NOTES

1. EBRS SHALL NOT BE HELD RESPONSIBLE FOR DETERMINING THE EXISTENCE OR REMOVAL OF HAZARDOUS OR ASBESTOS MATERIALS. THE OWNER SHALL BE RESPONSIBLE FOR THE COST OF REMOVING AND DISPOSING OF ANY HAZARDOUS OR ASBESTOS MATERIALS OF THE SITE OR CONTAINED WITHIN THE BUILDING. REMOVAL METHOD SHALL BE AS OUTLINED WITHIN THE STATE/LOCAL CODES, PERFORMED BY A STATE LICENSED CONTRACTOR AND DISPOSED OF AT AN ACCEPTABLE/LICENSED DUMP SITE. NON-REMOVAL OF MATERIAL AND RESULTING FINES OF CONSTRUCTION STOPPAGE SHALL BE THE OWNERS RESPONSIBILITY.
2. IF NECESSARY, THE WORK SHALL BE COORDINATED WITH COUNTY ENVIRONMENTAL HEALTH AND LOCAL QUALITY CONTROL MANAGEMENT DISTRICT.
3. DEMOLITION WORK SHALL BE FOR REMOVAL OF NON-BEARING WALLS (NO STRUCTURAL WORK REQUIRED) TO ALLOW INSTALLATION OF NEW UTILITY ITEMS IF REQUIRED.

ABBREVIATIONS

AFF	ABOVE FINISH FLOOR	FS	FLOOR SINK
D.C.	DECOR CONTRACTOR	FSC	FOOD SERVICE CONTRACTOR
E.C.	ELECTRICAL CONTRACTOR	GC.	GENERAL CONTRACTOR
EBRS.	EAST BAY RESTAURANT SUPPLY INC.	HD.	HUB DRAIN
EX.	EXISTING	MECH.	MECHANICAL CONTRACTOR
FD	FLOOR DRAIN	MFG	MANUFACTURER
FFD	FUNNEL FLOOR DRAIN	N.A.	NOT APPLICABLE
FOB	FACE OF BLOCK	NTS	NOT TO SCALE
FOC	FACE OF CONCRETE	PLBR.	PLUMBER
FOE	FACE OF EQUIPMENT BASE	RO	ROUGH OPENING
FOM	FACE OF MASONRY	SIP	SET IN PLACE
FOS	FACE OF STUD	TBS	TO BE SELECTED
FOW	FACE OF WALL		

CONSULTANTS

FOOD SERVICE:
EASTBAY RESTAURANT SUPPLY
8480 ENTERPRISE WAY
OAKLAND, CA 94621
TEL: (510) 627-0206
FAX: (510) 633-7939
CONTACT: JOE RUK
E-MAIL ADDRESS: joer@ebrs.net

ARCHITECT:
ARCHITECTURAL RESOURCES GROUP
PIER 9, THE EMBARCADERO
SAN FRANCISCO, CA 94111
TEL: (415) 421-1680
FAX: (415) 421-0127
CONTACT: PHILIP ROSSETTI
E-MAIL ADDRESS: philip@argsf.com

PROJECT DATA

1. PROJECT NAME: VETERANS COMMUNITY KITCHEN
2. PROJECT ADDRESS: 400 HARTZ AVE
DANVILLE, CA 94526
3. ZONING: SEE ARCHITECTURAL DRAWINGS
4. USE: SEE ARCHITECTURAL DRAWINGS
PROJECT: FOOD SERVICE
5. BUILDING TYPE: SEE ARCHITECTURAL DRAWINGS
TWO STOREY W/ BASEMENT
TYPE V W/ FIRE SPRINKLERS
6. CODES: 2007 CBC, CPC, CMC, CEC, CFC WITH CALIF. ENERGY CODE (TITLE 24)
CALIF BLDG CODE HANDICAP REQ'S (TITLE 24); ADA REGULATIONS
7. SQUARE FOOTAGE PROJECT: SEE ARCH DWGS FOR FULL BREAKDOWN
KITCHEN: 295 SQ FT
PROJECT TOTAL: 295 SQ FT
8. OCCUPANCY: B
PROJECT: SEE ARCH DWGS FOR FULL BREAKDOWN
KITCHEN: 295 SQ FT @200 = 2

PROJECT SCOPE

NEW COMMUNITY KITCHEN WITH FULL COOKING, WAREWASHING, FOOD PREPARATION AND STORAGE. SCOPE OF EBRS DRAWINGS TO SHOW FOOD SERVICE EQUIPMENT LAYOUT AND MECHANICAL POINTS OF CONNECTION. SEE ARCHITECTURAL DRAWINGS FOR MATERIAL/ROOM FINISH SCHEDULES, REFLECTED CEILING PLAN AND FIXTURE SCHEDULE, CONSTRUCTION DETAILS, DISABLED ACCESS DETAILS, TRASH ENCLOSURE.

SHEET INDEX

SHEET NUMBER	DESCRIPTION
FS1	GENERAL INFORMATION, NOTES
FS2	EQUIPMENT FLOOR PLAN AND SCHEDULE
FS3	PLUMBING PLAN, SCHEDULE, SYMBOLS AND DETAILS
FS4	ELECTRICAL PLAN, SCHEDULE, SYMBOLS AND DETAILS
FS5	PLUMBING AND ELECTRICAL NOTES
FS6	HOOD DATA, FIRE SUPPRESSION SYSTEM
FS7	BACKING PLAN AND DETAILS
H1	HOOD SHOP DRAWING
–	
–	

SYMBOLS

NORTH ARROW
INTERIOR WALL ELEVATION REFERENCE
COLUMN GRID LINE
CENTER LINE
DETAIL NO. / SHEET NO.
DOOR NO. / DOOR TYPE
EQUIPMENT ITEM NUMBER
LIGHT FIXTURE ITEM NUMBER
FINISH MATERI

EQUIPMENT SCHEDULE

FSC = FOOD SERVICE CONTRACTOR, PLUMB. = PLUMBER, VEND. = VENDOR, G.C. = GENERAL CONTRACTOR, S/S = STAINLESS STEEL, S/C = SELF CONTAINED, ELEC. = ELECTRICIAN, CUST FAB = CUSTOM FABRICATED, NSF = NATIONAL SANITATION FEDERATION

ITEM NO.	SUPP. BY	SET IN PLACE BY	QTY.	DESCRIPTION	MANUFACTURER	MODEL NO.
1	FSC	FSC	1	UPRIGHT 1 DR FREEZER, S/C., ON CASTERS	TRUE	T-23F
2	FSC	FSC	1	UPRIGHT 2 DR REFRIGERATOR, S/C., ON CASTERS	TRUE	T-49
3	FSC	FSC	1	S/S 2'-4 1/2" X 4'-5" 1-17" X 23" COMP. PREP. SINK, W/ 8" BACK SPLASH, W/ BASKET WASTE (SPLASH GUARD ON LEFT SIDE, SEE #7)	WESTSTAR OR EQ	1NSF1723-2D18
4	FSC	PLUMB	1	SPLASH MTD LEVER HANDLE FAUCET, W/ 8" SPOUT, SET ON #3	FISHER	61093
5	FSC	FSC	1	S/S WALL MTD 1'-0" X 7'-0" DOUBLE SHELF, SET ABOVE #3, 7	ADVANCE OR EQ	WS-12-84
6	FSC	FSC	2	MOBILE 32 GALLON CAPACITY TRASH RECEPTACLE, GRAY COLOR	RUBBERMAID	2632/2640
7	FSC	FSC	1	S/S 2'-6" X 4'-6" WORK TABLE, 5" REAR/RIGHT SPLASH W/ 12" SPLASH GUARD RIGHT END AT #3, S/S UNDER SHELF	ADVANCE OR EQ	KMS-304.5 CUST FAB
8	FSC	FSC	1	S/S WALL MTD 1'-0" X 4'-6" DOUBLE SHELF, SET ABOVE #10	ADVANCE OR EQ	WS-12-54
9	FSC	FSC	1	S/S 1'-6" X 2'-0" MICROWAVE OVEN SHELF, SET ABOVE #10	ADVANCE OR EQ	MS-18-24
10	FSC	FSC	1	S/S "L" SHAPED 2'-6" X 4'-6"/4'-6" WORK TABLE, 5" REAR SPLASH W/ 12" SPLASH GUARD LEFT END, S/S FULL UNDER SHELF	ADVANCE OR EQ	KMS-304.5-305.5 CUST FAB
11	FSC	FSC	1	MICROWAVE OVEN, 1000 WATTS, SET ON #9	AMANA	ALD10D
12	FSC	FSC	1	S/S TYPE I 3'-9"(+3" AIR) X 6'-0" CANOPY HOOD, W/ FILTERS/ LITES, EXHAUST ONLY, UL LISTED LOW VELOCITY, W/ S/S 1'-6" CEILING CLOSURE PANELS	CAPTIVEAIRE S/S MANUFR	4824 ND-2 CUST FAB
13	MECH	MECH	1	EXHAUST FAN AND DUCTWORK TO HOOD #12, GC TO PROVIDE 1 HR RATED SHAFT TO ROOF WITH ROOF OPENING	MECH SPEC KEF1 GREENHECK	CUBE-161XP-15
14	MECH	MECH	1	AIR SUPPLY FAN AND DUCTWORK FOR HOOD #12, W/ PERFORATED CEILING REGISTER, GC TO PROVIDE ROOF OPENING	MECH SPEC EC1 CHAMPION	3000DD
15	FSC	FSC	1	FIRE SUPPRESSION SYSTEM FOR HOOD #12, WET CHEMICAL, MEET UL LISTING 300, MTD AT RIGHT END OF HOOD	CAPTIVEAIRE ANSUL	R-102
16	FSC	FSC	1	S/S 6'-0" X 8'-0" HI. WALL LINING UNDER HOOD #12, TOPSET ON FLOOR BASE, SILICONE JOINT, NSF	S/S MANUFR	CUST FAB
17	FSC	FSC	1	60" RANGE W/ 6 O.B. 24" GRIDDLE, TWO REGULAR OVEN, W/ HI-SHELF, ON CASTERS, W/ QUICK DISCONN/ HOSE/ SEISMIC RESTRAINT, GAS	WOLF DORMONT	C60SS-6FT24 16100 KIT 36
18	FSC	FSC	4	S/S WIRE SHELVING, 5 TIERS, HIGH, 86" POSTS, SEE PLAN FOR SIZE, 50' OF 18" WIDE SHELVING (ADDITIONAL 2 STORAGE SHELVES IN BASEMENT ROOM #005, SEE ARCH. DWGS, 4 SHELVES = 100' OF 18" WIDE SHELVING)	METRO	SUPER ERECTA 1860NS/86PS
19	FSC	FSC	1	S/S 2'-6" X 7'-0" WORK TABLE, W/ NO SPLASH, S/S FULL UNDER SHELF, ON CASTERS	ADVANCE OR EQ	MS-307
20				SPARE NO		
21	FSC	FSC	1	S/S POST MTD 1'-0" X 7'-0" SINGLE SHELF, POST MTD ON #19	ADVANCE OR EQ	OTS-12-84R
22	FSC	FSC	1	MOBILE HEATED HOLDING/ TRANSPORT CART, 1 1/2" SPACING	METRO	C519-HFC-U
23	FSC	PLUMB	1	S/S WALL MTD HAND SINK W/ LEVER HANDLE FAUCET, S/S 10" SPLASH GUARD AT BOTH SIDES	ADVANCE	7-PS-66
24	FSC	FSC	1	SURFACE MTD SOAP AND TOWEL DISPENSER	SAN JAMAR CONTINENTAL	T1900XC V444 SS
25	FSC	FSC	1	S/S 2'-4 1/2" X 8'-7" 3-17" X 23" COMP. WASH SINK, W/ 8" SPLASH, BASKET WASTE W/ SPLASH GUARD AT RIGHT SIDE	WESTSTAR OR EQ	3NSF1723-2D24
26	FSC	PLUMB	1	SPLASH MTD LEVER HANDLE PRE-RINSE FAUCET, W/ ADD-ON 14" SPOUT, SET ON #25	FISHER	68136
27	FSC	FSC	1	S/S 19" X 22" SLANTED RACK SHELF, SET ABOVE #25	ADVANCE OR EQ	DT-6R-11
28	FSC	FSC	1	S/S WALL MTD 1'-6" X 3'-6" WIRE SHELVING, W/ S/S BRACKETS, SET ABOVE #25, FOR UTENSIL AIR DRYING	METRO	1842NS 1WD18S
29	FSC	FSC	1	S/S UNDER COUNTER LOW TEMP. DISHWASHER, W/ POWER CORD, SET UNDER #25 ON NSF SKID FEET/W/ FEXIBLE UTILITY CONNECTIONS TO ALLOW MOVEMENT FOR CLEANING	HOBART	LXIC
30				SPARE NO		
31	OWNER	OWNER	1	AIR POT COFFEE BREWER, SET ON #10	OWNER SPEC BUNN	CWTF15-APS
32	FSC	FSC	1	WALL MTD WATER FILTER FOR #33	SCOTSMAN	SSM1
33	FSC	FSC	1	ICE MACHINE CUBER, 150 LBS PRODUCTION W/ 80 LBS ICE STORAGE BIN, S/C AIR-COOLED	SCOTSMAN	CU1526SA-1A
–	–	–	1	–	–	–
–	–	–	1	–	–	–
–	–	–	1	–	–	–
M1	GC	GC	1	NON-HEATED AIR CURTAIN FAN ABOVE DELIVERY DOOR	MARS	36CH
M2	PLUMB	PLUMB	1	GREASE TRAP 35 GALLON,160LB CAPACITY MIN, SEE PLUMB DWG/SPEC	PLUMB SPEC TRAPZILLA	TZ-160
M3	GC	GC	1	WALL MTD. FIRE EXTINGUISHER (SIZE, TYPE, LOCATION PER LOCAL FIRE INSPECTOR)	ARCH SPEC GC SPEC	–
M4	PLUMB	PLUMB	2	2' X 2' FLOOR MOUNTED MOP SINK WITH FAUCET AND VACUUM BREAKER (NOT SHOWN JANITOR CLOSETS ON BASEMENT, 2ND FLOOR SEE ARCH DWGS)	FIAT AND CHICAGO FAUCETS PLUMB SPEC	TSBC 1610 540-LD897SGCCP
M5	GC	GC	2	18" MOP RACK SURFACE MTD. W/ #M4 (NOT SHOWN JANITOR CLOSETS ON BASEMENT, 2ND FLOOR SEE ARCH DWGS)	CONTINENTAL OR GC SPEC	516
M6	GC	GC	2	ENCLOSED STORAGE CABINET OR SHELVING FOR CLEANING AGENTS W/ #M4 (NOT SHOWN JANITOR CLOSETS ON BASEMENT, 2ND FLOOR SEE ARCH DWGS)	GC SPEC	–
M7	PLUMB	PLUMB	1	HOT WATER HEATER, 100 GALLON CAPACITY, ON 6" LEGS, GAS FIRED. PROVIDED WITH RECIRCULATING PUMP, SEE ARCH PLMB DGWS FOR LOCATION	PLUMB SPEC A.O.SMITH	BTN-180
M8	OWNER	OWNER	LOT	EMPLOYEE LOCKERS – 5 INDIVIDUAL BOXES PER SECTION, ON 6" LEGS OR WALL MOUNTED WITH 6" CLEARANCE (NOT SHOWN IN BASEMENT SEE ARCH DWGS)	KELMAX OR OWNER SPEC	–
M9	GC	GC	LOT	RESTROOM TOILET FIXTURES AND ACCESSORIES	ARCH SPEC PLUMB SPEC	–
–	–	–	1	–	–	–

NOTE:

1. THE LISTED DIMENSIONS FOR CUSTOM FABRICATED WALK-IN BOXES, S/S EQUIPMENT, CABINETS, ETC. ARE NOMINAL. EACH FABRICATOR IS TO FIELD VERIFY EQUIPMENT ITEM SIZE AND TO PROVIDE SHOP DRAWING(S) BASED ON FIELD DIMENSIONS FOR APPROVAL PRIOR TO FABRICATION OR DELIVERY.
2. EACH SUPPLIER AND/OR FABRICATOR SHALL VERIFY WITH GC THE DELIVERY AND ACCESS OF HIS SPECIFIC EQUIPMENT INTO THE SPACE. IF NECESSARY MAKE ARRANGEMENTS WITH GC, LANDLORD AND/OR OWNER FOR ACCESS E.G. REMOVAL OF DOOR(S), WINDOW(S) AND/OR WALL(s).
3. ALL NEW FAUCETS ARE LEAD FREE.

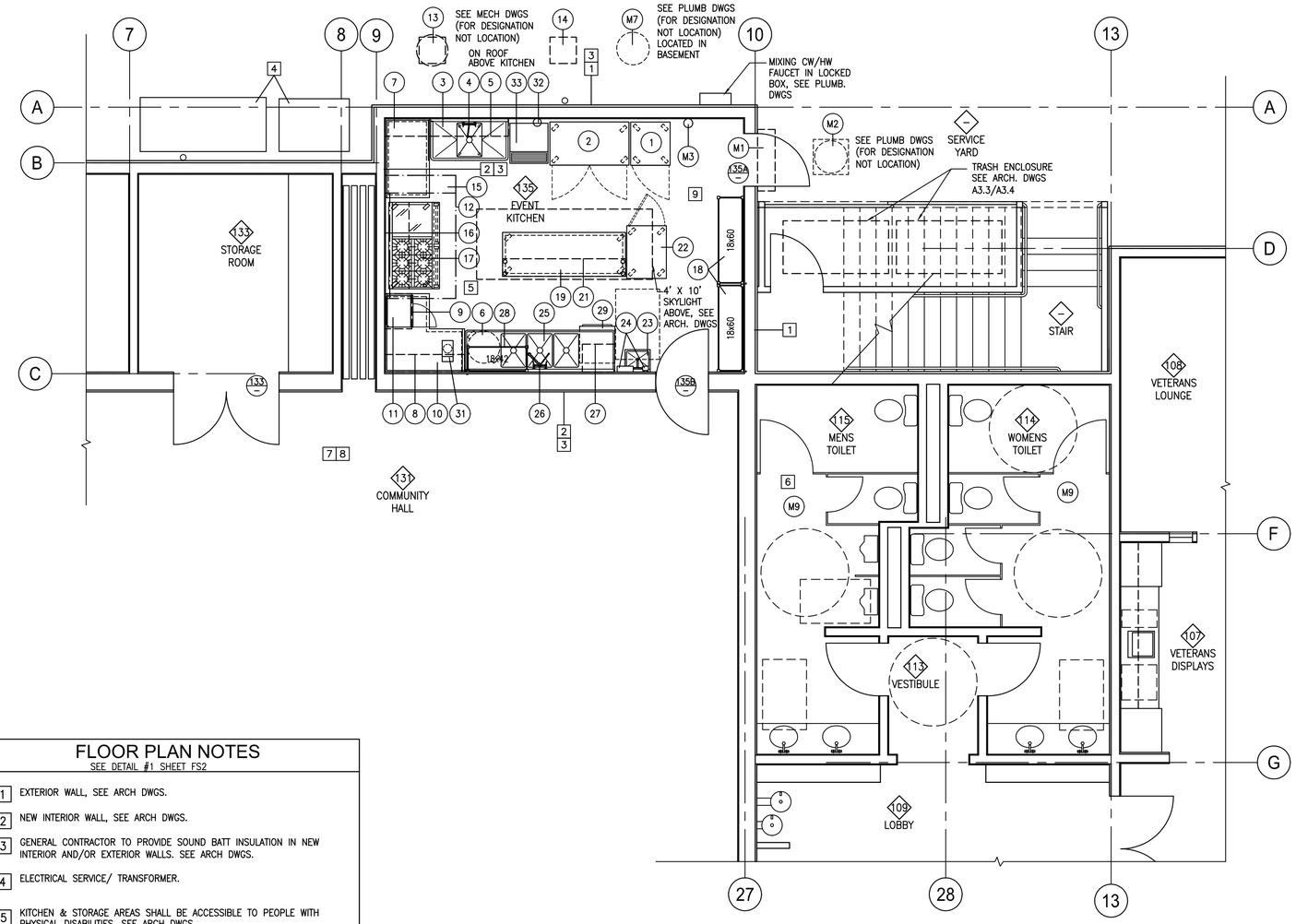

FLOOR PLAN NOTES

SEE DETAIL #1 SHEET FS2

1. EXTERIOR WALL, SEE ARCH DWGS.
2. NEW INTERIOR WALL, SEE ARCH DWGS.
3. GENERAL CONTRACTOR TO PROVIDE SOUND BATT INSULATION IN NEW INTERIOR AND/OR EXTERIOR WALLS. SEE ARCH DWGS.
4. ELECTRICAL SERVICE/ TRANSFORMER.
5. KITCHEN & STORAGE AREAS SHALL BE ACCESSIBLE TO PEOPLE WITH PHYSICAL DISABILITIES, SEE ARCH DWGS.
6. FOR RESTROOM DISABLED CLEARANCE AND/OR HEIGHTS FOR TOILET FIXTURES AND ACCESSORIES, SEE ARCH DWGS.
7. FREE STANDING TABLES & CHAIRS TO ALLOW DISABLED ACCESS, 1 H/C PER 20 AMBULATORY 27"H X 30"W X 19"D CLEAR. SEE ARCH DWGS.
8. TOP OF TABLES & WORK COUNTERS SHALL BE 28"-34" AFF SEE ARCH DWGS.
9. STORAGE RACKS & PERMANENT FLOOR CABINETS MORE THAN 6 FEET HIGH AND MOVABLE CASE, COUNTERS AND PARTITIONS 5 FEET 9 INCHES HIGH SHALL BE SEISMICALLY ANCHORED & BRACED AS PER CODE.

1 / FS2 EQUIPMENT FLOOR PLAN

1/4"=1'-0"

DESIGNERS AND SUPPLIERS OF EQUIPMENT AND INTERIORS FOR HOTELS, RESTAURANTS AND INSTITUTIONS

THIS DOCUMENT WITH THE IDEAS AND COMPUTER DATA INCORPORATED HEREIN, AS AN INSTRUMENT OF PROFESSIONAL SERVICE, IS THE PROPERTY OF EAST BAY RESTAURANT SUPPLY, INC. AND IS NOT TO BE USED OR COPIED IN WHOLE, OR IN PART FOR ANY MANNER WITHOUT THE EXPRESS WRITTEN AUTHORIZATION OF EAST BAY RESTAURANT SUPPLY, INC.

EAST BAY since 1934
RESTAURANT SUPPLY, INC.
Kitchen Design Consultants
49 FOURTH STREET OAKLAND, CA 94607 (510) 465-4300 FAX (510) 465-3201

CONTENT: EQUIPMENT PLAN
EQUIPMENT SCHEDULE

PROJECT: Veterans Community Kitchen

LOCATION: 400 Hartz Ave
Danville, CA 94526

DATE:

NO. REVISION

PROJECT COORDINATOR: LARRY LA GRAVE

DRAWN BY: TQ

CHECKED BY: JOE RUK

SCALE: 1/4" = 1'-0"

DATE: ISSUE FOR CONSTRUCTION JUNE/25/2010

JOB NO.: 5052

SHEET NO.: FS2

SHEET 174 OF 186

Plot Date: Jun 22, 10

PLUMBING SCHEDULE

ITEM NO.	DESCRIPTION	QTY.	BY	SUPPLY CW	SUPPLY HW	SUPPLY SOV	SUPPLY HT.	WASTE DIR.	WASTE INDIR	WASTE INSUL	WASTE HT.	WASTE VENT	GAS KBTU	GAS CONN.	GAS SOV	GAS HT.	REMARKS (WORK BY PLUMBER)
3	1 COMP. PREP. SINK	1	F	–	–	–	–	–	1 1/2"	–	–	–	–	–	–	–	–
4	SPLASH MTD FAUCET	1	F	1/2"	1/2"	X	12"	–	–	–	–	–	–	–	–	–	INSTALL FAUCET
14	AIR SUPPLY FAN	1	MECH	1/2"	–	X	ON ROOF	–	–	–	–	–	–	–	–	–	VERIFY IF REQ'D SEE MECH. DWGS. PROVIDE REDUCING FITTING/ TUBING TO INLET, W/ VACUUM BREAKER
15	FIRE SUPPRESSION SYSTEM	1	F	–	–	–	–	–	–	–	–	–	–	1"	X	VFY	INSTALL SUPPLIED SOV ON MAIN GAS LINE TO COOKING APPLIANCE #17, COORDINATE LOCATION
17	60" RANGE W/ 6 O.B. 24" GRIDDLE/ TWO REG. OVEN	1	F	–	–	–	–	–	–	–	–	–	290	1"	X	30"	INSTALL SUPPLIED QUICK DISCONN/ HOSE AND PRESSURE REG.
23	HAND SINK/ FAUCET	1	F	1/2"	1/2"	X	18"	1 1/2"	–	–	21"	1 1/2"	–	–	–	–	INSTALL SINK/ FAUCET
25	3 COMP. WASH SINK	1	F	–	–	–	–	–	2"	–	–	–	–	–	–	–	MANIFOLD WASTE TOGETHER
26	PRE-RINSE FAUCET	1	F	1/2"	1/2"	X	12"	–	–	–	–	–	–	–	–	–	INSTALL FAUCET
29	LOW TEMP. DISHWASHER	1	F	–	3/4"	X	18"	–	3/4"	–	–	–	–	–	–	–	PROVIDE FLEXIBLE LINES TO ALLOW MOVEMENT FOR CLEANING
31	COFFEE MACHINE	1	O	1/2"	–	X	48"	–	–	–	–	–	–	–	–	–	PROVIDE CHROME SOV W/REDUCING FITTING/ VACUUM BREAKER/TUBING TO INLET
32	FILTER	1	F	1/2"	–	X	48"	–	–	–	–	–	–	–	–	–	PROVIDE CHROME SOV W/REDUCING FITTING/ TUBING TO INLET #33, W/ VACUUM BRAEKER
33	ICE MACH/BIN	1	F	3/8"	–	–	–	–	3/4"	X	–	–	–	–	–	–	WATER FEED FROM #32
–	–	1	F	–	–	–	–	–	–	–	–	–	–	–	–	–	–
M2	GREASE TRAP	1	P	–	–	–	–	3"	–	–	–	–	–	–	–	–	SEE PLUMB DWGS
M4	MOP SINK	2	P	1/2"	1/2"	–	VFY	2"	–	–	VFY	2"	–	–	–	–	SEE PLUMB DWGS
M7	HOT WATER HEATER	1	P	1 1/2"	1 1/2"	–	–	–	1"	–	–	–	180	1/2"	X	VFY	SEE PLUMB DWGS
MP	RESTROOM TOILET FIXTURES	1	P	–	–	–	–	–	–	–	–	–	–	–	–	–	SEE PLUMB DWGS
–	–	1	F	–	–	–	–	–	–	–	–	–	–	–	–	–	–
P1	FLOOR SINK	3	P	–	–	–	–	2"	–	–	FLR STUB	2"	–	–	–	–	INSTALL FLUSH W/ FLOOR
P2	FLOOR DRAIN W/ TRAP PRIMER	1	P	1/2"	–	X	VFY	2"			FLR STUB	2"	–	–	–	–	INSTALL FLUSH W/ FLOOR

HOT WATER DEMAND

KITCHEN DEMAND PER HEALTH DEPT

HOT WATER CONSUMPTION	FIXTURE	GPH
	HAND/LAVATORY SINK – 1	5
	1 COMP PREP SINK – 1	5
	3 COMP WASH SINK – 1	66
	PRE-RINSE FAUCET UNIT – 1	45
	UNDERCTR DISHWASHER – 1	23
	TOTAL:	144

FOOD FACILITY WITH MULTISERVICE EATING UTENSILS, (MODERATE USE) = 90% GPH REQUIRED
144 TOTAL GPH X 90% = 130
130 GPH REQUIRED X 60 DEG RISE X 11 = 85,800 BTU MIN. INPUT OF WATER HEATER

6 / FS3 HOT WATER HEATER DATA

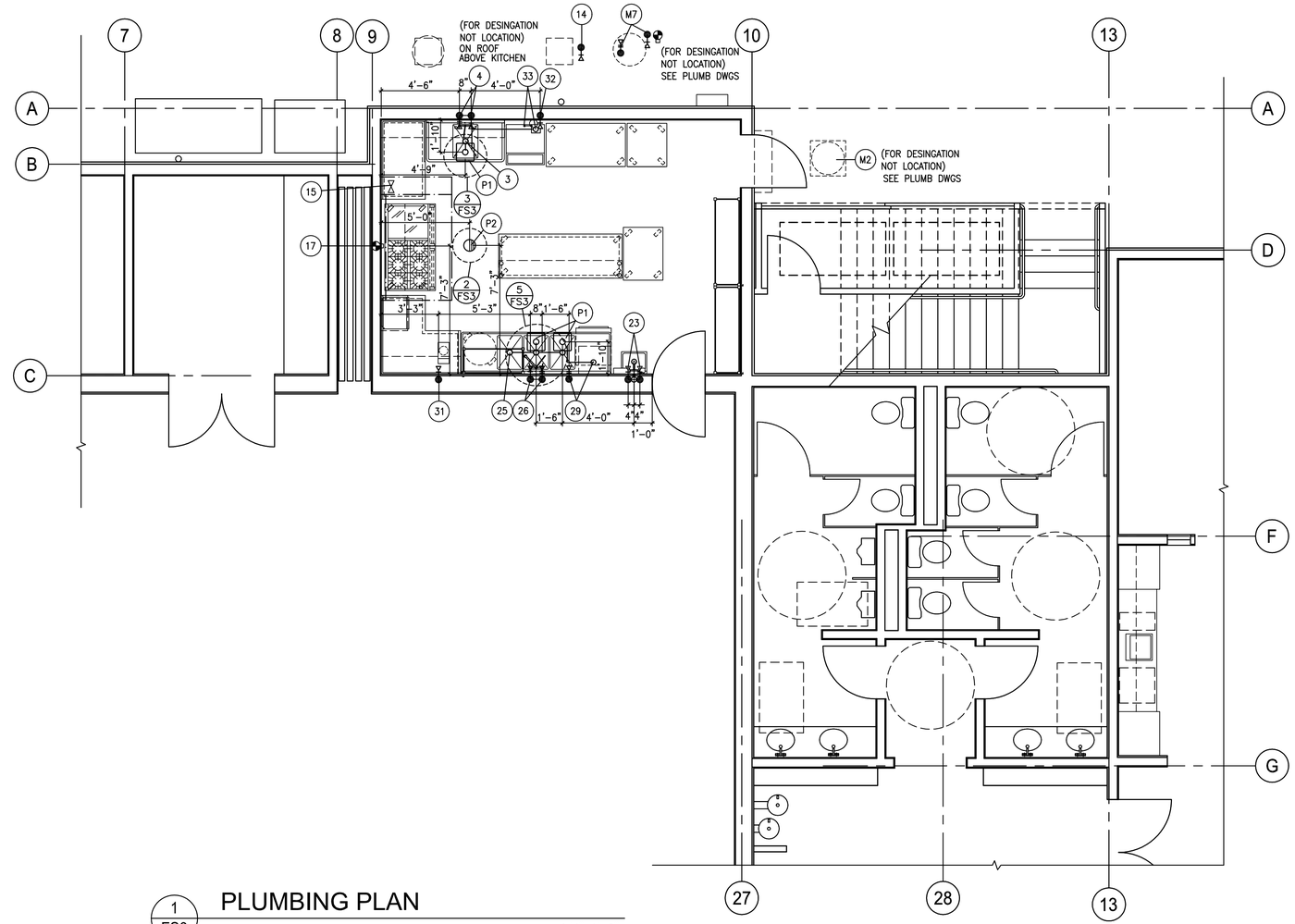

1 / FS3 PLUMBING PLAN

1/4"=1'-0"

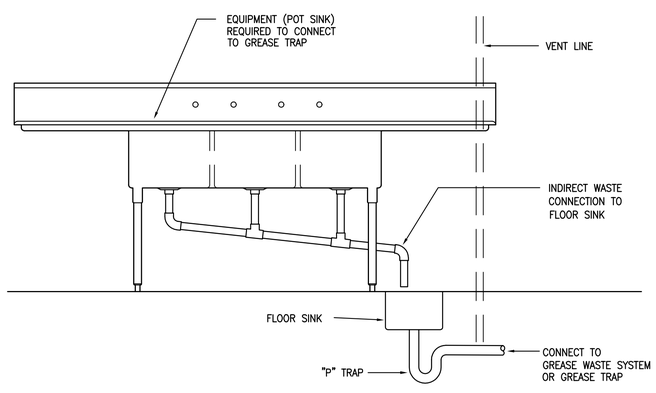

5 / FS3 TYP. DETAIL AT WASH SINK

3/4"=1'-0"

1. ALL FINAL FINISHES SHALL BE SMOOTH W/ NO TEXTURE, WITH LIGHT COLOR, AT ALL FOOD SERVICE AREAS.
2. FLOOR COVERING SHALL EXTEND UP THE WALL CONTINUOUSLY 6" WITH 3/8" RADIUS COVE.
3. ALL CONDUIT, PIPES AND WASTE LINES SHALL BE WITHIN THE WALL.
4. PROVIDE CHASES FOR CO2, SYRUP, LIQUOR, BEER, WINE, SODA, ETC. BY PLUMBER AND FOAM SEAL OPEN ENDS BY G.C.
5. VALVES MUST BE ACCESSIBLE. G.C. TO PROVIDE DRYWALL MTL. ACCESS PANELS.

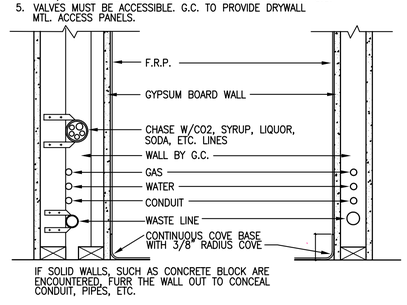

4 / FS3 TYP. UTILITH LINE THRU. WALL

1/4"=1'-0"

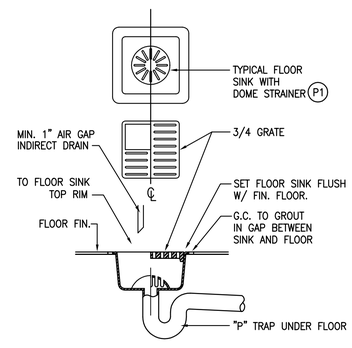

3 / FS3 TYP. FLOOR SINK DETAIL

3"=1'-0"

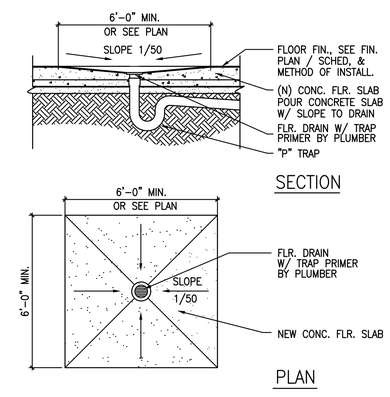

2 / FS3 TYP. FLOOR DRAIN DETAIL

1/2"=1'-0"

DESIGNERS AND SUPPLIERS OF EQUIPMENT AND INTERIORS FOR HOTELS, RESTAURANTS AND INSTITUTIONS

THIS DOCUMENT WITH THE IDEAS AND COMPUTER DATA INCORPORATED HEREIN, AS AN INSTRUMENT OF PROFESSIONAL SERVICE, IS THE PROPERTY OF EAST BAY RESTAURANT SUPPLY, INC. IT IS NOT TO BE USED OR COPIED IN WHOLE OR IN PART FOR ANY MANNER WITHOUT THE EXPRESS WRITTEN AUTHORIZATION OF EAST BAY RESTAURANT SUPPLY, INC.

EAST BAY since 1934
RESTAURANT SUPPLY, INC.
Kitchen Design Consultants
49 FOURTH STREET OAKLAND, CA. 94607 (510) 465-4300 FAX (510) 465-3201

CONTENT: PLUMBING PLAN/ SCHEDULE
PLUMBING SYMBOLS/ DETAILS

PROJECT: Veterans Community Kitchen

LOCATION: 400 Hartz Ave
Danville, CA 94526

DATE:
REVISION
NO.

PROJECT COORDINATOR: LARRY LA GRAVE
DRAWN BY: TQ
CHECKED BY: JOE RUK
SCALE: SEE DRAWING
DATE: ISSUE FOR CONSTRUCTION JUNE/25/2010
JOB NO.: 5052
SHEET NO.: FS3

Plot Date: Jun 22, 10

ELECTRICAL SCHEDULE

ALL OUTLETS HORIZONTALLY MTD. UNLESS OTHERWISE NOTED

ITEM NO.	DESCRIPTION	QTY.	VOLT.	PH	LOAD KW	LOAD AMP	LOAD HP	CONNECTION C/P	CONNECTION J BOX	CONNECTION DIS	HT.	REMARKS (WORK BY ELECTRICIAN)
1	UPRIGHT 1 DR FREEZER	1	120	1	–	7.2	1/3	X	–	–	88"	–
2	UPRIGHT 2 DR REFRIGERATOR	1	120	1	–	9.1	1/2	X	–	–	88"	–
11	MICROWAVE OVEN	1	120	1	1.0	–	–	X	–	–	66"	–
12	GREASE HOOD LITE	1	120	2	.1 EA	–	–	–	X	–	9'–0"	WIRE TO SWITCH CONTROL, PROVIDE A19–100W LAMP OR 60W CF LAMP
13	EXHAUST FAN	1	208	3	–	–	1 1/2	–	X	X	ON ROOF	INTERWIRE W/ #14, WIRE TO SWITCH CONTROL IN KITCHEN, VERIFY W/ MECH. DWGS
14	SUPPLY AIR FAN	1	120	1	–	7.2	1/3	–	X	X	ON ROOF	INTERWIRE W/ #13, WIRE TO SWITCH CONTROL IN KITCHEN, VERIFY W/ MECH. DWGS
22	HOLDING CART	1	120	1	2.0	16.7	–	X	–	–	VFY	USE #E1 UTILITY OUTLET
29	LOW TEMP. DISHWASHER	1	120	1	–	15.4	–	X	–	–	18"	UNIT W/ CORD/PLUG
31	COFFEE MACHINE	1	120	1	1.52	12.7	–	X	–	–	48"	OWNER SUPPLIED VERIFY POWER REQ'S
33	ICE MACHINE	1	120	1	–	10.0	–	X	–	–	48"	PROVIDE CORD/PLUG, 15 AMP CIRCUIT
M1	AIR CURTAIN FAN	1	120	1	–	–	1/2	–	X	–	VFY	PROVIDE MICRO SWITCH ON DOOR WHEN DOOR OPENS FAN IS ACTIVATED
M7	HOT WATER HEATER	1	120	1	–	VFY	–	–	X	–	VFY	VERIFY POWER REQ FOR PILOT LITE/DAMPER CONTROL SEE PLUMB DWGS
–	–	1	120	1	–	–	–	–	–	–	–	–
E1	CONVENIENCE OUTLET	SEE PLAN	120	1	–	5.0 EA	–	X	–	–	SEE PLAN	–
–	–	1	120	1	–	–	–	–	–	–	–	–

ELECTRICAL SYMBOLS

- DUPLEX CONVENIENCE OUTLET, 115V/1ø UNLESS OTHERWISE NOTED
- WP WEATHERPROOF DUPLEX CONVENIENCE OUTLET, 115V/1 5/8 UNLESS OTHERWISE NOTED
- QUADRUPLEX CONVENIENCE OUTLET, 115V/1ø UNLESS OTHERWISE NOTED
- SPECIAL CONVENIENCE OUTLET, 208V. 1ø OR 208V. 3ø
- FLOOR OUTLET
- J JUNCTION BOX
- TELEPHONE
- M METER
- POWER PANEL
- SINGLE POLE SWITCH
- $D DIMMER SWITCH
- $3 THREE WAY SWITCH
- FLUORESCENT LIGHT FIXTURE
- INCANDESCENT LIGHT FIXTURE
- VAPOR PROOF LIGHT FIXTURE
- DOWN LIGHT FIXTURE
- WALL WASHER LIGHT FIXTURE
- EXIT SIGN/LIGHT FIXTURE
- EMERGENCY LIGHTING FIXTURE
- D DATA CABLE BOX
- TV CABLE TV BOX
- T THERMOSTAT
- CEILING EXHAUST FAN
- SUPPLY DIFFUSER
- RETURN OR EXHAUST DIFFUSER

VOLT	VOLTAGE
PH	PHASE
KW	KILOWATT / EACH ITEM
AMP	AMPERE / EACH ITEM
HP	HORSE POWER / EACH ITEM
C/P	EQUIPMENT W/ CORD & PLUG PROVIDE RECEPTACLE
J BOX	PROVIDE JUNCTION BOX W/ SEALTIGHT FLEX CONDUIT TO EQUIPMENT CONNECTION
DIS	WITH DISCONNECT SWITCH
HT	HEIGHT (STUB OUT LOCATION)
GFI	GROUND FAULT INTERUPTER

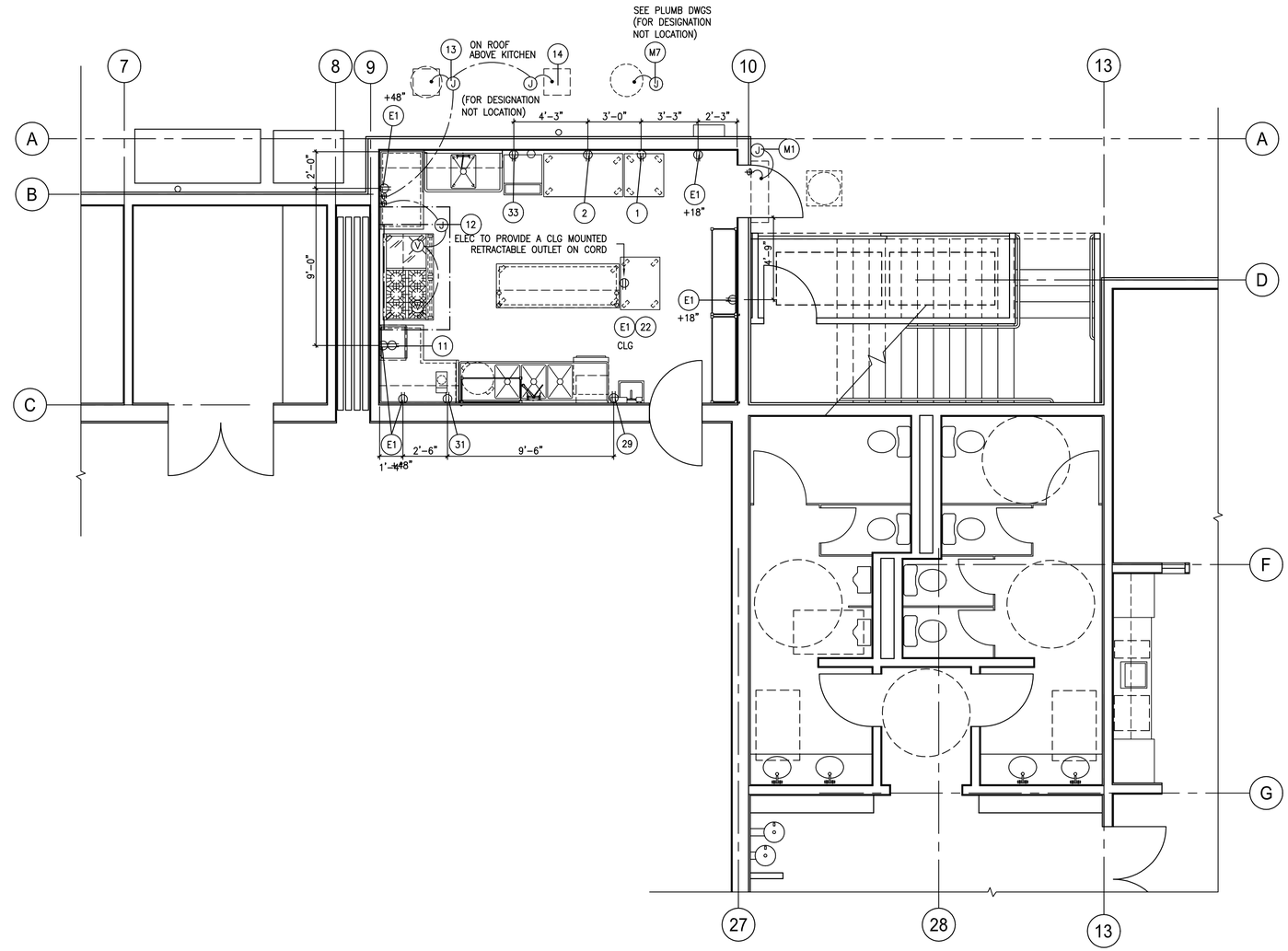

1 / FS4 ELECTRICAL PLAN

1/4"=1'–0"

DESIGNERS AND SUPPLIERS OF EQUIPMENT AND INTERIORS FOR HOTELS, RESTAURANTS AND INSTITUTIONS

THIS DOCUMENT WITH THE IDEAS AND COMPUTER DATA INCORPORATED HEREIN, AS AN INSTRUMENT OF PROFESSIONAL SERVICE, IS THE PROPERTY OF EAST BAY RESTAURANT SUPPLY, INC. AND IS NOT TO BE USED OR COPIED IN WHOLE OR IN PART FOR ANY MANNER WITHOUT THE EXPRESS WRITTEN AUTHORIZATION OF EAST BAY RESTAURANT SUPPLY, INC.

EAST BAY RESTAURANT SUPPLY, INC. since 1934
Kitchen Design Consultants
49 FOURTH STREET OAKLAND, CA. 94607 (510) 465-4300 FAX (510) 465-5521

CONTENT: ELECTRICAL PLAN/ SCHEDULE ELECTRICAL SYMBOLS

PROJECT: Veterans Community Kitchen

LOCATION: 400 Hartz Ave Danville, CA 94526

NO.	REVISION	DATE:

PROJECT COORDINATOR: LARRY LA GRAVE

DRAWN BY: TQ

CHECKED BY: JOE RUK

SCALE: 1/4" = 1'–0"

DATE: ISSUE FOR CONSTRUCTION JUNE/25/2010

JOB NO.: 5052

SHEET NO.: FS4

SHEET 176 OF 186

Plot Date: Jun 22, 10

PLUMBING NOTES
FOR REFERENCE SEE ENGINEERING DWGS/SPEC

1. COMPLY WITH ALL COUNTY, STATE AND FEDERAL CODES, ORDINANCES, RULES AND REGULATIONS, INCLUDING ALL REQUIREMENTS OF SERVING AGENCIES. PAY ALL COSTS REQUIRED FOR METER INSTALLATION, SEWER TAPS, BUILDING APPLICATION FEES, ETC.
2. PLUMBER TO REFER TO ALL SHEETS, SPECIFICATIONS PRIOR TO ANY BIDDING. ANY DISCREPANCIES IN DRAWING OR JOB SITE CONDITIONS SHALL BE NOTED AND INDICATED ON THE BID SUBMITTAL.
3. PLUMBER TO REVIEW EXISTING CONDITIONS AND DETERMINE IF EXISTING SEWER/DRAINAGE SYSTEM WILL ALLOW FOR PROPER DRAIN PIPE SLOPE TO NEW FIXTURES. IF NOT, PLUMBING BID SHALL INCLUDE COST FOR NEW SYSTEM AND CONNECTION TO CITY SYSTEM (INCLUDING EXCAVATION, BACK FILL, SUMP PUMP, ETC. FOR A COMPLETE AND FINISH INSTALLATION, SEE PLUMBING DWGS).
4. ENGINEER SHALL DETERMINE TOTAL PROJECT REQUIREMENTS AND DETERMINE IF INCREASED SIZE OF SERVICE IS REQUIRED FOR GAS OR WATER. IF SO, PLUMBING BID PRICE SHALL INCLUDE WORK FOR NEW METERS, PIPING AND SERVICE CONNECTION PLUMBER TO COORDINATE AS SOON AS POSSIBLE WITH LOCAL SERVING AGENCY AND WATER DEPARTMENT.
5. PLUMBER SHALL PROVIDE ALL WATER, SEWER, VENT, GAS LINES, ETC. INSIDE DEMISED PREMISE AND TO CONNECTION POINTS OUTSIDE SPACE. ALL LINES SHALL RUN BELOW FLOOR, IN WALLS OR ABOVE CEILING. PLUMBER TO COMPLETE ALL TRENCHING AND BACK FILL WHERE REQUIRED FOR UNDERGROUND INSTALLATIONS.
6. PLUMBER TO PROVIDE WATER CONNECTIONS, FLOOR SINKS AND DRAINS FOR ALL FIXTURES AS REQUIRED. PLUMBER TO CONNECT ALL WATER LINES AND DRAINS TO EQUIPMENT AND FIXTURES; INCLUDING FIRE SUPPRESSION MECHANICAL VALVE. PROVIDE CLEANOUTS AT NEW SINKS PER C.P.C. SECTION 707.4.
7. SOIL, WASTE, DRAIN AND VENTING BELOW AND INSIDE BUILDING TO BE SERVICE WEIGHT, NO HUB, CAST IRON EXCEPT FOR VENTS AND SMALLER USE COOPER PIPES OR GALVANIZED STEEL.
8. PVC AND ABS PIPES NOT APPROVED BY LOCAL CODES ARE NOT ACCEPTABLE. ABS & PVC DWV PIPING INSTALLATIONS ARE LIMITED TO RESIDENTIAL CONSTRUCTION NOT MORE THAN TWO STORIES IN HEIGHT. C.P.C. SECTION 701.1.2α (HCD1 & 2, DSA)
9. INSTALL FLOOR, WALL OR CEILING CLEAN OUT WHERE REQUIRED BY CODE OR WHERE IT WILL ALLOW FOR BEST ACCESS FOR CLEANING OUT BLOCKAGE IN PIPES.
10. WATER PIPING ABOVE GROUND SHALL BE TYPE "M" HARD DRAWN COPPER.
11. WATER PIPING BELOW GROUND SHALL BE TYPE "L" SOFT DRAWN COPPER. ALL JOINTS SHALL BE MADE ABOVE GRADE AND CONCRETE SLAB (NO CONCEALED JOINTS).
12. INDIRECT DRAWN LINES SHALL BE TYPE "L" SOFT DRAWN COPPER WITH SWEAT SOLDER JOINTS.
13. ALL HORIZONTAL DIMENSIONS ARE TAKEN FROM FACE OF STUD (FOS) OR FACE OF WALL (FOW) TO CENTERLINE OF PIPE UNLESS OTHERWISE NOTED.
14. ALL PIPES NOTED UP 12", ETC. TO STUB OUT OF WALL AT HEIGHT GIVEN. PIPE HEIGHT IS FROM FINISHED FLOOR (AFF) TO CENTERLINE OF PIPE AND NOT FROM SUBFLOOR, CONCRETE SLAB OR TOP OF EQUIPMENT BASE.
15. SECURELY FASTEN ALL PIPING TO THE BUILDING STRUCTURES BY MEANS OF HANGERS, SUPPORTS, GUIDES, ANCHORS AND SWAY BRACES TO MAINTAIN PIPE ALIGNMENT, TO PREVENT SAGGING AND TO PREVENT NOISE AND EXCESSIVE STRAIN ON PIPING DUE TO MOVEMENT UNDER OPERATING CONDITIONS.
16. PIPE HANGERS SHALL BE DESIGNED TO SUPPORT WEIGHT OF PIPE AND WEIGHT OF THE CONTENTS IN THE PIPE.
17. PROVIDE A HANGER NOT MORE THAN 12" FROM THE POINT OF CHANGE OF DIRECTION OF A PIPE RUN IN BOTH HORIZONTAL AND VERTICAL PLAN.
18. DO NOT SUPPORT PIPING OR VALVES FROM EQUIPMENT PIECES.
19. DO NOT SPRING OR FORCE PIPING DURING INSTALLATION.
20. DO NOT SLEEVE STRUCTURAL MEMBERS WITHOUT CONSENT OF THE SHELL ARCHITECT/ENGINEER. REVIEW ALTERNATIVE LAYOUT OF RUNS PRIOR TO PLACING ANY SLEEVES. IF NECESSARY, PLUMBER SHALL BE RESPONSIBLE FOR X-RAYING SLAB TO DETERMINE CONCEALED MEMBERS (E.G. POST TENSION SLAB WITH CABLES).
21. PROVIDE A TIGHT SEAL OF INCOMBUSTIBLE MATERIAL AROUND ALL PIPES WHICH PENETRATE FIRE SEPARATIONS. PROVIDE COLLARS OR TRIM RING AROUND PIPING TO RETAIN PACKING.
22. SLOPE ALL DRAINAGE PIPING WITHIN THE BUILDING WITH A MINIMUM FLOW FALL OF 1/4" PER FOOT.
23. INSTALL ALL PIPING CONCEALED IN WALLS, BELOW FLOORS, ABOVE CEILINGS OR FURRED OUT DRYWALL AREAS.
24. PLUMBER/GENERAL CONTRACTOR TO COORDINATE FLOOR, WALL AND CEILING PENETRATIONS WITH OTHER TRADES. WORK TO AVOID CONFLICTING ROUGH-IN INSTALLATIONS. REVIEW WITH PROJECT COORDINATOR.
25. ALL WASTE AND WATER PIPING PENETRATING CONCRETE FLOOR SLAB SHALL BE WRAPPED FOR PROTECTION.
26. PLUMBER TO MAINTAIN 10'-0" MINIMUM SEPARATION BETWEEN VENTS THROUGH ROOF AND OUTSIDE AIR INTAKES. VERIFY IF EXISTING VENTS CAN BE REUSED; IF NOT, PROVIDE NEW ONE TO ROOF,.
27. INSTALL DIELECTRIC FITTINGS BETWEEN FERROUS AND NON FERROUS MATERIALS. FERROUS METAL GAS PIPING EXPOSED IN EXTERIOR LOCATIONS SHALL BE PROTECTED FROM CORROSION IN A MANOR SATISFACTORY TO THE ADMINISTRATIVE AUTHORITY (i. e. GALVANIZED PIPE) AS PER C.P.C. SECTION 1211.10.
28. PLUMBER TO FURNISH AND INSTALL PRESSURE REGULATOR RELIEF VALVE AND CHECK VALVE ON MAIN SUPPLY TO INSURE THAT WATER PRESSURE DOES NOT EXCEED 60 PSI. PROVIDE MAIN SHUT OFF VALVE AND LOCATE FOR EASY ACCESS BY OWNER.
29. PROVIDE A VACUUM BREAKER OR BACK FLOW PREVENTION DEVICE AT MOP SINK (INTEGRAL PART OF FAUCET). #M4
30. FIXTURE INLETS AND OUTLETS WITH HOSE ATTACHMENTS WHICH MAY CONSTITUTE A CROSS-CONNECTION SHALL BE PROTECTED BY AN APPROVED, NON-REMOVABLE TYPE BACKFLOW PREVENTION DEVICE OR BY AN APPROVED VACUUM BREAKER INSTALLED AT LEAST 6" ABOVE THE HIGHEST POINT OF USAGE AND LOCATED ON THE DISCHARGE SIDE OF THE LAST VALVE.
31. PROTECT WATER LINE CONNECTIONS TO EQUIPMENT WITH APPROVED AIR GAP OR APPROVED BACKFLOW PRESSURE PREVENTER E.G. CABONATED BEVERAGE DISPENSER.
32. PROVIDE SHUT OFF VALVE (SOV), IF AN AIR CHAMBER WATER HAMMER DEVICE IS SELECTED, THEN PROVIDE A SERVICE ACCESS PANEL AS REQUIRED PER C.P.C. SECTION 609.10.1.
33. PLUMBER TO PROVIDE VALVES AND FITTINGS NECESSARY TO CONNECT ALL LINES EVEN IF THEY ARE NOT PROVIDED WITH EQUIPMENT EITHER SUPPLIED BY OTHERS OR BY THE PLUMBER.
34. PLUMBER TO PROVIDE ESCUTCHEON COVERS, RINGS ETC. AT ALL FLOOR, WALL AND CEILING PENETRATIONS FOR PLUMBING LINES AND/OR FIXTURES. ALL GAPS, HOLES ETC. AROUND LINES AT PENETRATIONS SHALL BE SEALED AND CAULKED SOLIDLY AS PER HEALTH DEPARTMENT REQUIREMENTS.
35. FLOOR SINK INSTALLATION IS CRITICAL AND MUST BE PLACED EXACTLY ACCORDING TO PLAN DIMENSIONS. ANY DISCREPANCIES SHALL BE REVIEWED WITH PROJECT COORDINATOR OR EQUIPMENT SUPPLIER. FLOOR SINKS SHALL BE INSTALLED FLUSH WITH FINISHED FLOOR; THEREFORE, REVIEW ALL FLOOR FINISHES AND THICKNESS WITH GENERAL CONTRACTOR PRIOR TO SETTING IN FIELD. PLUMBER SHALL CHECK ALL SINK ELEVATIONS PRIOR TO POURING OF CONCRETE SLAB OR TILE MORTAR BED. SIZE OF FLOOR SINK SHALL BE 12"X12"X8" DEEP. #P1

PLUMBING NOTES (CONTINUED)

36. ALL FLOOR SINKS TO BE SUPPLIED WITH ACID RESISTING ENAMELED CAST IRON GRATE WITH 1/4 OPENING AND DOME STRAINER. #P1
37. FLOOR SINKS OR OTHER INDIRECT WASTE RECEPTORS MUST BE READILY ACCESSIBLE FOR CLEANING. #P1
38. PLUMBER TO RUN ALL INDIRECT LINES AND DRAINS TO APPROPRIATE FLOOR SINK (NUMBER OF DRAINS TO MATCH FLOOR SINK CAPACITY). #P1
39. PLUMBER TO DRAIN ALL NOTED REFRIGERATION UNITS TO FLOOR SINKS, INCLUDING REFRIGERATOR COILS, UNLESS OTHERWISE NOTED. #P1
40. PLUMBER TO PROVIDE COLD WATER TRAP PRIMER WITH FLOOR DRAINS ALONG WITH ACCESS TO VALVE CONTROL.
41. PLUMBER TO SUPPLY/ INSTALL NEW HOT WATER HEATER. PROVIDE INSULATION BLANKET AROUND UNIT AND EXPANSION TANK, SIZE PER HOT WATER DEMAND. SEISMIC BRACING ON HWH. #M7
42. INSTALLATION INSULATION AROUND ALL HOT WATER PIPING IN WALL OR ABOVE CEILINGS. INSULATE DRAIN LINES FROM ICE SINKS, ICE BINS, OR ICE PANS TO ELIMINATE CONDENSATION ON THESE ITEMS.
43. PLUMBER SHALL CONNECT FIXTURE WASTE LINES TO GREASE INTERCEPTOR AS REQUIRED BY CODE. #M2
44. HOT AND COLD RUNNING WATER UNDER PRESSURE SHALL BE PROVIDED IN ALL AREAS IN WHICH FOOD IS PREPARED OR UTENSILS ARE WASHED. ALL HAND WASHING FACILITIES SHALL BE EQUIPPED WITH HOT AND COLD RUNNING WATER PER HEALTH DEPARTMENT.
45. PER HEALTH DEPARTMENT REQUIREMENT, A TEMPERATURE AND PRESSURE GAUGE SHALL BE INSTALLED IN HOT WATER TO DISHWASHER AS CLOSE AS POSSIBLE TO ENTRY INTO MACHINE. ALSO, A GAUGE COOK SHALL BE ATTACHED AS CLOSE AS POSSIBLE TO TEMPERATURE GAUGE FOR THE PURPOSE OF TESTING THE ACCURACY OF THE INSTALLED THERMOMETER. #33
46. DISHWASHING MACHINES MAY BE CONNECTED DIRECTLY TO THE SEWER IMMEDIATELY DOWNSTREAM FROM A FLOOR DRAIN OR FLOOR SINK, VERIFY IF THEY MAY BE DRAINED THROUGH AN APPROVED INDIRECT CONNECTION SUCH AS A FLOOR SINK OF ADEQUATE CAPACITY. #33
47. IF REQUIRED BY THE BUILDING DEPARTMENT, THE ENGINEER, UNDER HIS CONTRACT, SHALL PROVIDE DRAWINGS OR DIAGRAMS OF PIPING LAYOUT, SEWER PIPE SIZES, VENTING CONNECTIONS, ETC.
48. PLUMBER SHALL REVIEW OPERATION OF EQUIPMENT, LOCATION OF VALVES, ETC. WITH THE OWNER AND/OR HIS REPRESENTATIVE AT THE COMPLETION OF THE PROJECT.
49. FAUCETS FOR KITCHEN SINKS SHALL BE INSTALLED WHICH DO NOT EXCEED A WATER FLOW RATE OF 2.2 GALLONS (8.4 LITERS) PER MINUTE PER C.P.C. SECTION 402.7.
50. SELF-CLOSING OR SELF-CLOSING METERING FAUCETS SHALL BE INSTALLED ON LAVATORIES INTENDED TO SERVE THE TRANSIENT PUBLIC SUCH AS THOSE IN, BUT NOT LIMITED TO, SERVICE STATIONS, TRAIN STATIONS, AIRPORTS, RESTAURANTS AND COMMUNITY HALLS. METERED FAUCETS SHALL DELIVER NOT MORE THAN 0.25 GALLONS (1.0 LITERS) OF WATER PER USE AS REQUIRED BY C.P.C. SECTION 402.6. FAUCET CONTROLS AND OPEREATION MECHANISMS AT COMMON-USE KITCHEN AND/OR BAR/SINK AREAS SHALL BE SUCH THAT THEY SHALL: (1) BE OPERABLE WITH ONE HAND AND SHALL NOT REQUIRE GRASPING, PINCHING, OR TWISTING OF THE WRIST; (2) REQUIRE NO MORE THAN 5 LBS. FORCE TO ACTIVATE; AND (3) BE LEVER-OPERATED, PUSH-TYPE, ELECTRONICALLY CONTROLLED, OR SIMILAR PER CBC SECTION 1115B2.1.6.1
51. ANY SPRAY HOSE OVER COMPARTMENTED SINK SHALL PROTECT POTABLE WATER SUPPLY BY A LISTED NON-REMOVABLE HOSE BIBB TYPE BACKFLOW PREVENTER OR BY A LISTED ATMOSPHERIC VACUUM BREAKER INSTALLED AT LEASE SIX INCHES ABOVE THE HIGHEST POINT OF USAGE LOCATED ON THE DISCHARGE SIDE OF THE LAST VALVE. C.P.C. SECTION 603.4.7.
52. ALL BUILDING SUPPLY SYSTEMS IN WHICH QUICK-ACTING VALVES ARE INSTALLED SHALL BE PROVIDED WITH DEVICES TO ABSORB HIGH PRESSURES (WATER HAMMER) FROM THE QUICK CLOSING OF THESE VALUES PER C.P.C. SECTION 609.10.
53. THE OVERFLOW FROM EVAPORATIVE COOLERS AND SIMILAR WATER SUPPLIED EQUIPMENT OF SIMILAR AIR CONDITIONING EQUIPMENT SHALL BE COLLECTED AND DISCHARGED TO AN APPROVED PLUMBING FIXTURE OR DISPOSAL AREA PER CPC SECTION 815.0 AND CMC 310.1.
54. FOOD DISPOSAL AND DISHWASHERS ARE PROHIBITED TO DISCHARGE INTO ANY GREASE TRAP PER CPC SECTION 1015.0.
55. PROVIDE AN APPROVED BACKFLOW PREVENTION DEVICE ON THE WATER SUPPLY TO THE EVAPORATIVE COOLER MAU PER CPC SECTION 603.4.9.
56. POT SINKS, SCULLERY SINKS, DISWASHER SINKS, SILVERWARE SINKS, COMMERCIAL DISHWASHING MACHINES, SILVERWARE WASHING MACHINES, AND OTHER SIMILAR FIXTURES SHALL BE CONNECTED DIRECTLY TO THE DRAINAGE SYSTEM PER CPC SECTION 704.3
57. AT SODA FOUNTAIN INDIRECT WASTE, THE DEVELOPED LENGTH FROM THE FIXTURE OUTLET TO THE RECEPTOR SHALL NOT EXCEED FIVE (5) FEET PER CPC 801.3
58. DRAINAGE CONNECTIONS SHALL NOT BE MADE WITHIN EIGHT FEET OF ANY VERTICAL TO HORIZONTAL CHANGE OF DIRECTION OF A STACK CONTAINING SUDS-PRODUCING FIXTURES (I.E. DISHWASHER) PER CPC 711.0

ELECTRICAL NOTES
FOR REFERENCE SEE ENGINEERING DWGS/SPEC

1. FURNISH AND INSTALL, INCLUDING LABOR, SUPERVISION, MATERIALS, TOOLS, SERVICES, TRANSPORTATION, OVERHEAD COSTS, FEES, PLAN CHECK FEES, INSPECTION CHARGES, ROYALTIES, ETC.; A COMPLETE ELECTRICAL INSTALLATION AS SPECIFIED HEREIN AND INDICATED ON ALL ELECTRICAL AND OTHER DRAWINGS, E.G. CONTROL WIRING FOR MECHANICAL SYSTEM, IN AN APPROVED, NEAT, FIRST CLASS, FINISHED, SAFE, WORKMANSHIP LIKE MANNER THAT COMPLIES WITH ALL APPLICABLE LOCAL, STATE, FEDERAL AND SERVING ELECTRICAL AND TELEPHONE UTILITIES, ETC. CODES, ORDINANCES, RULES, REGULATIONS, STANDARDS, ETC. INCLUDING CURRENT ADDENDA AND ERRATA. THE ENTIRE ELECTRICAL INSTALLATION SHALL COMPLY OR SURPASS THE MOST RECENT EDITION OF THE NATIONAL ELECTRICAL CODE PER OCCUPATIONAL SAFETY AND HEALTH ADMINISTRATION (OSHA). ALL EQUIPMENT SHALL MEET U.L. APPROVAL. ALL WORK MEETS 2006 NEC.
2. REFER TO ALL SHEETS, SPECIFICATIONS PRIOR TO ANY BIDDING. ANY DISCREPANCIES IN DRAWINGS OR JOB SITE CONDITIONS SHALL BE NOTED AND INDICATED ON BID SUBMITTAL.
3. ALTHOUGH THE DRAWINGS HAVE ENDEAVORED TO SHOW ALL UTILITIES AT THE PROJECT SITE, ALL UTILITY LOCATIONS ARE NOT NECESSARY KNOWN OR SHOW. ELECTRICIAN SHALL DETERMINE ELECTRICAL SERVICE TO EXISTING PROJECT SPACE. ALSO WITHOUT LIMITATION, THE ELECTRICIAN SHALL BE RESPONSIBLE AT HIS OWN COST FOR ALL WORK EXPANSES OR SPECIAL PRECAUTIONS CAUSED BY THE EXISTENCE OR PROXIMITY OF UTILITIES ENCOUNTERED AT SITE (MAY INCLUDE COMMUNICATIONS CABLES OR HIGH VOLTAGE CABLES). WHEN CORE DRILLING, CUTTING, ETC. IN THE VICINITY OF THE CABLES, SPECIAL PRECAUTIONS SHALL BE OBSERVED BY THE ELECTRICIAN TO GUARD AGAINST ANY DAMAGE OR INJURY.
4. ELECTRICIAN SHALL MAINTAIN ELECTRICAL SERVICE (EVEN TEMPORARY WIRING AND POWER) TO BUILDING SPACE. IF NECESSARY TO CUT OFF POWER, PROPER AND TIMELY REQUEST TO LANDLORD SHALL BE MADE AND SHUT DOWN DURATION OF POWER CUT OFF SHALL BE KEPT TO A MINIMUM.
5. ELECTRICIAN SHALL COMPLETE ANY DEMOLITION WORK AS REQUIRED FOR NEW WORK, SUCH AS REMOVING EXISTING DRYWALL, PLASTER, STUDS AND RELOCATING EXISTING UTILITIES AS REQUIRED.

ELECTRICAL NOTES (CONTINUED)

6. ENGINEER SHALL DETERMINE THE NEW ELECTRICAL SERVICE LOAD REQUIRED FOR RESTAURANT EQUIPMENT, LIGHTING, ETC. ELECTRICIAN TO REVIEW POWER SUPPLY WITH LOCAL ELECTRIC POWER AGENT AS SOON AS POSSIBLE IN OTHER TO MEET HIS WORK SCHEDULE. ENGINEER TO SIZE, ELECTRICIAN TO INSTALL POWER PANELS AND MAIN SWITCHBOARD/GEAR.
7. ELECTRICIAN TO LABEL ALL PANELS AND CIRCUIT BREAKERS IN PANELS FOR EASE OF IDENTIFICATION.
8. ALL WIRING MUST BE IN RIGID CONDUIT OR EMT (ELECTRIC METALLIC CONDUIT) OR FLEX METAL CONDUIT (PIGTAILS TO UNITS ON DIRECT CONNECTIONS), OR SEAL-TIGHT FLEX CONDUIT. ALL CONDUITS SHALL BE INSTALLED INSIDE WALLS OR CABINETS AND CONCEALED WHEREVER POSSIBLE.
9. ELECTRICIAN TO CONNECT AND PROVIDE POWER TO ALL FIXTURES SUPPLIED BY ELECTRICIAN, FOOD SERVICE, DECOR CONTRACTOR, OR OWNER. IF NOT POSSIBLE OVERHEAD OR IN WALL, ELECTRICIAN SHALL DRILL THROUGH FLOOR AND RUN UNDERGROUND FOR FEEDS TO ITEMS OR GENERAL AREA FEEDS.
10. ENGINEER TO SIZE ALL ELECTRICAL CIRCUIT BREAKERS, WIRE DIAMETERS, CONDUITS, JUNCTION BOXES, ETC. FOR LOAD REQUIREMENTS. ELECTRICIAN TO PROVIDE ALL JUNCTION BOXES AND OUTLETS IN WALLS; INSTALL FLUSH WITH FINISHED WALL OR SPLASH UNLESS OTHERWISE NOTED. EXTERNAL WIRING FOR FIXTURES TO BE CONNECTED BY ELECTRICIAN. NO EXPOSED LINES. WHERE NECESSARY, INSTALL EXTENSION RINGS ON OUTLETS THROUGH CABINET OR EQUIPMENT BACK SPLASHES.
11. ELECTRICIAN SHALL BE RESPONSIBLE FOR VERIFYING THE ELECTRICAL CHARACTERISTICS AND ADDITIONAL REQUIREMENTS OF ALL THE ELECTRICAL FOOD SERVICE EQUIPMENT, INCLUDING OUTLETS, PLUGS AND ANY EXTERNAL WIRING (FLEXIBLE CONDUIT DIRECT CONNECTIONS FROM JUNCTION BOXES TO UNIT). EQUIPMENT CUT SHEETS SHALL BE PROVIDED. VERIFY AND COORDINATE WITH FOOD SERVICE EQUIPMENT SUPPLIER AND COMPLY AS REQUIRED.
12. ELECTRICIAN SHALL VERIFY AND COORDINATE WITH MECHANICAL CONTRACTOR ON THE LOCATION OF MECHANICAL EQUIPMENT SUCH AS HOOD SUPPLY AND EXHAUST FANS (E.G. VOLTAGE, PHASE, HORSE POWER, AMPERAGE, CONTROL WIRING, NUMBER OF CONNECTIONS, ETC. AND COMPLY AS REQUIRED).
13. ALL HORIZONTAL DIMENSIONS ARE TAKEN FROM FACE OF STUD (FOS) OR FACE OF WALL (FOW) TO CENTERLINE OF OUTLET, UNLESS OTHERWISE NOTED.
14. ALL OUTLETS NOTED UP 12", ETC. TO BE PLACED IN WALL AT HEIGHT GIVEN (HEIGHT IS MEASURED FROM FINISHED FLOOR NOT FROM CONCRETE SLAB, WOOD SUB-FLOOR OR TOP OF EQUIPMENT BASE) TO CENTERLINE OF OUTLET.
15. INSTALL OUTLETS WHERE DIMENSIONED. IF NECESSARY, INSTALL BLOCKING OR FRAMING BRACKETS BETWEEN STUDS.
16. ANY OUTDOOR ELECTRICAL OUTLETS, SWITCHES OR CONNECTIONS SHALL BE WEATHERPROOF. PROVIDE A UTILITY OUTLET ON ROOF NEAR MECHANICAL OR REFRIGERATION EQUIPMENT. RECEPTACLES ON THE ROOF SHALL BE PROVIDE WITH GROUND-FAULT CIRCUIT-INTERRUPTER PROTECTION FOR PERSONNEL, C.E.C. ARTICLE 210-8(b) (2). A 120-VOLT TO BE LOCATED WITHIN 25 FEET OF THE EQUIPMENT FOR SERVICE AND MAINTENANCE PURPOSES. C.M.C/ SECTION 309.0.
17. ALL OUTLETS WITHIN 6'-0" OF WATER SOURCE SHALL BE GFI (GROUND FAULT INTERRUPTER) TYPE FOR ELECTRIC SHOCK PROTECTION.
18. RECEPTACLES SHALL BE MOUNTED NOT LESS THAN 15" TO BOTTOM OF BOX ABOVE THE FINISH FLOOR IN ORDER TO MEET DISABLED ACCESSIBILITY REQUIREMENTS.
19. ELECTRICIAN TO CONNECT ALL COMPRESSOR AND FAN MOTOR WITH DISCONNECT, MAGNETIC STARTER OR CONTROL SWITCHES. PROVIDE OVER-CURRENT PROTECTION FOR MOTORS NOT FURNISHED WITH INTEGRAL ITEM. PROVIDE CONTACTORS FOR ELECTRICAL COOKING EQUIPMENT WHICH MUST SHUT DOWN WHEN FIRE SUPPRESSION SYSTEM IS ACTIVATED. AN APPROVED INDEPENDENT MEANS OF DISCONNECT FOR THE ELECTRICAL SUPPLY TO EACH PIECE OF EQUIPMENT SHALL BE PROVIDED IN SIGHT OF THE EQUIPMENT SERVED WHEN THE SUPPLY VOLTAGE EXCEEDS 50 VOLTS PER C.M.C. SECTION 309.0.
20. LIGHTING, POWER, TELEPHONE AND COMMUNICATION OUTLETS SHALL NOT BE PLACED BACK TO BACK IN COMMON WALLS.
21. NO MORE THAN THREE (3) UTILITY OUTLETS SHALL BE ON ONE CIRCUIT.
22. PROVIDE PLUGS AND CORDS FOR MOVABLE EQUIPMENT WHERE THEY ARE NOT STANDARD WITH MANUFACTURER. SHORTEN CORDS IF REQUESTED BY EQUIPMENT SUPPLIER OR OWNER.
23. ELECTRICIAN TO INSTALL 1 INCH METAL CHASE CONDUIT FOR CASH REGISTER COMPUTER CABLE BETWEEN EACH UNIT. PROVIDE PULL CORD FOR FUTURE CASH REGISTER CABLE (SHIELDED, 4 WIRE, TWISTED PAIRS WITH SEPARATE GROUND WIRE) OR INSTALL CABLE IF PROVIDED BY OWNER OR CASH REGISTER SUPPLIER. VERIFY REQUIREMENT WITH OWNER.
24. AT ISOLATED CLEAN CIRCUIT (ITEM #M-), USE RED COLOR OUTLETS AS INDICATION OF SPECIAL USE (SPECIAL OUTLETS FOR CASH REGISTER, COMPUTER, PRINTERS OR OTHER SPECIAL USE). VERIFY REQUIREMENT WITH OWNER
25. ELECTRICIAN AND GENERAL CONTRACTOR TO COORDINATE FLOOR, WALL AND CEILING PENETRATIONS WITH OTHER TRADES AND WORK TO AVOID CONFLICTING ROUGH-IN INSTALLATIONS. REVIEW WITH PROJECT COORDINATOR.
26. ELECTRICIAN TO PROVIDE AND RUN CONDUIT CHASE FOR TELEPHONE AS INDICATED. INSTALL JUNCTION BOXES WITH COVER PLATES AND PULL CORD FOR TELEPHONE INSTALLER. RUN BACK TO BUILDING TELEPHONE TERMINAL BOARD.
27. ALL CONDUIT PENETRATIONS THROUGH FIRE RATED FLOORS, WALLS OR CEILINGS SHALL BE SEALED TO MAINTAIN THE FIRE SEPARATION. ELECTRICIAN SHALL VERIFY AND RECEIVE APPROVAL FROM LANDLORD AND/OR BUILDING ARCHITECT/ENGINEER PRIOR TO ANY SLAB CORE DRILLING ON PENETRATING STRUCTURAL MEMBERS (E.G. POST TENSION SLAB WITH CABLES). IF NECESSARY, ELECTRICIAN SHALL BE RESPONSIBLE FOR X-RAYING SLAB TO DETERMINE CONCEALED MEMBERS.
28. INSTALL A POLYETHYLENE PULL ROPE IN ALL EMPTY CONDUITS.
29. IN ALL KITCHEN FOOD PREPARATION, DISH WASHING AND SERVING AREAS, PROVIDE STAINLESS STEEL OUTLET COVER PLATES. IN OTHER AREAS, PROVIDE STANDARD WHITE, IVORY OR BROWN COVER PLATES AS DIRECTED, OR MATCH ADJACENT FINISH COLOR.
30. ALL INTERIOR AND/OR EXTERIOR LIGHTING CIRCUITS TO BE THE RESPONSIBILITY OF THE ELECTRICIAN. IF ANY DISCREPANCIES WITH SWITCHING LAYOUT, VERIFY WITH ARCHITECT. SWITCHING SHALL MEET CODE ENERGY REQUIREMENTS. A SEPARATE 20 AMP BRANCH CIRCUIT SHALL BE PROVIDED FOR OUTSIDE SIGNS ON COMMERCIAL BUILDINGS C.E.C. ARTICLE 600-5 (α).
31. ALL LIGHTING FIXTURES SHALL CONTAIN NEW LAMPS OF POWER, TYPE AND SIZE AS SPECIFIED AND SHALL BE FURNISHED BY ELECTRICIAN UNLESS OTHERWISE NOTED.
32. FURNISH TWO SPARE LAMPS FOR EACH TYPE OF LIGHT FIXTURE USED.
33. ELECTRICIAN SHALL VERIFY ALL FIXTURE LOCATIONS PRIOR TO INSTALLING OR CUTTING HOLES IN CEILING.
34. ALL NEW LIGHT SWITCHES AT +48", UNLESS OTHERWISE NOTED (DISABLED ACCESS HEIGHT AT +48").
35. IF ANY EXPOSED INCANDESCENT LAMPS AND/OR FLUORESCENT TUBES ARE INSTALLED, THEY SHALL BE PROVIDED WITH SAFETY TOOB-GARD UNBREAKABLE PLASTIC SLEEVES OR PLASTIC LENS WHEN OVER FOOD DISPLAY OR PREPARATION AREAS.
36. NEW FLUORESCENT FIXTURES SHALL BE PROVIDED WITH ENERGY SAVER ELECTRONIC BALLASTS.
37. ELECTRICIAN SHALL PROVIDE EMERGENCY POWER SYSTEM, LIGHTS AND EXIT SIGNS AS REQUIRED BY BUILDING DEPARTMENT CODES ON LIGHTING (1.5 HOUR ENDURANCE BATTERIES WITH UNIT ON SEPARATE CIRCUIT OR WIRED AHEAD OF MAIN DISCONNECT). .

ELECTRICAL NOTES (CONTINUED)

39. ELECTRICIAN SHALL REVIEW OPERATION OF EQUIPMENT CIRCUIT BREAKERS, ETC. WITH OWNER AND/OR HIS REPRESENTATIVE AT COMPLETION OF THE PROJECT.
38. IF REQUIRED BY BUILDING DEPARTMENT, THE ENGINEER, UNDER HIS CONTRACT, SHALL PROVIDE DRAWINGS OR DIAGRAMS OF WIRES, BREAKER ARRANGEMENT, ETC.
40. SWITCHES, CONTROLS, ETC., USE TO OPERATE LIGHT, HEATING, COOLING, VENTILATION EQUIPMENT SHALL BE 48" ABOVE FINISH FLOOR, MEET DISABLED ACCESSIBILITY REQUIREMENTS.
41. UNDER CURRENT CODE NOT ONLY IS THERE A REQUIREMENT FOR ALL ELECTRIC POWER SOURCES FOR ELECTRICAL COOKING EQUIPMENT TO TURN OFF WHEN HOOD FIRE SUPPRESSION SYSTEM IS ACTIVATED BUT ALSO ALL ELECTRICAL OUTLETS OR OTHER SOURCES DIRECTLY UNDER THE HOOD. THEREFORE, THE ELECTRICIAN SHALL PROVIDE/INSTALL A CONTACTOR AT EQUIPMENT OR A SHUNT BREAKER AT PANEL(S) FOR THESE ITEMS. VERIFY CONTROL WIRING TO FIRE SUPPRESSION SYSTEM WITH SUPPLIER. #15
42. A). ALL U.L. LISTED EQUIPMENT SHALL BE INSTALLED AS PER THERE LISTING OR LABELING.
    B). GROUND CONNECTIONS TO BE MADE ON THE LINE SIDE OF THE NEUTUAL DISCONNECT LINK.
    C). ALL EQUIPMENT SHALL BE LISTED BY AN ACCEPTED AGENCY AND BEAR ITS LISTING LABEL.
43. PROVIDE BONDING FROM COLD TO HOT WATER PIPING TO COMPLY WITH CEC 250-104(C).

DESIGNERS AND SUPPLIERS OF EQUIPMENT AND INTERIORS FOR HOTELS, RESTAURANTS AND INSTITUTIONS

THIS DOCUMENT WITH THE IDEAS AND COMPUTER DATA INCORPORATED HEREIN IS A WORK PRODUCT OF A PROFESSIONAL SERVICE, IS THE PROPERTY OF EAST BAY RESTAURANT SUPPLY, INC. AND IS NOT TO BE USED OR COPIED IN WHOLE OR IN PART FOR ANY MANNER WITHOUT THE EXPRESS WRITTEN PERMISSION OF EAST BAY RESTAURANT SUPPLY, INC.

EAST BAY since 1934
RESTAURANT SUPPLY, INC.
Kitchen Design Consultants
49 FOURTH STREET OAKLAND, CA, 94607 (510) 465-4300 FAX (510) 465-3321

CONTENT: PLUMBING/ELECTRICAL NOTES REFRIGERATION NOTES

PROJECT: Veterans Community Kitchen

LOCATION: 400 Hartz Ave Danville, CA 94526

NO.	REVISION	DATE:

PROJECT COORDINATOR: LARRY LA GRAVE

DRAWN BY: TQ

CHECKED BY: JOE RUK

SCALE: NO SCALE

DATE: ISSUE FOR CONSTRUCTION JUNE/25/2010

JOB NO.: 5052

SHEET NO.: FS5

Plot Date: Jun 22, 10

HERE'S HOW THE NEW ANSUL R-102 SYSTEM WORKS

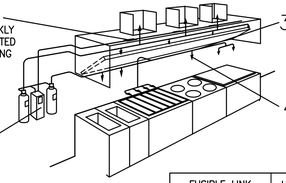

1 WHEN A FIRE OCCURS IN A PROTECTED AREA, IT IS QUICKLY SENSED BY DETECTORS LOCATED IN THE DUCTWORK OR COOKING APPLIANCE HOOD

2 THE DETECTORS TRIGGER THE ANSUL AUTOMAN RELEASING MECHANISM WHICH ACTUATES THE SYSTEM...PRESSURIZING THE AGANT STORAGE TANK

3 ANSULEX LIQUID FIRE SUPPRESSANT FLOWS THROUGH THE DISTRIBUTION PIPING TO THE DISCHARGE NOZZLES.

4 ANSULEX IS APPLIED DIRECTLY ON THE FIRE IN SPECIFIC SPRAY PATTERN... SUPPRESSING THE FIRE

TOTAL SYSTEM

THE RESTAURANT FIRE SUPPRESSION SYSTEM SHALL BE THE PRE-ENGINEERED, LIQUID AGENT, CARTRIDGE-OPERATED TYPE WITH FIXED NOZZLE AGENT DISTRIBUTION NETWORK. IT SHALL BE LISTED WITH UNDERWRITERS LABORATORIES, INC. (UL)

THE SYSTEM SHALL BE CAPABLE OF AUTOMATIC DETECTION AND ACTUATION WITH LOCAL OR REMOTE MANUAL ACTUATION. ACCESSORIES SHALL BE AVAILABLE FOR MECHANICAL OR ELECTRICAL GAS LINE SHUTOFF APPLICATIONS.

THE SYSTEM SHALL HAVE FIRE SUPPRESSION CAPABILITIES FOR THE FOLLOWING RESTAURANT HAZARD AREAS; VENTILATING STRUCTURES INCLUDING HOODS, DUCTS, PLENUMS, AND FILTERS; DEEP-FAT FRYERS; GRIDDLES AND RANGE TOPS; UPRIGHT,NATURAL CHARCOAL, OR CHAIN-TYPE BROILERS; ELECTRIC, LAVA ROCK, OR GAS-RADIANT CHAR-BROILERS.

A SYSTEM OWNER'S MANUAL SHALL BE AVAILABLE CONTAINING BASIC INFORMATION PERTAINING TO SYSTEM OPERATION. A DETAILED TECHNICAL MANUAL SHALL BE SUPPLIED INCLUDING SYSTEM DESCRIPTION, DESIGN, INSTALLATION, RECHARGE, AND MAINTENANCE PROCEDURES, PLUS ACCESSORY INSTALLATION AND RESET INSTRUCTIONS.

THE MANUFACTURER SHALL PROVIDE SERVICES THROUGH A NETWORK OF AUTHORIZED DISTRIBUTORS.

SYSTEM EQUIPMENT

REGULATED RELEASE MECHANISM

THE REGULATED RELEASE MECHANISM SHALL BE THE SPRING-LOADED, MECHANICAL/PNEUMATIC TYPE CAPABLE OF PROVIDING THE EXPELLANT GAS SUPPLY TO ONE OR TWO AGENT TANKS, DEPENDING ON THE CAPACITY OF THE NITROGEN CARTRIDGE USED. IT SHALL CONTAIN A FACTORY-INSTALLED REGULATOR DEADSET AT 100 PSI (690 KPA)

WITH AN INTERNAL RELIEF OF APPROXIMATELY 130-150 PSI (896-1034 KPA). IN THE "ARMED" POSITION, THE MAIN SPRING FORCE TO THE PUNCTURE PIN PISTON SHALL BE 150 LB. (68 KG). THE MECHANISM SHAL HAVE A VISUAL INDICATOR OF THE COOKED OR FIRE CONDITON WITHOUT HAVING TO OPEN THE ENCLOSURE.

THE REGULATED RELEASE MECHANISM SHALL HAVE THE FOLLOWING ACTUATION CAPABILITIES; AUTOMATIC ACTUATION BY A FUSIBLE LINK DETECTION SYSTEM; REMOTE MANUAL ACTUATION BY A MECHANICAL PULL STATION; LOCAL MANUAL ACTUATION BY S PUSH BUTTON LOCATED AT THE FRONT OF THE RELEASE MECHANISM ENCLOSURE. THE REGULATED RELEASE MECHANISM SHALL CONTAIN AN ACTUATOR ASSEMBLY, REGULATOR, EXPELLANT GAS HOSE, AND ONE 3 GALLON AGENT TANK HOUSED IN A CHROME-PLATED ENCLOSURE WITH COVER SHALL CONTAIN OPENINGS FOR THE PUSH BUTTON AND VISUAL INDICATOR.

THE REGULATED RELEASE MECHANISM SHALL BE COMPATIBLE WITH MECHANICAL GAS LINE SHUT-OFF DEVICES; OR, WHEN EQUIPPED WITH A FIELD OR FACTORY-INSTALLED SOLENOID AND SWITCH, IT SHALL BE COMPATIBLE WITH ELECTRIC GAS LINE OR APPLIANCE SHUT-OFF DEVICES.

AGENT

THE EXTINGUISHING AGENT SHALL BE A POTASSIUM CARBONATE, POTASSIUM ACETATE-BASED FORMULATION DESIGNED FOR FLAME KNOCKDOWN AND SECUREMENT OF GREASE-RELATED FIRES. IT SHALL BE AVAILABLE IN PLASTIC CONTAINERS WITH INSTRCTIONS FOR LIQUID AGENT HANDLING AND USAGE.

TANK AND BRACKET

THE LIQUID AGENT STORAGE TANK SHALL BE DEEP DRAWN CARBON STEEL CHROME-PLATED WITH A GALLON (11.4L) CAPACITY. THE SHELL ASSEMBLY SHALL MEET THE FOLLOWING PRESSURE TEST REQUIREMENTS: 100 PSI (890 KPA) WORKING PRESSURE, 300 PSI (2069 KPA) TEST PRESSURE, 300 PSI (4137 KPA) MINIMUM BURST PRESSURE.

THE TANK SHALL INCLUDE AN ADAPTOR/TUBE ASSEMBLY. THE ADAPTOR SHALL BE CHROME-PLATED STEEL WITH A 1/4-18 NPT FEMALE IN-LET AND A 1/2-14 NPT MALE OUTLET. THE PICK P TUBE SHALL BE CARBON STEEL - 1/2 IN. O.O. BY .028 WALL.

A WELDED STEEL BRACKET SHALL BE PROVIDED FOR MOUNTING OF ADDITIONAL TANKS IN A MINIMUM AMOUNT OF SPACE. THESE AGENT TANKS SHALL BE SECURED WITH HINGED BRACKET BANDS.

DISCHARGE NOZZLE

EACH DISCHARGE NOZZLE SHALL BE TESTED AND LISTED WITH THE RESTAURANT SYSTEM OR SPECIFIC APPLICATIONS. NOZZLE PLACEMENT SHALL BE DETERMINED BY THE SIZE OF THE ORIFICES IN THE NOZZLE TIP. THE NOZZLE TIP SHALL BE BRASS OR CHROME-PLATED BRASS, AND STAMPED WITH THE PART NUMBER AND FLOW RATING. THE NOZZLE TIP RETAINER AND BODY SHALL BE CHROME-PLATED BRASS. THE NOZZLE STRAINER SHALL BE BRASS WITH STAINLESS 50 MESH SCREEN. EACH NOZZLE TIP SHALL BE COVERED BY A PROTECTIVE BLOW-OFF CAP.

THE REGULATED RELEASE MECHANISM SHALL BE COMPATIBLE WITH A FUSIBLE LINK DETECTION SYSTEM. THE FUSIBLE LINK SHALL BE SELECTED AND IN-STALLED ACCORDING TO THE OOPERATING TEMPERATURE IN THE VENTILATING SYSTEM. THE FUSIBLE LINKS SHALL BE RATED AS FOLLOWS:

FUSIBLE LINK TEMPERATURE RATING	USE WHERE OPERATING TEMPERATURE DOES NOT EXCEED
280 F (130 C)	225 F (107 C)
360 F (182 C)	280 F (143 C)
450 F (232 C)	360 F (182 C)
500 F (260 C)	400 F (204 C)

THE FUSIBLE LINK SHALL BE SUPPORTED BY A DETECTOR BRACKET/LINKAGE ASSEMBLY. THE DETECTOR BRACKET SHALL BE 16 GA. COLD-ROLLED STAINLESS STEEL. THE DETECTOR LINKAGE SHALL BE 20 GA. COLD-ROLLED STAINLESS STEEL.

THE DETECTOR BRACKET/LINKAGE ASSEMBLY SHALL HAVE PROVISIONS FOR CONNECTING 1/2 IN. RIGID OR EMT THIN-WALL CONDUIT, AND 1/16 INCH (1.6 MM) DIAMETER FLEXIBLE STAINLESS STEEL ROPE. CHANGES IN THE DIRECTION OF THE CONDUIT AND STEEL ROPE SHALL BE ACCOMPISHED WITH DIE CAST ALUMINUM ALLOY, 90 PULLEY ELBOWS.

THE FOLLOWING ACCESSORY EQUIPMENT SHALL BE AVAILABLE, AND SHALL BE COMPATIBLE WITH THE LIQUID AGENT RESTAURANT FIRE SUPPRESSION SYSTEM: REMOTE MANUAL PULL STATION.

IF RELEASE MECHANISM IS NOT ACCESSIBLE FOR MANUAL ACTUATION, REMOTE MAMUAL PULL STATION SHALL BE PROVIDED AS THE PRIMARY MEANS OF MANUAL ACTUATION. THE PULL STATION SHALL BE THE GLASS BREAK-ROD TYPE, AND SHALL BE CONNECTED TO THE RELEASE MECHANISM TRIP LEVER BY MEANS OF 1/16 INCH (1.6MM) DIAMETER STAINLESS STEEL ROPE AND 1/2 INCH CONDUIT. THE PULL STATION SHALL BE LOCATED AT A DISTANCE OF NOT MORE THAN 125 FT. (38M) FROM THE RELEASE MECHANISM. THE MOUNTING HEIGHT OF THE PULL STATION SHALL BE IN ACCORDANCE WITH THE AUTHOUITY HAVING JURISDICTION.

MECHANICAL GAS LINE SHUTOFF VALVE

A UL LISTED, MECHANICAL GAS VALVE SHALL BE PROVIDED WHEN AUTOMATIC GAS LINE SHUT-OFF IS REQUIRED FOR INDOOR APPLICATIONS. IT SHALL BE ADAPTED TO THE RELEASE MECHANISM CARTRIDGE RECEIVER BY MEASURE OF A PNEUMATIC PISTON-TYPE AIR CYLINDER. THE VALVE SHALL HAVE RESILIENT SEATING WITH AN ALUMINUM BODY AND STAINLESS STEEL INTERNAL PARTS. IT SHALL BE A TWO-WAY, NORMALLY OPEN VALVE REQUIRING 4-15 LB. (1.8-6.8KG) OF PULL FORCE TO TRIP. THE VALVE (3/4 TO 2 IN.) SHALL HAVE AN EXTERNAL VISUAL INDICATOR OF THE CLOSED OR OPEN POSITION.

ELECTRIC GAS LINE SHUTOFF VALVE

AN UL LISTED, ELECTRIC GAS VALVE (NIC) SHALL BE PROVIDED WHEN AN ELECTRICAL METHOD OF GAS LINE SHUTOFF IS REQUIRED FOR INDOOR APPLICATIONS. THE GAS VALVE SHALL INCORPORATE AN ELECTRIC SNAP-ACTION SWITCH AND A MANUAL RESET RELAY WITH ITS ELECTRIC CIRCUIT FOR 110 VAC, 50/60 HZ OR 24 VAC, 50/60 HZ. IN 24 VAC APPLICATIONS. A TRANSFORMER WITH THE APPROPRIATE VOLTAGE RATING SHALL BE PROVIDED. THE GAS VALVE SHALL BE CONSTRUCTED OF ALUMINUM WITH AN OPERATING TEMPERATURE RANGE OF 32°F TO 120°F (0°C TO 49°C).

ELECTRIC SWITCH

AN UL LISTED, ELECTRIC SNAP-ACTION SWITCH (NIC) SHALL BE PROVIDED TO SHUTOFF ELECTRICAL POWER TO APPLIANCES, OR TO ACTIVATE ELECTRICALLY OPERATED DEVICES, DEPENDING ON THE APPLICATION, THE SWITCH SHALL BE EITHER SINGLE-POLE, DOUBLE THROW; DOUBLE-POLE, DOUBLE-THROW; OR FOUR-POLE, DOUBLE-THROW. THE SWITCH SHALL HAVE A RATING OF 15 AMPS, 1/3 HP, 125 OR 250 VAC WITH 5 AMPS AT 125 VAC "L," 112 AMP AT 125 VDC, OR 1/4 AMP AT 250 VDC. A RELAY SHALL BE SUPPLIED IF THE EQUIPMENT LOAD EXCEEDS THE RATED CAPACITY OF THE SWITCH.

PRESSURE SWITCH

A UL LISTED, PNEUMATICALLY OPERATED SWITCH (NIC) SHALL BE PROVIDED TO SHUTOFF ELECTRICAL POWER TO APPLIANCE, OR TO ACTIVATE ELECTRICALLY OPERATED DEVICES. THE SWITCH SHALL BE CONNECTED TO THE RELEASE MECHANISM CARTRIDGE RECEIVER UTILIAING 1/8 IN. COPPER TUBING AND FITTINGS. DEPENDING ON THE APPLICATION, THE SWITCH SHALL BE SINGLE-POLE, DOUBLE-THROW OR DOUBLE-POLE, DOUBLE-THROW. THE SWITCH SHALL HAVE A RATING OF 20 AMPS - 125, 250, OR 480 VAC WITH 10 AMPS AT 125 VAC "L," 1 HP-115 VAC, 2 HP230 VAC; 1/2 AMP SY 125 VDC; OR 1/4 AMP AT 250 VDC. A RELAY SHALL BE SUPPLIED IF THE EQUIPMENT LOAD EXCEEDS THE RATED CAPACITY OF THE SWITCH.

FEATURES

* FAST FLAME KNOCK-DOWN AND SECUREMENT OF GREASE-RELATED FIRES
* PROVIDES A COOLING EFFECT WHICH FURTHER ENHANCES ITS ABILITY TO PREVENT R811S8H.
* DESIGNED FOR A WIDE VARIETY OF RESTARANT HAZARDS
* LISTED BY UNDERWRITERS LABORATORIES, INC. (UL) AS PART OF THE R-102 RESTAURANT SYSTEM
* EASE OF RECHARGE AND POST-FIRE CLEANUP

WET CHEMICAL R-102

APPLICATION

ANSUL R-102 SYSTEMS ARE PRE-ENGINEERED WET CHEMICAL FIXED NOZZLE PIPED SYSTEMS FOR PROTECTION OF KITCHEN COOKING AND VENTILATING EQUIPMENT. ALL ANSUL R-102 SYSTEMS HAVE BEEN TESTED AND LISTED IN ACCORDANCE WITH UNDERWRITERS' LABORATORIES STANDARD AND MEET THE PROVISIONS OF NATIONAL FIRE PROTECTION ASSOCIATION'S "STANDARD FOR THE INSTALLATION OF EQUIPMENT FOR THE REMOVAL OF SMOKE AND GREASE LADEN VAPORS FROM COMMERCIAL COOKING EQUIPMENT," N.F.P.A. NO. 96, UL 300 LISTING.

TYPICAL APPLICATIONS INCLUDE PROTECTION FOR:

VENTILATING HOODS
VENTILATING DUCTS
FRYERS
GRIDDLES
RANGE TOPS
CHAR-BROILERS
UPRIGHT BROILERS

IF FIRE OCCURS, HEAT SENSITIVE FUSIBLE LINK DETECTORS ACTUATE A RELEASE WHICH PUNTURES A CO2 CAETRIDGE. WET CHEMICAL IS FORCED THROUGH DISTRIBUTION PIPING AND OUT NOZZLES MOUNTED IN PLENUM(S), EXHAUST DUCT(S) AND OVER COOKING APPLIANCES. UPON DISCHARGE THROUGH THE NOZZLES, THE WET CHEMICAL "FLOODS" THESE AREAS AND EXTINGUISHED THE FIRE.

SUGGESTED ARCHITECTURAL SPECIFICATIONS

THE FIRE CONTROL SYSTEM SHALL BE THE WET CHEMICAL PRE-ENGINEERED, PIPED, FIXED NOZZLE TYPE MANUFACTURED BY THE ANSUL COMPANY. IT SHALL BE SPECIFICALLY UL LISTED FOR THE HAZARD AND INSTALLED IN ACCORDANCE WITH NATIONAL FIRE PROTECTION ASSOCIATION STANDARD NO. 96 (LATEST REVISION). "STANDARD FOR THE INSTALLATION OF EQUIPMENT FOR THE REMOVAL OF SMOKE AND GREASE LADEN VAPORS FROM COMMERCIAL COOKING EQUIPMENT" AND CONFORM TO ALL LOCAL AND/ OR STATE CODES AND STANDARDS.

THE DESIGN OF THE SYSTEM SHALL PROVIDE FOR PROTECTION OF DUCT SYSTEMS, GREASE REMOVAL DEVICES AND HOODS, COOKING EQUIPMENT SUCH AS FAT FRYERS, RANGES, GRIDDLES AND BROILERS, WHICH MAY BE A SOURCES OF FUEL AND HEAT TO THE COOKING EQUIPMENT SHALL BE AUTOMATICALLY SHUT OFF UPON OPERATION OF THE SYSTEM.

THE SYSTEM SHALL BE CAPABLE OF AUTOMATIC (CONNECTED TO A SUITABLY LISTED SYSTEM OF DETECTION AND ACTUATION) AND MANUAL MECHANICAL OPERATION.

TYPICAL SYSTEM ACCESSORY OPTIONS

1. REMOTE MANUAL PULL STATION
2. PULLEY ELBOW
3. ALARM
4. FUSIBLE LINK DETECTOR
5. R-102 WET CHEMICAL STORAGE CHAMBER
6. ANSUL AUTOMAN RELEASE
7.
8. CONTACTOR BY ELEC.
9. ELEC. POWER SOURCE
10. MECHANICAL GAS SHUT-OFF VALVE (PLUMBER TO SIZE AND INSTALL)
11.
12.
13.
14. DUCT NOZZLE
15. DISTRIBUTION TEE (SPECIAL)
16. PLENUM NOZZLE
17. TEE, 1/2
18. CYCLONE NOZZLE, APPLIANCE

NOTE:

INSTALLING CONTRACTOR SHALL SUBMIT PLAN LAYOUT OF NOZZLES TO FIRE DEPT. FOR REVIEW/ APPROVAL AND OBTAIN REQUIRED PERMIT PRIOR TO INSTALLATION. HE SHALL PERFORM REQUIRED FIELD TEST OF EQUIPMENT INSTALLATION FOR FIRE INSPECTOR.

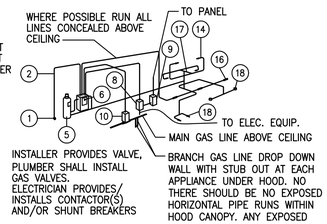

TYPICAL R-102 PROTECTING DEEP FAT FRYERS, GRIDDLES, HOOD AND DUCT

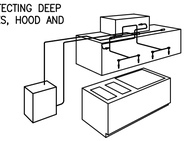

DEFERRED APPROVAL ITEM-SUPPLIER TO SUBMIT SHOP DRAWING FOR APPROVAL PRIOR TO FABRICATION AND INSTALLATION.

FIRE SUPPRESSION SYSTEM (15)
ALL GAS COOKING EQUIPMENT

1 / FS6

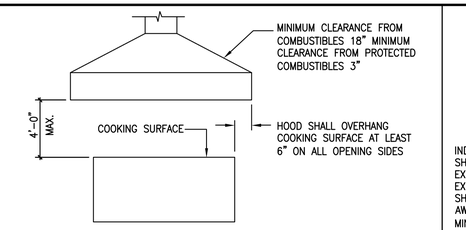

FOR REFERENCE & GENERAL INFORMATION

GENERAL-FOR ALL HOODS

1. IF GUTTERS ARE PROVIDED THEY SHALL DRAIN TO AN ACCESSIBLE RECEPTACLE
2. PROVIDE MINIMUM DISTANCE BETWEEN LOWER EDGE OF GREASE FILTER AND THE COOKING OR HEATING SURFACE PER CODE
3. GREASE FILTERS SHALL BE INSTALLED IN FRAMES OR HOLDERS WITH HANDLES AND BE READILY REMOVABLE FOR CLEANING
4. ALL JOINTS AND SEAMS SHALL BE GREASE TIGHT-USE SOLDER ONLY FOR SEALING JOINT AND SEAMS.
5. HOODS SHALL BE SECURELY FASTENED IN PLACE BY NON COMBUSTIBLE SUPPORTS.
6. TYPE I HOODS ALSO REQUIRE APPROVED FIRE-EXTINGUISHING SYSTEMS FOR DUCTS, GREASE REMOVAL DEVICES, HOODS AND COOKING EQUIPMENT.
7. HOOD MANUFACTURER TO VERIFY SIZE OF ALL COOKING EQUIPMENT AND ARRANGE-MENT IN ORDER TO VERIFY OVERALL SIZE AND MAINTAIN 6" OVERHANG.
8. ALL CONTRUCTION SHALL BE IN COMPLIANCE WITH NFPA 96 WITH CONSTRUCTION STAINLESS STEEL TYPE 302-304 #4 FINISH. 18 GA MIN. CONTINUOUSLY WELDED.
9. FURNISH GREASE FILTER HOUSING A LONG FULL LENGTH OF CANOPY AT BACK FURNISH STAINLESS STEEL U.L. LISTED FILTER. INSTALLED ON NOT LESS THAN 45 ANGLE FULL LENGTH. FILTERS TERMINATE AT BOTTOM PITCHED DRIP TRAY.
10. HOOD MANUFACTURER SHALL INSTALL HOOD; MECHANICAL CONTRACTOR TO INSTALL FANS, DUCTS, CURBS. ELECTRICIAN TO PROVIDE ALL POWER. DISCONNECT SWITCH CONTROLS ETC. GENERAL CONTRACTOR TO PROVIDE DRY WALL SHAFT.
11. HOOD PERMIT BY OTHERS. FIRE SUPPRESSION CONTRACTOR DOES NOT CONNECT TO LIFE SAFETY SYSTEMS

HOOD SPECIFICATION (12)

NOT TO SCALE - FOR REFERENCE SEE HOOD SHOP DWG H1

2 / FS6

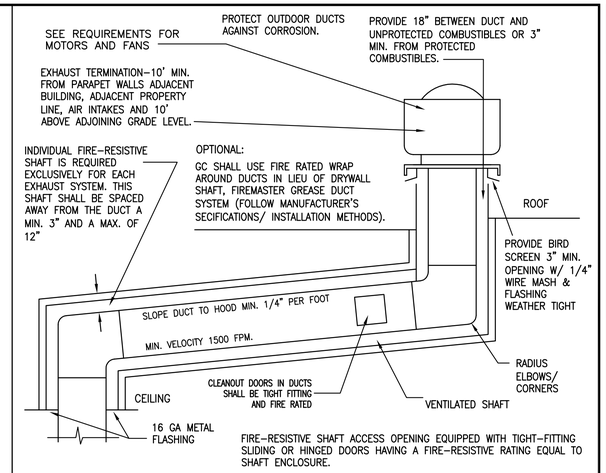

WHEN DUCT LENGTH EXCCEEDS 75 FEET, SLOPE 1" PER FOOT.

GENERAL

1. NO VIBRATION ISOLATION CONNECTORS SHALL BE INSTALLED UNLESS ACCEPTABLE TO DEPARTMENT
2. PROVIDE ADEQUATE CLEANOUT OPENINGS FOR THOROUGH CLEANING OF DUCT SYSTEM.
3. PROVIDE ADEQUATE MAKE-UP AIR FOR PROPER OPERATION. LOCATE 10 FT. MIN. FROM PLUMBING VENTS, EXH. FANS, ETC.
4. PROVIDE A SEPARATE DUCT SYSTEM FOR EACH HOOD.
5. THICKNESS OF DUCTS SHALL BE NO. 16 MANUFACTURER'S STANDARD GAGE STEEL, OR NO. 18 MANUFACTURER'S STANDARD GAGE STAINLESS STEEL.
6. WELD OR BRAZE ALL DUCT JOINTS AND SEAMS ON THE EXTERNAL SURFACE. NO NUTS, BOLTS & RIVETS IN DUCT OR HOOD NO NUTS, BOLTS, RIVETS IN DUCTS OR HOOD.
7. SUPPORT THE DUCTS AS REQUIRED BY CODE. DO NOT PENETRATE DUCT WALLS WITH SCREWS, NAILS, ETC.
8. SECTIONS OF DUCT SHALL NOT CONTAIN GREASE POCKETS.
9. MECHANICAL CONTRACTOR TO PROVIDE AIR AND HOOD BALANCE REPORT FOR BUILDING AND HEALTH DEPT.

EXHAUST SHAFT/DUCT SPECIFICATION FOR REFERENCE (3)

FOR HEALTH DEPT. REFERENCE - SEE MECH. DWG FOR ACTUAL DUCT WORK

3 / FS6

GENERAL SPECIFICATIONS MODEL R-102

FEATURES

* FAST FLAME KNOCK DOWM AND SECUREMENT OF GREASE-RELATED FIRES
* PROVIDES A COOLING EFFECT WHICH FURTHER ENHANCES ITS ABILITY TO PREVENT REFLASH.
* DESIGNED FOR A WIDE VARIETY OF RESTAURANT HAZARDS
* LISTED BY UNDERWRITERS LABORATORIES, INC. (UL) AS PART OF THE R-102 RESTAURANT SYSTEM
* EASE OF RECHARGE AND POST-FIRE CLEANUP

APPLICATION

ANSULEX LIQUID FIRE SUPPRESSANT IS DESIGNED FOR USE ONLY IN ANSUL R-102 RESTAURANT FIRE SUPPRESSION SYSTEMS. THIS "LIQUID" AGENT WILL COMBAT GREASE-RELATED FIRES AS FOUND IN RESTAURANT APPLIANCES AND VENTILATING EQUIPMENT. IT SHOULD NOT BE USED FOR FIRES INVOLVING ENERGIZED ELECTRICAL HAZARDS.

DESCRIPTION

ANSULEX LIQUID FIRE SUPPRESSANT IS A SPECIALLY FORMULATED, AQUEOUS SOLUTION OF POTASSIUM CARBONATE AND POTASSIUM ACETATE. THE AGENT IS PRE-MIXED, ELIMINATING THE NEED FOR DILUTION BEFORE SYSTEM CHARGING. WHEN USED AS AN EXTINGUISHING AGENT, IT WILL PRODUCE NO TOXIC BY-PRODUCTS.

AGENT PROPERTIES

APPEARANCE	COLOR-CODED
STORAGE LIFE	PINK 10 YEARS
REFRACTIVE INDEX.	1.4029
FREEZE POINT	24° F(-31°C)
BOILING POINT	220°F (104°C)
HEAT CAPACITY	66 CAL/GM
SURFACE TENSION	70 DYNES/CM
VAPOR PRESSURE	11.8 MM HG
SPECIFIC GRAVITY	1.44
KINEMATICS VISCOSITY	4.55 CENTISTOKES

WARNING: AS IS THE CASE WITH OTHER PRODUCTS, WHICH ARE ALKALINE IN NATURE, CARE SHOULS BE TAKEN WHEN HANDING THE LIQUID. IF CONTACT IS MADE WITH THE EYES OR SKIN, FLUSH WITH WATER. IF THE AGENT IS SWALLOWED, DILUTE WITH WATER OR MILK AND CONTACT A PHYSICIAN. PERFORMANCE.

WHEN USED IN THE ANSUL R-102 RESTAURANT SYSTEM, ANSULEX LIQUID AGENT IS EXTREMELY EFFECTIVE ON FIRES IN RESTAURANT VENTILATING EQUIPMENT - HOODS AND DUCTWORK, AS WELL AS IN A VARIETY OF COOKING APPLIANCES - DEEP - FAT FRYERS, GRIDDLES, RANGE TOPS, AND SEVERAL TYPES OF BROILERS AND CHAR-BROILERS.

AS THE AGENT IS SPRAYED IN FINE DROPLETS (ATOMIZED) ONTO AN APPLIANCE GREASE FIRE, IT PROVIDES EXCELLANT FLAME KNOCKDOWN, SURFACE-COOLING, AND FIRE-SECURING CAPABILITIES. WHEN THE AGENT REACTS WITH THE HOT GREASE, IT FORMS A LAYER OF FOAM ON THE SURFACE OF THE FAT. THIS SOAP-LIKE BLANKET OF FOAM ACTS AS AN INSULATOR BETWEEN THE HOT GREASE AND THE ATMOSPHERE, HELPING TO PREVENT FLAMMOBLE VAPORS FROM ESCAPING AND REDUCING THE CHANCE FOR FLAME REIGNITION.

POST-FIRE CLEANUP CAN BE READILY ACCOMPLISHED BY FLUSHING THE AREA WITH WATER OR STEAM. BECAUSE OF THE COMPOSITION OF ANSULEX LIQUID FIRE SUPPRESSANT, FLUSHING OF THE AGENT DISTRIBUTION PIPING IS NOT REQUIRED WHEN PROPER PIPING IS USED. SEE CORROSION CHART BELOW:

METAL	AGENT EFFECTS
STAINLESS STEEL*	DOES NOT ATTACK
BLACK IRON PIPE*	DOES NOT ATTACK, CLEANS SURFACES
BRASS	WILL STAIN WITH PRO-LONGED CONTACT
COPPER	WILL STAIN WITH PRO-LONGED CONTACT
ALUMINUM	ATTACKS
GALVANIZED PIPE	ATTACKS GALVANIZED COATING

ACCEPTABLE DISTRIBUTION PIPIING; ALSO CHROME-PLATED.

* APPROVALS AND LISTINGS

ANSULEX LIQUID FIRE SUPPRESSANT HAS BEEN TESTED, AND IS LISTED WITH UNDERWRITERS LABORATORIES, INC. (EX-3470) AS PART OF THE ANSUL R-102 RESTAURANT FIRE SUPPRESSION SYSTEM.

ORDERING INFORMATION

ANSULEX LIQUID FIRE SUPPRESSANT IS AVAILABLE IN THREE GALLON (11.4L) SEALED CONTAINERS UNDER PART NO. 57670. RECHARGE SERVICES ARE AVAILABLE FROM AUTHORIZED ANSUL DISTRIBUTORS.

ANSUL IS A REGISTERED TRADEMARK AND ANSULEX IS A TRADEMSRK.

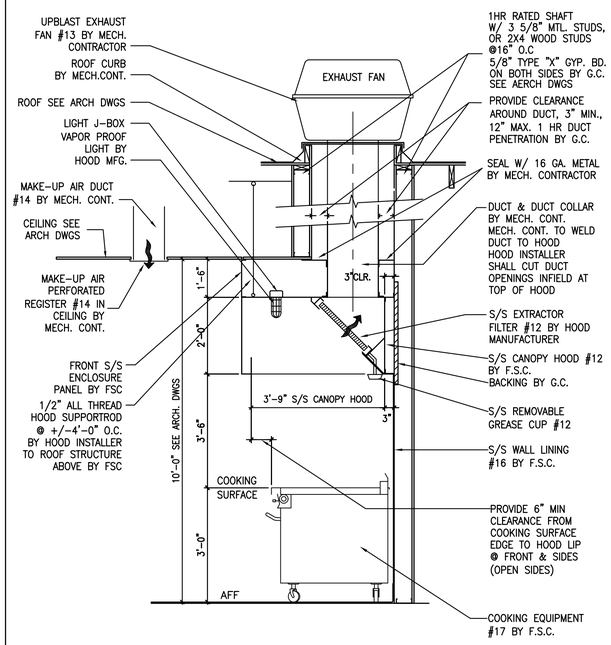

NOTE:
HOOD DESIGN REQUIRES AJACENT CEILING REGISTERS IN CEILING FOR MAKE UP AIR.
MECH. CONTRACTOR TO SIZE, LOCATE REGISTERS FOR DRAFT FREE & EVEN DISTRIBUTION.

HOOD SECTION (12)

4 / FS6

HOOD INFORMATION	ITEM NO./HOOD TYPE	(12) CANOPY TYPE I HOOD, UL LISTED CAPTIVEAIRE 4824 ND2
	HOOD DIMENSION	SIZE = 4'-0" X 6'-0" OPEN AREA = 3'-9" X 6'-0"
	DISTANCE BETWEEN HOOD AND COOKING SURFACE	3'-6"
	HOOD EXTENSION OVER COOKING SURFACE	FRONT: 10" LEFT: 6" RIGHT: 6" BACK: 3" AIR SPACE (WALL)
	EXHAUST CFM FORMULA	UL listed 200 cfm per foot, DESIGN 240 CFM Q= 6' X 240 = 1440 CFM
EXHAUST AIR REQUIREMENTS	CFM VOLUMNE	1440 CFM
	EXHAUST AIR VELOCITY	1571 FPM
	MFR. / MODEL NO. EXHAUST FAN	(13) SEE MECHANICAL DWGS CUBE-161XP-15
	HOOD COLLAR	11" X 12" = 132 SQ IN = 0.92 SQ FT
	QTY./TYPE HOOD FILTERS	S/S REMOVABLE BAFFLE FILTER 2 - 16 X 16 @ 1.35 SQ FT EA 2 - 16 X 20 @ 1.73 SQ FT EA
SUPPLY AIR REQUIREMENTS	CFM VOLUMNE (95-100% OF EXHAUST)	1296 TO 1440 CFM
	SUPPLY REGISTER TYPE / LOCATION	MIN ONE REGISTERS AT CEILING
	MFR. / MODEL NO.	(14) SEE MECHICAL DWGS CHAMPION 3000DD

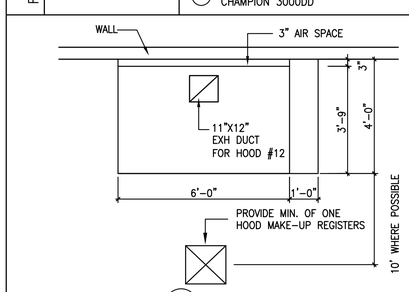

HOOD PLAN (12)

3/8"=1'-0"

5 / FS6

DESIGNERS AND SUPPLIERS OF EQUIPMENT AND INTERIORS FOR HOTELS, RESTAURANTS AND INSTITUTIONS

THIS DOCUMENT WITH THE IDEAS AND COMPUTER DATA INCORPORATED HEREIN, AS AN INSTRUMENT OF PROFESSIONAL SERVICE, IS THE PROPERTY OF EAST BAY RESTAURANT SUPPLY, INC. IT MAY NOT BE USED OR COPIED IN WHOLE OR IN PART FOR ANY MANNER WITHOUT THE EXPRESS WRITTEN AUTHORIZATION OF EAST BAY RESTAURANT SUPPLY, INC.

EAST BAY since 1934
RESTAURANT SUPPLY, INC.
Kitchen Design Consultants
49 FOURTH STREET OAKLAND, CA. 94607 (510) 465-4300 FAX (510) 465-3221

CONTENT: HOOD DATA, FIRE SUPPRESSION SYSTEM
PROJECT: Veterans Community

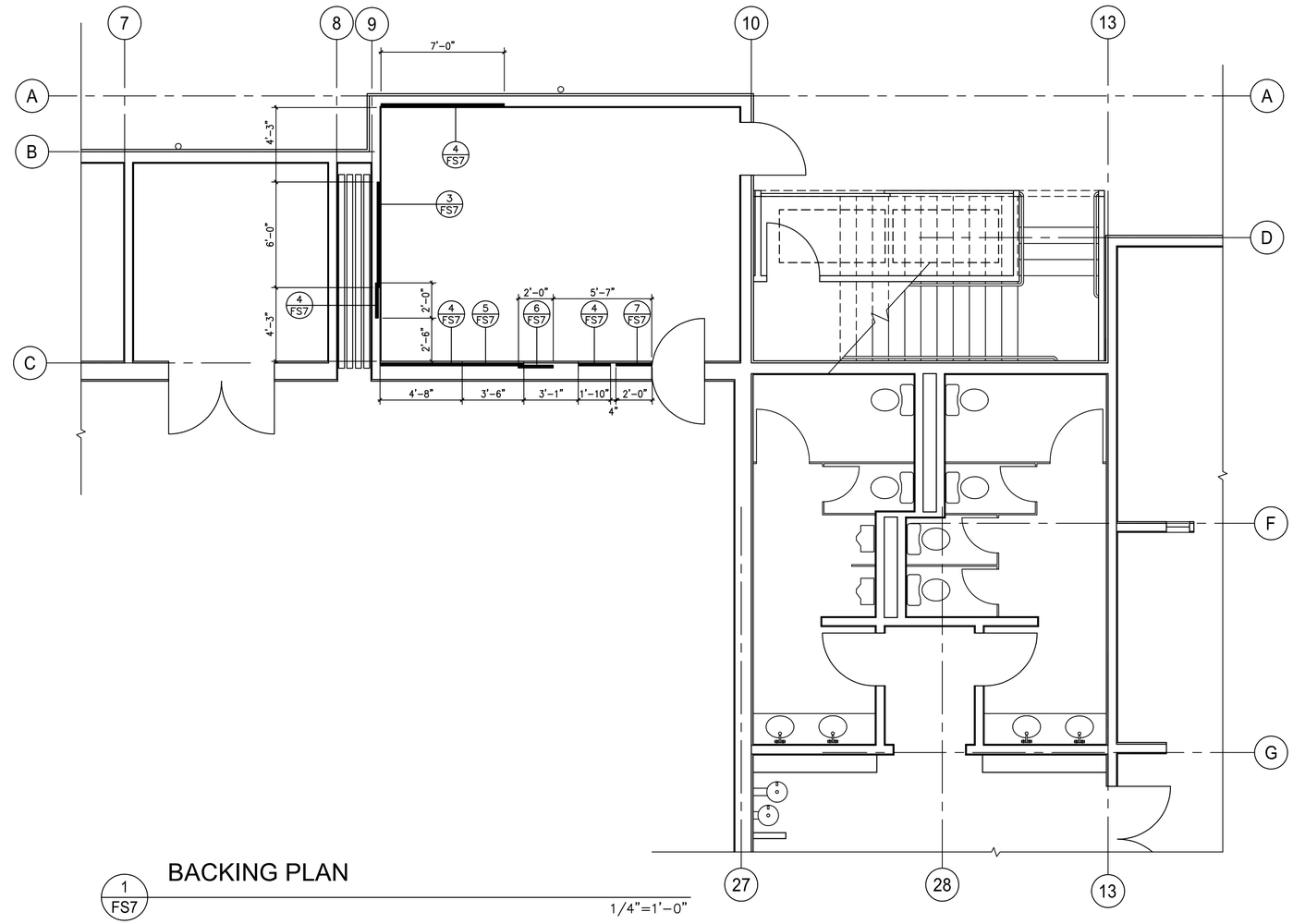

1 FS7 BACKING PLAN

1/4"=1'-0"

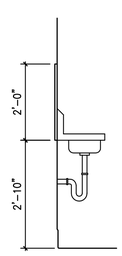

7 FS7 HAND SINK BACKING

1/2" = 1'-0"

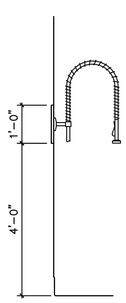

6 FS7 PRE-RINSE FAUCET

1/2" = 1'-0"

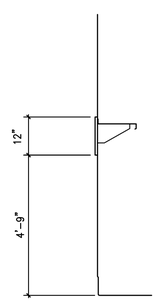

5 FS7 SINGLE SHELF BACKING

1/2" = 1'-0"

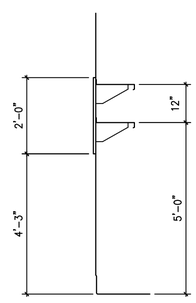

4 FS7 DOUBLE SHELF BACKING

1/2" = 1'-0"

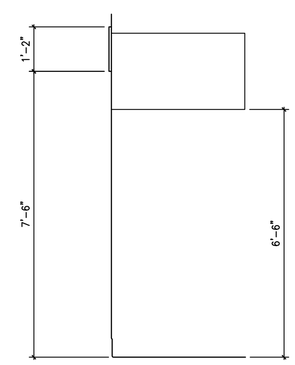

3 FS7 HOOD BACKING

1/2" = 1'-0"

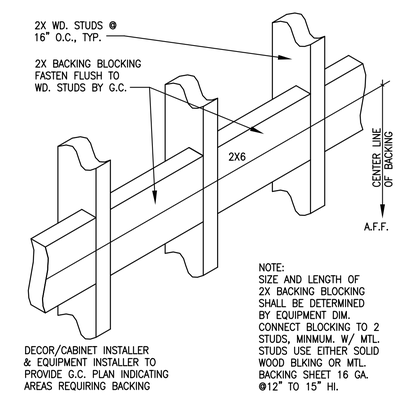

2 FS7 EQUIPMENT BLOCKING

1 1/2" = 1'-0"

Plot Date: Jun 22, 10

DESIGNERS AND SUPPLIERS OF EQUIPMENT AND INTERIORS FOR HOTELS, RESTAURANTS AND INSTITUTIONS

THIS DOCUMENT, WITH THE IDEAS AND COMPUTER DATA INCORPORATED HEREIN, AS AN INSTRUMENT OF PROFESSIONAL SERVICE, IS THE PROPERTY OF EAST BAY RESTAURANT SUPPLY, INC. AND IS NOT TO BE USED OR COPIED IN WHOLE OR IN PART FOR ANY MANNER WITHOUT THE EXPRESS WRITTEN AUTHORIZATION OF EAST BAY RESTAURANT SUPPLY, INC.

East Bay RESTAURANT SUPPLY, INC. since 1934
Kitchen Design Consultants
49 FOURTH STREET OAKLAND, CA. 94607 (510) 465-4300 FAX (510) 465-3201

CONTENT: BACKING PLAN/ DETAILS

PROJECT: Veterans Community Kitchen

LOCATION: 400 Hartz Ave Danville, CA 94526

NO.	REVISION	DATE:

PROJECT COORDINATOR: LARRY LA GRAVE

DRAWN BY: TQ

CHECKED BY: JOE RUK

SCALE: SEE DRAWING

DATE: ISSUE FOR CONSTRUCTION JUNE/25/2010

JOB NO.: 5052

SHEET NO.: FS7

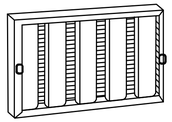

Kleen-Gard Baffle Type Filters are UL Classified Grease Extracting Filters.
MEA # 168-78-M Aluminum
MEA # 247-96-E Stainless

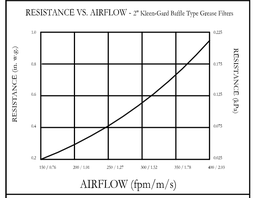

Filter Detail

RESEARCH PRODUCTS CORPORATION

EXHAUST CFM=LENGTH OF HOOD X CFM/LIN.FT. (LOAD)

SUPPLY CFM=EXHAUST CFM X PERCENTAGE REQUIRED

TOTAL DUCT AREA=144 X $\frac{\text{CFM}}{\text{FPM(*)}}$

DUCT LENGTH= $\frac{\text{TOTAL DUCT AREA}}{\text{DUCT DEPTH}}$

* CAPTIVE-AIRE VENTILATOR DUCT SIZES ARE CALCULATED USING AN EXHAUST VELOCITY OF 1500-1900 FPM AND A SUPPLY VELOCITY OF 1000 FPM PLEASE CONSULT FACTORY FOR MAXIMUM ALLOWABLE DUCT SIZES

CALCULATIONS UTILIZED

CAPTIVE-AIRE HOODS ARE BUILT IN COMPLIANCE WITH:

- NFPA #96
- NSF
- B.O.C.A. #93-16
- LC.B.O. 34416
- SBCCI PST & ESI NO. 93137
- ETL Listed
- LOS ANGELES RR#8080

BUILDING CODES

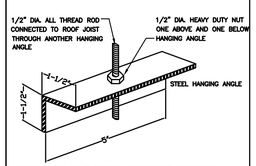

* ROD AND NUTS TO BE SUPPLIED BY INSTALLING CONTRACTOR HANGING ANGLE IS PRE-PUNCHED AT FACTORY

ND HANGING ANGLE DETAIL

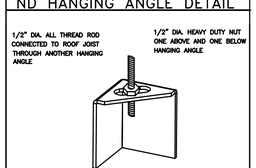

* ROD AND NUTS TO BE SUPPLIED BY INSTALLING CONTRACTOR HANGING ANGLE IS PRE-PUNCHED AT FACTORY

ND-2 HANGING ANGLE DETAIL

HANGING ANGLES WILL BE LOCATED IN THE FOLLOWING LOCATIONS FOR WALL CANOPIES

HOOD STYLE	DIM FROM REAR	DIM FROM FRONT (24" High Hood)	DIM FROM SIDES (24" High Hood)
ND-2 Exhaust only	4.125"	2.25"	2.25"
ND With standoff	1.75"	1.75"	6.00"
ND Without standoff		4.75"	6.00"
Condensate	10.50"	10.50"	

HANGING ANGLE LOCATIONS

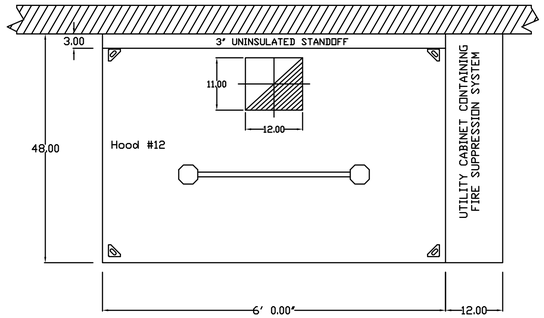

PLAN VIEW - Hood #12 - 6' 0.00" LONG 4824ND-2

NOTE: MODEL ND-2 IS A ETL LISTED TYPE 1 HOOD
ETL LISTING IS 200 CFM/FT (600 DEGREES)
Q=ETL LISTING * 6' 0"=1200 CFM<1440 CFM (DESIGN)
MODEL ND IS ETL LISTED WITH 1 EX RISER UP TO 16'

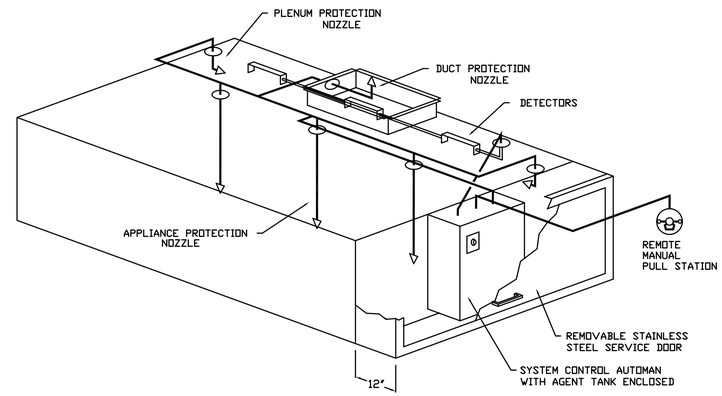

TYPICAL ANSUL R102 SYSTEM LAYOUT #15

FSC TO SUBMIT SHOP DRAWINGS AND A PERMIT APPLICATION TO THE FIRE DEPARTMENT FOR APPROVAL BY SRFPD PRIOR TO INSTALLATION.

FOR QUESTIONS, CALL THE
NORTHERN CALIFORNIA CORPORATE OFFICE
3746 MT DIABLO BLVD, LAFAYETTE, CA 94549
PHONE: (925) 962-1999, (800) 610-3456
FAX: (925) 962-1998

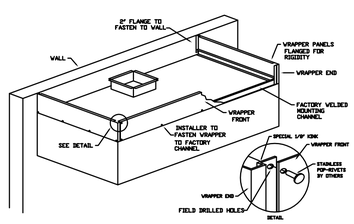

FIELD WRAPPER

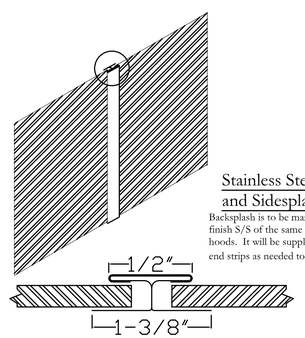

Stainless Steel Backsplash and Sidesplash #16

Backsplash is to be manufactured from #3 or #4 finish S/S of the same guage and material as the hoods. It will be supplied with Batton strips and end strips as needed to close all seams and edges.

Batton Strip Detail

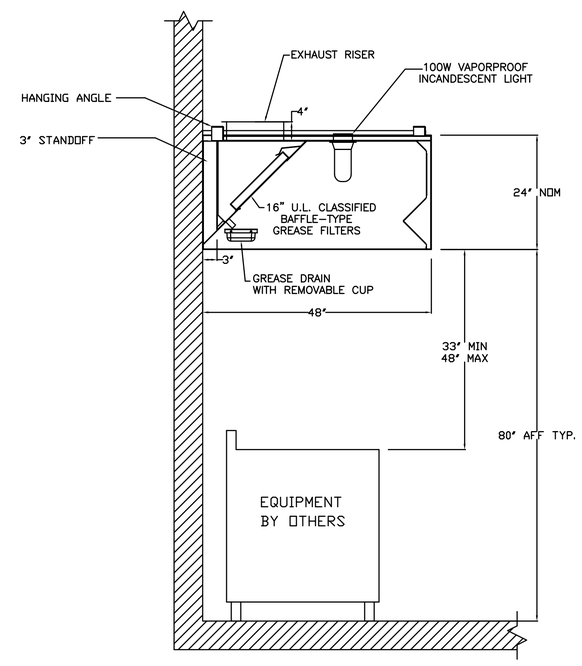

SECTION VIEW - MODEL 4824-ND-2

HOOD INFORMATION

HOOD NO.	MODEL	LENGTH	MAX. COOKING TEMP.	EXHAUST PLENUM						SUPPLY PLENUM						HOOD CONSTRUCTION	HOOD CONFIG.	
				TOTAL EXH. CFM	RISER(S)					TOTAL SUP. CFM	RISER(S)						END TO END	ROW
					WIDTH	LENG.	DIA.	CFM	S.P.		WIDTH	LENG.	DIA.	CFM	S.P.			
12	4824 ND-2	6' 0.00"	600 Deg.	1440	11"	12"		1440	-0.431"	0						430 SS Where Exposed	ALONE	N/A

HOOD INFORMATION

HOOD NO.	FILTER(S)				LIGHT(S)			UTILITY CABINET(S)						FIRE SYSTEM PIPING	HOOD WEIGHT
	TYPE	QTY.	HEIGHT	LENGTH	QTY.	TYPE	WIRE GUARD	LOCATION	FIRE SYSTEM		ELECTRICAL	SWITCHES			
									TYPE	SIZE	MODEL #	QUANTITY	LOCATION		
12	SS Baffle with Handles	2	16"	16"	2	Incandescent Light Fix	NO	Right						NO	419 LBS.
		2	16"	20"											

ISSUE FOR CONSTRUCTION 6/25/10

CAPTIVEAIRE

JOB	Veterans Building		
LOCATION	Danville, CA		
DATE	11/23/2009	JOB #	5052-1060738
DWG #	180 OF 186	DRAWN BY	AJ
REV.	SHEET H1	SCALE	3/4"