P CUBE

Power Pedal Pro

An Affordable Electric Bicycle Conversion Kit

Ayushman Sahoo
A Personal Engineering Project
Based on Hands-On Innovation and Sustainable Technology

₹7,000 – 8,500	250W / 24V	45 km/h
Total Project Cost	Motor Power	Hybrid Speed

1. Introduction

The P Cube - Power Pedal Pro (PPP) is an innovative electric bicycle conversion kit designed to transform traditional bicycles into powerful, electrically assisted modes of transportation. This project emerged from a personal need to create an affordable alternative to expensive ready-made electric bicycle conversion kits available in the market.

This documentation serves as a comprehensive technical portfolio showcasing the entire journey of the P Cube project—from initial conception during a summer break, through hands-on development and real-world testing over two years, to the final refined product. It highlights the engineering challenges faced, creative problem-solving approaches, and the iterative design process that led to a working prototype.

The project demonstrates practical application of mechanical engineering principles, electrical systems design, and sustainable innovation through the use of recycled materials. Rather than purchasing a complete kit, every component was carefully selected, sourced, and integrated through a combination of hands-on assembly and professional fabrication processes.

2. Background Story

2.1 The Motivation Behind the Idea

The story of the P Cube project began in 9th grade when my family shifted to a house approximately two kilometers away from my school. For the first year and a half, I commuted by walking to school, sometimes running, and occasionally borrowing friends' bicycles when available. This experience highlighted the challenge of daily commuting in an urban environment and the value of personal transportation.

When I entered 10th grade, my mother purchased a simple, thin bicycle for me. I used this bicycle regularly to commute to school, which solved the immediate transportation problem. However, the physical exertion required for the 2 km journey, especially on days with adverse weather or when feeling unwell, remained a concern.

After completing my 10th grade board exams, I had a gap of approximately one and a half months before 11th grade commenced. During this time, rather than remaining idle, I decided to undertake a meaningful project. The idea of converting my bicycle into an electric-assisted vehicle seemed ideal—it would combine practical utility with hands-on learning.

2.2 Initial Research and Realization

When I began researching electric bicycle conversion kits available in the market, I discovered a significant barrier: cost. Even the most basic conversion kits were priced between ₹12,000 and ₹15,000. These kits often lacked essential components such as batteries, chargers, and protective covers, leading to substantial hidden costs when fully assembling a functional system.

In contrast, fully built electric bicycles were priced upwards of ₹30,000, making them inaccessible to students and low-income users. This pricing gap presented an opportunity: instead of purchasing a ready-made kit, I could source individual components and assemble them myself, potentially achieving both a working electric bicycle and significant cost savings.

2.3 Conceptual Development and Planning

To develop this idea further, I discussed the concept with my elder brother, who was studying in college at the time. Through WhatsApp conversations, we discussed fundamental design aspects: how the motor would be mounted, how the battery would be positioned and secured, how power transmission would work, and how the overall system architecture would be organized. My brother's input provided valuable perspective on mechanical design principles.

I spent considerable time researching different motor types, battery configurations, and mounting mechanisms. I compared specifications and prices of components available both online and offline, creating a comprehensive parts list and cost estimate. This research phase took several weeks, as reliable information required cross-referencing multiple sources.

Sourcing all components individually was time-consuming. Components were ordered from different vendors—some from online retailers and others from local shops—each with varying lead times and availability. The process of collecting all parts before assembly began took several months.

3. Problem Statement

In India, daily commuting remains a significant challenge for millions, particularly for students, daily wage workers, farmers, and security personnel. The inability to afford conventional motorized transportation—such as motorcycles or scooters—creates a transportation bottleneck for those with limited financial resources.

Traditional bicycles serve as the primary mode of personal transportation for many in this demographic. However, limitations in range, speed, and physical effort required create barriers to their wider adoption, especially for longer commutes or challenging terrain.

Electric bicycles present an attractive solution, combining affordability with efficiency and sustainability. However, the existing market exhibits two problematic extremes:

- Cheap conversion kits (₹8,000–₹15,000) lack essential components, creating hidden costs for batteries, chargers, and covers
- Fully assembled electric bicycles cost ₹30,000+, placing them beyond the financial reach of target users
- Available conversion kits often exclude weather-protective elements, reducing durability in India's varied climate
- Many users lack the knowledge or resources to assemble kits from scattered components

The P Cube – Power Pedal Pro addresses this market gap by providing a comprehensive, affordable conversion kit that includes all necessary components, is made from recycled materials, and offers complete functionality at a price point (₹7,000) below most competitors while maintaining superior feature inclusion.

4. Project Overview

4.1 Project Objectives

- Develop an affordable electric bicycle conversion kit priced at ₹7,000, including all essential components
- Demonstrate sustainable engineering through the use of recycled materials from discarded electronics and vehicles
- Create a seamless integration system that transforms traditional bicycles without aesthetic or functional compromise
- Achieve reliable performance through hands-on testing over an extended period (2+ years)
- Provide a complete solution with integrated safety features, protective covers, and user-friendly controls

4.2 Key Features

Feature	Description
Affordability	Complete kit at ₹7,000, eliminating hidden costs associated with competing products
Environmental Sustainability	Utilizes recycled materials including UPS batteries, truck lighting, and repurposed mechanical components
Seamless Integration	Designed specifically for standard bicycle frames without permanent modifications
Dual-Mode Operation	Supports pedal-only, motor-only, and hybrid (pedal + motor) operation simultaneously
User-Friendly Interface	Intuitive throttle control with battery monitoring via voltmeter display
Enhanced Safety	24W headlight for low-light visibility, key-lock security system, and waterproof electronics enclosure
Weather Protection	Integrated protective cover for all electrical components, extending lifespan in varying weather conditions
Universal Charging	Standard 220V outlet charging using universal Philips connector, avoiding proprietary systems

5. Design and Components

5.1 System Architecture

The P Cube system consists of several integrated subsystems that work in harmony to deliver electric-assisted transportation:

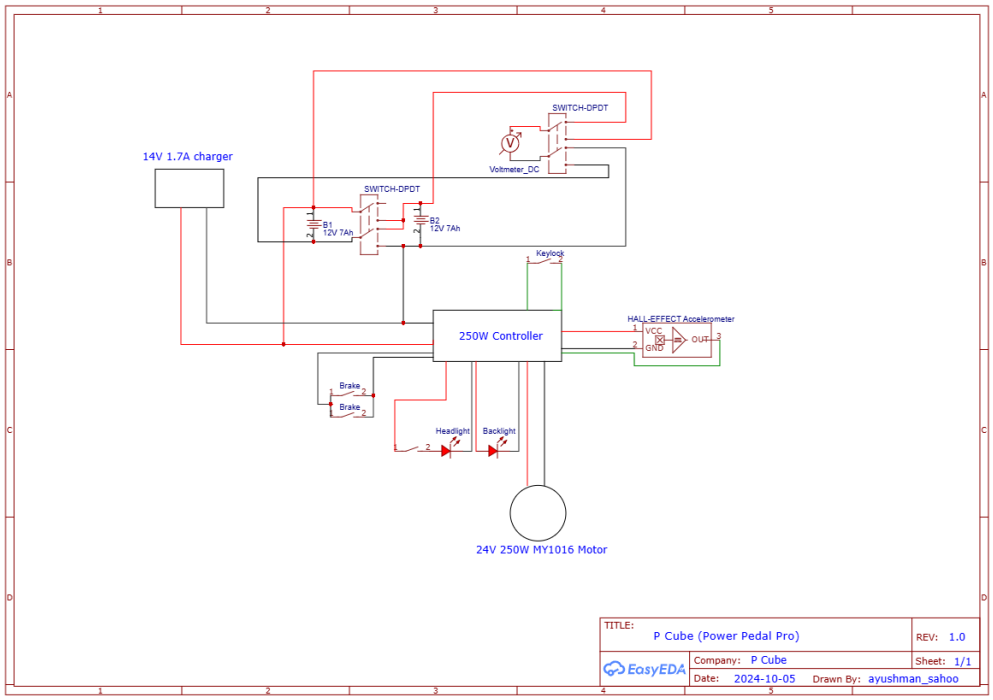

Figure 1 – P Cube System Architecture Overview

- Motor and Power Transmission System: Converts electrical energy into mechanical motion through a geared motor arrangement
- Energy Storage System: Sealed lead-acid batteries configured to provide 24V power
- Control and Monitoring System: Speed throttle, voltage monitoring, and hybrid mode functionality
- Lighting and Safety System: Headlight, brake light, and key-lock security
- Support Structure: Mechanical mounting framework and protective enclosures

5.2 Component Sourcing Philosophy

Rather than manufacturing components from raw materials, the P Cube project emphasizes a sustainable approach through:

- Recycled Materials: Components salvaged from discarded electronics and vehicles
- Cost Optimization: Comparison shopping across online and offline vendors
- Quality Verification: Testing compatibility and durability before assembly
- Minimal Waste: Reusing functional components instead of purchasing new alternatives

5.3 ATL Tools and Resources

The Atal Tinkering Lab (ATL) at school provided critical resources that would otherwise have been inaccessible for a student-led project. Access to ATL tools and components significantly reduced the cost of fabrication and enabled precision work that home tools could not achieve.

Tools Used from ATL: Drill, saw, soldering iron, heat gun

Components Sourced from ATL: Screws, switches, LEDs, resistors, capacitors, and electrical connectors

The soldering iron and heat gun from ATL were particularly valuable for assembling and weatherproofing the electrical system. The drill enabled precise mounting holes in the aluminium bracket, and the saw was used for cutting and shaping structural components. ATL components such as switches and connectors were used in the control panel and wiring harness, further keeping costs within the project's budget.

6. Hardware Specifications

6.1 Motor and Power Transmission

Specification	Value
Motor Type	MY1016 Brushed DC Motor
Rated Power	250W
Voltage	24V
Sprocket Size	88-tooth sprocket
Gear Ratio	1:8
Mechanical Advantage	8×
Torque Multiplication	Base 0.8 Nm → 6.4 Nm effective
RPM Characteristic	High RPM motor suitable for bicycle speeds

The motor selection was critical. A high-RPM, low-torque motor was deliberately chosen because the gearing system (sprocket-freewheel arrangement) provides the necessary mechanical advantage. This approach offers several advantages over direct-drive systems:

- Better efficiency at low speeds
- Reduced mechanical stress on components
- Compatibility with standard bicycle chain systems
- Cost reduction through use of proven automotive components

6.2 Power Storage

Specification	Value
Battery Type	Sealed Lead-Acid (SLA) – UPS Type
Configuration	Two batteries in series
Voltage per Battery	12V
Total System Voltage	24V
Capacity per Battery	~7 Ah
Source	Recycled from discarded computer UPS systems
Advantages	Maintenance-free, readily available, cost-effective

Note: The initial plan to use lithium-ion batteries was abandoned due to cost considerations. Sealed lead-acid batteries from old UPS systems provide a sustainable alternative at minimal cost. While heavier than lithium batteries, they are proven, safe, and widely available from e-waste sources.

6.3 Control System

Specification	Value
Throttle Type	23mm handlebar-mounted throttle
Speed Control	Variable throttle for gradual acceleration
Charge Config (Operation)	Two batteries in series (24V)
Charge Config (Charging)	Two batteries in parallel (12V)
Series-to-Parallel Switching	Custom designed using plug socket arrangement
Monitoring	DC voltmeter for real-time battery level display

6.4 Lighting and Safety

Specification	Value
Headlight	24W truck-sourced LED (recycled)
Brake Light	2.4W truck-sourced LED (recycled)
Light Source	Salvaged from decommissioned trucks
Power Supply	Connected to 12V battery tap (for lower power consumption)
Visibility Range	Sufficient for night riding in urban environments

6.5 Security and Convenience

Feature	Detail
Security System	Key-lock switch mechanism
Function	Turns off all power when engaged, preventing unauthorized operation
Safety Advantage	Meets transport safety requirements for electric vehicles
Maintenance	Reliable mechanical switch with no electronic failure points

6.6 Electrical Protection

All electrical components are housed in a waterproof acrylic protective enclosure with rubber sealing. The enclosure is mounted to the bicycle frame and protects the controller, switching mechanism, and power distribution components from:

- Water damage from rain or washing
- Dust and debris accumulation
- Mechanical impact and vibration
- UV degradation from prolonged sunlight exposure

7. Technical Challenges and Solutions

The development process was not straightforward. Several significant engineering challenges emerged during construction, each requiring creative problem-solving and iterative refinement.

7.1 Challenge: Sprocket-Hub Assembly and Loosening

Problem

A standard bicycle hub has threads only on the right side (pedal side). To utilize the empty left side for the motor sprocket, a double-threaded hub was sourced. However, the left-side thread is a reverse thread—a critical detail that causes the sprocket to loosen rather than tighten as the wheel rotates forward.

Solution Attempts

- Attempt #1 – Washers: Added metal washers to prevent loosening. Result: Failed completely.
- Attempt #2 – Welding: Considered welding the sprocket to the hub. Rejected due to risk of bearing damage from heat.

Final Solution

Used two-part Araldite epoxy adhesive to create a chemical bond between the hub and freewheel. Creates near-weld-strength bond without heat damage, remains removable for future maintenance, and cost only ₹100–200. Result: Intact and reliable after 2+ years of operation.

7.2 Challenge: Sprocket-Freewheel Misalignment and Welding Failure

After securing the freewheel to the hub with epoxy, the sprocket's central hole was slightly smaller than the freewheel's outer diameter, preventing direct assembly. The sprocket was taken to a lathe workshop where the central hole was precisely enlarged.

Critical issue: The welder was operating impaired, creating uneven welds with severe wobbling and runout. The assembly had to be completely dismantled, defective welds cut and removed, components re-aligned, and a second welding attempt made successfully.

7.3 Challenge: Spoke Melting During Welding

Welding heat inadvertently contacted one of the installed spokes, melting it. This required complete wheel disassembly and replacement of the damaged spoke.

Lesson: Due to this failure and thermal risks, the decision was made to minimize welding. The sprocket is now attached to the hub using Araldite epoxy, with only four minimal tack welds—keeping heat exposure minimal.

7.4 Challenge: High-Current DC Switching

The system required switching between series (24V operation) and parallel (12V charging) battery configurations. High-current DPDT switches rated for 15–20A were priced at ₹1,000–₹2,000. A purchased switch also had a delicate pin that broke during soldering.

Creative Solution

Developed a plug socket configuration using 2-pin female plug sockets (~₹15–20 total) with thick DC power cables as contact elements. Manual reconfiguration by removing/reinserting cables changes the battery configuration.

Attribute	DPDT Switch vs. Plug Socket Solution
Cost	₹1,000–₹2,000 vs. ₹20–30
Reliability	Single-point failure vs. Proven over 2 years
Elegance	Single toggle vs. Manual reconfiguration
Current Handling	Rated vs. Adequate for system load

7.5 Challenge: Motor Mounting and Slip Prevention

A sandwich-style clamping mechanism using two soft iron plates was used, but the motor slipped during high-torque conditions due to insufficient friction between metal-to-metal surfaces.

Solution: Inserted strips of old bicycle tube rubber between the mounting bracket and frame. This increased friction, added vibration dampening, reduced noise, and protected the frame from corrosion — at essentially zero cost (recycled material). Motor slipping was completely eliminated.

8. Design Evolution and Improvements

The P Cube has not remained static since initial construction. Over approximately two years of active use, several components failed or degraded, leading to design iterations and improvements.

8.1 Lighting System Evolution

Original Design: 4–5 LEDs connected in series. Problem: If a single LED fails, the entire series circuit breaks. This occurred after limited use.

Replacement Solution: Switched to truck side-marker LEDs (24W headlight and 2.4W brake light), salvaged from decommissioned trucks at ₹20 each, configured in parallel.

- Significantly brighter output suitable for night riding
- Proven reliability over extended use
- Salvaged from e-waste, supporting sustainability goals
- Multiple internal emitters provide some redundancy
- Connected to 12V tap (rather than full 24V) for extended life

8.2 Chain Tensioning System

The dual-sprocket arrangement created a mechanical coupling problem: tightening the pedal-side chain would loosen the motor-side chain, and vice versa. No static tightening solution worked.

Custom Tensioner Design

- PVC electrical conduit pipe as the support structure
- Used ball bearing (sourced from motorcycle repair shop) as the contact point
- Mounted to frame using hose clamps for adjustable tension

The tensioner bearing maintains constant tension on the slack side of the chain, accommodating both the pedal chain and motor chain variations simultaneously. This is one of the most important design refinements.

8.3 Discovery of Hybrid Operation Mode

Important Finding: Initially assumed simultaneous pedaling and motor operation would stress the system. After 1–2 weeks of testing, discovered both can operate simultaneously without adverse effects. Hybrid mode (pedal + throttle) provides torque assist, significantly improved acceleration, better climbing performance, extended range, and enhanced urban riding safety.

8.4 Battery Selection Refinement

Original Plan: 24V lithium-ion battery pack for superior energy density. Constraint: Appropriate lithium packs with BMS exceeded ₹3,000–4,000, consuming a disproportionate share of the ₹7,000 budget.

Decision: Switched to sealed lead-acid batteries salvaged from old UPS systems. Cost often free to ₹500 per battery. No special BMS required. Inherent thermal management with no runaway risk.

Learning: Two batteries had to be replaced after two years due to deep discharge damage—highlighting the importance of charging discipline with lead-acid batteries.

9. Performance Metrics

After approximately two years of consistent use, including daily commuting, the P Cube has demonstrated reliable performance. The following metrics were measured under controlled conditions.

9.1 Speed Performance

Mode	Maximum Speed
Pedal Only (No Motor)	~23 km/h (depends on rider fitness)
Motor Only (No Pedaling)	~25 km/h (limited by motor RPM and gearing)
Hybrid Mode (Pedal + Motor)	~45 km/h (combined torque boost)

Note: The 45 km/h hybrid mode speed represents the theoretical maximum under ideal conditions. In practice, this speed is rarely used due to safety considerations and bicycle braking limitations.

9.2 Climbing and Acceleration Performance

When riding with friends on standard bicycles, the P Cube consistently outperformed conventional bicycles even when operating the motor at only 10–20% power. The mechanical advantage provided by the 1:8 gear ratio enables climbing steep inclines with relative ease. Motor torque multiplication (0.8 Nm base to 6.4 Nm effective) provides sufficient force for most urban topography.

9.3 Range and Endurance

Mode	Approximate Range
Motor Only (24V, 7Ah battery)	7–10 km at moderate throttle
Hybrid Mode (Pedal + Motor)	15+ km (human power supplements battery)

Range varies with terrain, throttle level, battery age, and rider load.

9.4 Reliability Observations

- Motor operation: Continuous and reliable with no mechanical failures
- Power transmission: Gearing and chain system stable after initial tensioning
- Frame and structure: No fatigue cracks or structural degradation
- Mounting system: Remained secure throughout the two-year testing period

9.5 Control Responsiveness

The handlebar-mounted throttle provides smooth, proportional speed control. Acceleration is responsive and smooth, enabling precise maneuvering in urban environments. The freewheel

design prevents motor back-drive when pedaling, which simplifies the system design but foregoes regenerative braking.

10. Safety and Durability

10.1 Electrical Safety

The system operates at 24V DC, which presents minimal electrical safety hazards. This voltage level is:

- Below human body electrocution thresholds
- Commonly used in RVs, boats, and solar systems
- Intrinsically safe for wet environments
- Capable of being handled directly without risk in emergency situations

10.2 Weather Protection

All electrical components are housed in an acrylic protective case with rubber sealing. The bicycle has been left parked outdoors at school in various weather conditions and has been washed with water multiple times. The electrical system has never experienced failures related to water exposure or corrosion.

10.3 Mechanical Durability

- Steel sprocket and freewheel withstand high torque
- Sealed ball bearings resist corrosion
- Recycled rubber provides vibration isolation
- Epoxy bonding maintains component integrity

10.4 Safety Features

Key-Lock Security provides immediate power cutoff when key is removed, prevention of unauthorized operation, no complex electronics to fail, and compliance with transport safety standards.

Braking System: The electric bicycle retains the original bicycle braking system. Because the motor is not regenerative, it does not interfere with braking. Brake performance remains identical to the original bicycle.

10.5 Thermal Management

The 250W motor generates moderate heat during operation. The bicycle's natural movement provides passive cooling through air circulation. Sealed lead-acid batteries have built-in thermal management and will not enter thermal runaway conditions during normal charging—a significant safety advantage over lithium systems.

11. Component Failures and Lessons Learned

Despite careful design, several components failed over the two-year testing period. Each failure provided valuable insights into system reliability and component selection.

11.1 LED Headlight Failure

Issue: Initial LED headlight (4–5 LEDs in series) failed when a single LED burned out, breaking the entire circuit

Root Cause: Series-connected LEDs create a single point of failure

Solution: Replaced with truck side-marker LEDs (parallel connected with appropriate current limiting)

Learning: Always design lighting systems with redundancy — parallel connections with individual protection are superior

11.2 Brake Light Switch Failure (Multiple Instances)

Issue: Brake light switch failed multiple times over the two-year period

Root Cause: Vibration from pedaling and motor operation caused solder joints to crack

Fix: Resoldered connections; protective epoxy potting later applied to reduce vibration fatigue

Learning: Sensitive electrical components need mechanical support, vibration-dampening mounts, and conformal coating

11.3 Accelerator Throttle Replacement

Issue: Original 23mm handlebar throttle failed after ~2 years

Failure Mode: Internal potentiometer became unreliable, causing jerky power delivery

Solution: Replaced with identical new throttle unit (cost: ~₹250)

Learning: Electronic throttle life is limited; plan for periodic replacement

11.4 Battery Replacement Due to Deep Discharge

Critical Issue: One 12V lead-acid battery had to be replaced after two years due to deep discharge damage. Lead-acid batteries require disciplined charging practices: charge after each use before dropping below 50% capacity, avoid complete discharge cycles, and monitor battery voltage with the integrated voltmeter to avoid overdischarge. This remains one of the most important operational lessons.

11.5 Mechanical Wear: Brakes and Tires

Beyond the electrical system, normal bicycle maintenance components required periodic replacement:

- Brake pads: Required replacement approximately every 6–8 months due to normal wear
- Bicycle tires: Required replacement as rubber degraded from use and UV exposure
- Chain lubrication: Regular maintenance required to prevent rust and wear

These are normal bicycle maintenance items, easily managed and inexpensive (₹200–500 per replacement).

11.6 Power Cable Failure

Issue: Charging cable deteriorated after two years, creating intermittent charging connection
Solution: Replaced with new charging cable (cost: ~₹20)
Learning: External cables require periodic inspection and replacement as normal maintenance

12. Cost Analysis

12.1 Component Cost Breakdown

The following image shows the actual component cost breakdown sourced in 2023:

Necessary minimum expenses							
SL. No.	Name	Specifications	Price	Link	Offline	Ordered	Final
1	DC Motor	250W 24V	1711	DC MOTOR		YES	1922
2	Battery	24V 12Ah	1000	Battery	1000	YES	1000
3	Speed controller	24V 33A	569	ESC		YES	569
4	Charger	14V 2A	350	Charger	350	YES	350
5	Sprocket	80T OD(165) ID(54)	335	Sprocket		YES	335
6	Freewheel	22T OD(93) ID(34)	199	Freewheel	100	YES	180
7	Chain	25H	400	Chain	0	YES	0
8	Keylock switch	12V 1A	167	Keylock switch		YES	167
9	Wire	14 AWG	99	Wire		YES	99
10	Wire	22 AWG	58	Wire		YES	58
11	Throtle	23mm 1.56M	249	Throtle		YES	249
12	Double sided threaded hub	34mm	550	Hub	150	YES	150
		Total Price	5687				

Additional expenses							
SL. No.	Name	Specifications	Price	Link	Offline	Ordered	Final
1	USB Converter	12V to 5V 3A	68	USB	Free	YES	0
2	Headlight	12V 1.2A	144	Light	20	YES	20
3	Voltmeter and ammeter	0-100V 50A	306	Voltmeter	180	YES	
4	Tactile switch	12mm x 12mm x 6mm	10	Tactile	20	YES	20
5	Heat shrink	1mm 5m	25	Heat shrink		YES	25
6	Heat shrink	2mm 3m	25	Heat shrink		YES	25
7	Solder wire	1mm 50g	140	Solder	140	YES	
8	Voltmeter	DC 0 - 100V	130	Voltmeter	130+180	YES	230
9	DPDT Switch	10A 220V On-Off-On + 6A On-Off-On	69	Switch	30+40	YES	70
10	Foam gasket	10mm x 2mm x 10m	110	Foam		YES	110
11	Motor and battery socket (MALE) x 2	XT30-U	58	Male		YES	58
12	Motor and battery socket (FEMALE) x 2	XT30-U	58	Female		YES	58
13	Connectors x 10	2 pins JST XH 2.54mm Pitch	70	Connector		YES	70
14	Charger connector	2.1mm, 5.5mm	29	Charge		YES	29
15	Push button switch	Self lock	99	Power switch	29	YES	29
16	Acrylic sheet	4' x 2' + 2' x 3"	800	Sheet	400	YES	400
17	Nut and bolt and warsher	M6 2"	120	Nut	85	YES	85
18	Motor plate	14cm x 8cm	N/A	N/A	70	YES	70
19	Chain	1.5 feet	150	Chain	60	YES	60
20	Heat shrink	5mm 1m	40	Heat shrink	15	YES	15
21	Lock	5 link	100	Lock	58	YES	50
22	VTR Switch	6 pin on/off	9	Vtr	10	YES	20
23	Philips connector and plug	cable with AC connector	50	Philips	15	YES	15
24	Balls	for axle	2 × 18	Balls	1 × 18	YES	18
25	Spokes	for 26"	120	Spokes	60	YES	60
26	Nuts and bolts and warshers	4 inch × 12	NA	Screw	250	YES	250
27	Battery plate	1.5 ft 1 inch	300	Na	100	YES	100
						YES	
		Discount					-37
		Delivery charges					137

Making charges			
SL No.	Name	Specifications	Price
1	Lathe	Sprocket lathe and freewheel weld with sprocket	100
2	Drill	Motor plate holes	70
3	Welding	Sprocket welded to hub	10
4	Chain joining	Chain joined and wheel alignment	100
5	Lacing	Spokes joined to the wheel	150
6	Tube	Valve tube replaced	15
		Total Price	7511

Figure 2 – Component Cost Breakdown Table

Cost Category	Amount (INR)
Essential Components (Motor, Battery, etc.)	₹5,687
Additional Electrical Components	₹1,500 – ₹2,000
Mechanical Assembly and Tools	₹300 – ₹500
Making Charges (Lathe, Welding, etc.)	₹445

Discount / Bulk Purchasing	–₹37
Delivery Charges	₹137
TOTAL COST	~₹8,032 – ₹8,500

12.2 Comparison with Market Alternatives

Product	Price Range	Remarks
P Cube – Power Pedal Pro	₹7,000 – ₹8,500	All components included; recycled materials; comprehensive features
Basic Conversion Kits (Market)	₹8,000 – ₹15,000	Often missing batteries, chargers, and covers; significant hidden costs
Premium Conversion Kits	₹20,000+	Complete but expensive; lithium batteries increase cost
Fully Built E-Bikes	₹30,000+	Complete systems with warranty; not affordable for target market

12.3 Cost Advantages of the P Cube Approach

- Recycled Materials: UPS batteries (₹0–₹500), truck lights (₹0–₹50), timing chains (₹0–₹100)
- Component Sourcing: Extensive market research identified the most cost-effective vendors
- DIY Assembly: Labor cost reduced to zero through personal hands-on work
- Simplified Design: Avoided expensive BMS, regenerative braking, or advanced sensors
- Smart Substitutions: Plug sockets instead of expensive DPDT switches; epoxy instead of welding where appropriate

12.4 Scalability and Manufacturing Costs

If manufactured at scale (100+ units), several cost reductions would be possible:

- Bulk component purchasing: 15–25% cost reduction
- Standardized manufacturing process: Labor costs reduced
- Supplier partnerships: Direct relationships with recycled material sources
- Jig and fixture investment: Improves assembly consistency and speed

Projected Production Cost: At scale, the P Cube could potentially be produced at ₹5,500–₹6,500, allowing for reasonable profit margins while maintaining affordability.

13. Future Development

While the current P Cube prototype is fully functional and has demonstrated reliability, several enhancements could be implemented in future iterations:

13.1 Advanced Battery Technology

- Lithium Iron Phosphate (LiFePO4) Battery: Lighter, longer lifespan (5–10 years vs 2–3 years), faster charging
- Benefits: Reduced weight, improved range, better performance in extreme temperatures
- Trade-off: Premium cost compared to recycled lead-acid, but lifecycle cost may be favorable

13.2 Regenerative Braking System

The current freewheel design prevents motor back-drive, simplifying the system but eliminating energy recovery during braking. A controlled regenerative braking system would:

- Recover 20–30% of braking energy
- Extend range by 10–15% on typical urban routes
- Reduce heat dissipation in brakes (wear reduction)
- Require a more complex controller and hub motor design

13.3 Smart Connectivity

- IoT Integration: GPS tracking, route logging, and performance analytics via smartphone app
- Battery Management: Real-time monitoring of battery health, charging cycles, and estimated lifespan
- Firmware Updates: Over-the-air updates to controller software for performance optimization
- Social Features: Ride sharing, speed competitions, and community engagement

13.4 Enhanced Material Science

- Lightweight Composites: Carbon fiber or aluminum alloys to reduce overall weight by 20–30%
- Advanced Epoxy Formulations: Temperature-resistant epoxies for extreme weather performance
- Nano-coatings: Hydrophobic and rust-preventive coatings to extend component lifespan

13.5 Motor Upgrade Path

- Brushless DC (BLDC) Motor: Improved efficiency (up to 85% vs 75% for brushed), longer lifespan, quieter
- Direct-Drive Hub Motor: Integrated motor into wheel hub, enabling regenerative braking
- Dual-Motor System: Independent front and rear motors for improved traction and control

13.6 Manufacturing and Scalability

- Standardized Production Design: Optimize assembly process for efficient manufacturing
- Quality Assurance Protocol: Develop testing procedures for each manufactured unit
- Supply Chain Development: Establish relationships with recycled material suppliers
- Certification and Compliance: Obtain necessary regulatory approvals for sale in different regions
- User Support System: Documentation, customer service, and warranty management

14. Key Achievements

Throughout the P Cube project journey, the work has received recognition from various organizations and media outlets.

14.1 Media Recognition

The P Cube project garnered attention from multiple news outlets and media organizations:

- NEWS7
- ETV
- OTV
- KANAK NEWS
- ARGUS NEWS
- CITY LIGHTS MAGAZINE

14.2 Competition Selection and Awards

Catch Them Young Program

- Selected for Catch Them Young Phase 3: Student Innovation Fair 2024
- Selected for Catch Them Young Phase 2: ATL Think Camp 2024
- Awarded Best Innovative Project – Catch Them Young Phase 3: Student Innovation Fair 2024

ATL Marathon 2023–24

- Selected in TOP 500 teams of ATL Marathon 2023–24
- Selected in TOP 150 teams of ATL Marathon 2023–24

Avishkaar Makeathon 2024

- Selected for Avishkaar Makeathon 2024

MeitY TIDE 2.0

- Selected for KIIT-TBI MeitY TIDE 2.0 Call 4 — presented as the only student before the Selection & Mentoring Committee (SMC) in November 2024

National Science Talent Search (NSTS) 2024

- Shortlisted for NSTS 2024 Grand Finale (held 31 January – 1 February 2025)

VIVO Ignite

- Selected for VIVO Ignite innovation program

14.3 Impact and Significance

These recognitions reflect the project's potential to address real-world challenges in affordable transportation. The combination of technical innovation, sustainability focus, and market relevance has resonated with judges, media, and industry professionals. The project demonstrates that effective engineering solutions need not be expensive or complex. By focusing on practical problem-solving and resourceful component sourcing, accessible

technology becomes achievable.

15. Conclusion

The P Cube – Power Pedal Pro represents a successful case study in practical engineering education, sustainable innovation, and problem-solving. What began as a personal project during a school break evolved into a refined, tested system that demonstrates both technical competence and creative thinking.

Key Takeaways

- Affordability is achievable through intelligent component selection and resourceful sourcing
- Hands-on learning through troubleshooting and iteration leads to superior engineering intuition
- Sustainability and economics are not contradictory—recycled materials reduce both cost and environmental impact
- Creative problem-solving (plug socket switching, epoxy bonding) can substitute for expensive off-the-shelf components
- Failure and iteration are essential parts of the engineering process
- Real-world testing reveals insights that theoretical design cannot provide

The P Cube project has equipped me with practical engineering skills, deep understanding of mechanical and electrical systems integration, and confidence to tackle complex technical challenges. The project showcases the potential for engineering education to create tangible, marketable solutions while maintaining a focus on sustainability and social impact. Whether as a personal portfolio piece, a proof-of-concept for affordable e-mobility, or a springboard for future innovation, the P Cube demonstrates that meaningful engineering can emerge from limited resources, high motivation, and persistent problem-solving.

P Cube – Power Pedal Pro · Ayushman Sahoo · Personal Engineering Project