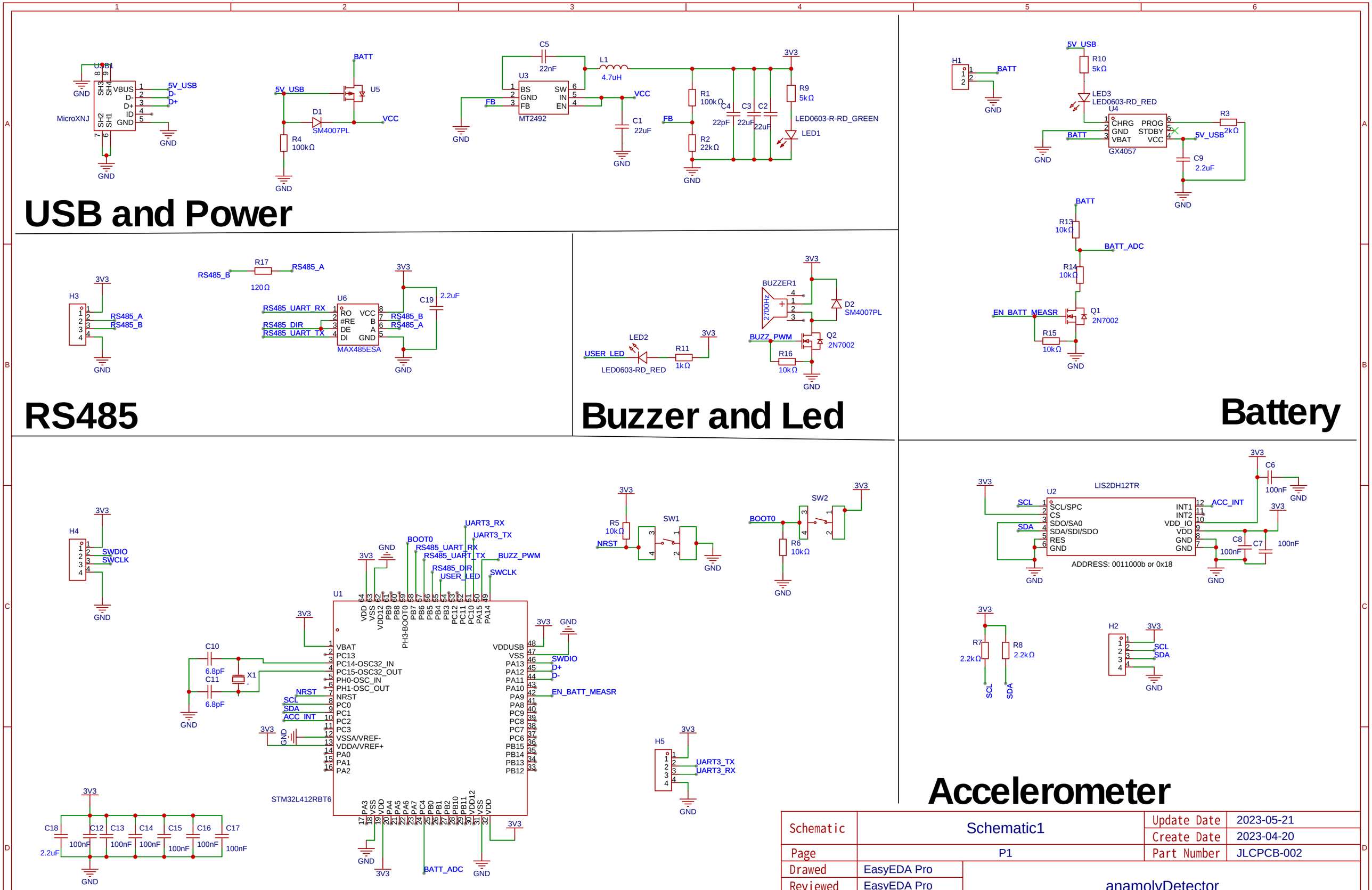

Schematic	Schematic1	Update Date	2023-05-21
		Create Date	2023-04-20
Page	P1	Part Number	JLCPCB-002
Drawed	EasyEDA Pro	anamolyDetector	
Reviewed	EasyEDA Pro		
		VER	SIZE	PAGE 1 OF 1
EasyEDA		V0.1	A4	EasyEDA.com