→ Pipe (unnamed pipe) can be accessible between Related Process

→ If two diff (Non-related) jobs want to communicate using pipe, then they should be made related.?

↳ using exec

Named Pipe (FIFO spl file) can be used to communicate between Non-related jobs too.

→ creation of FIFO

→ mknod, mkfifo

→ opening of FIFO

→ open

→ Data transaction

→ read, write

mknod is used for varieties of spl file, like socket, DD, etc..

mkfifo is for fifo only

= open("fifo", O_RDONLY); // If writer not Attached to the fifobuffer, then open → Blocks

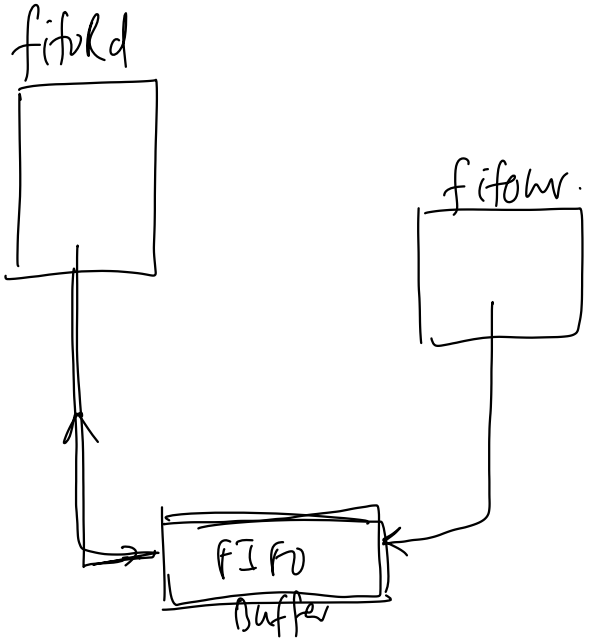

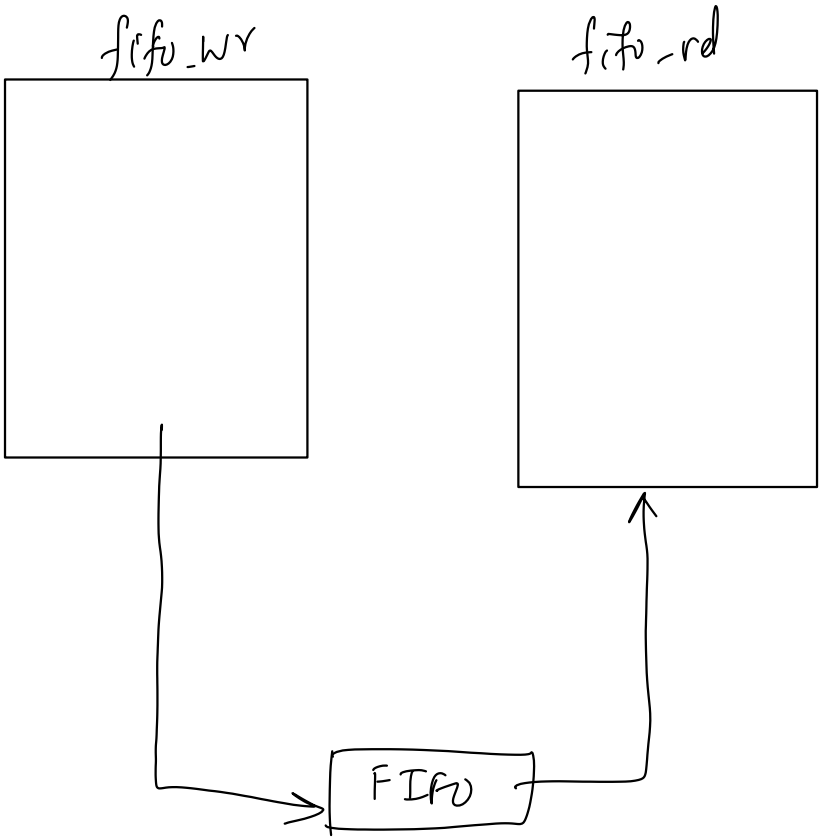

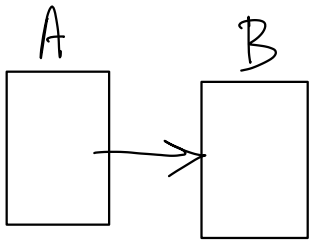

SIMPLEX

Duplex comm using fifo

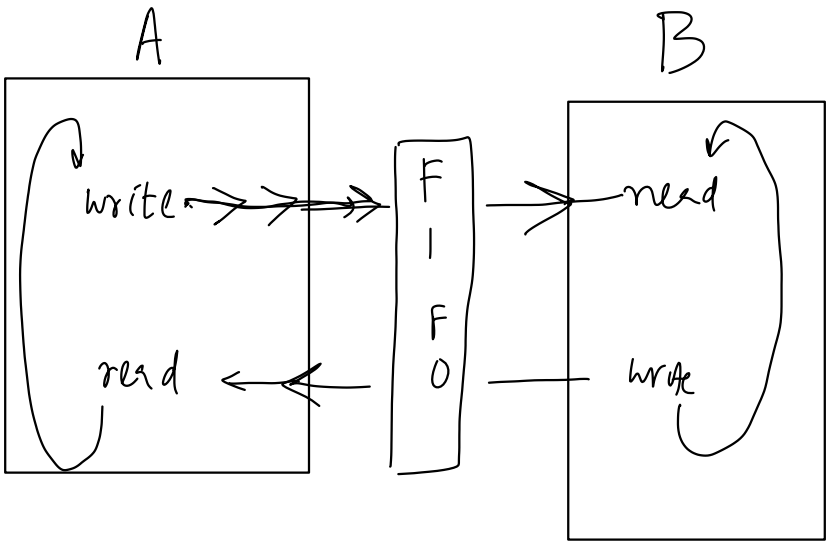

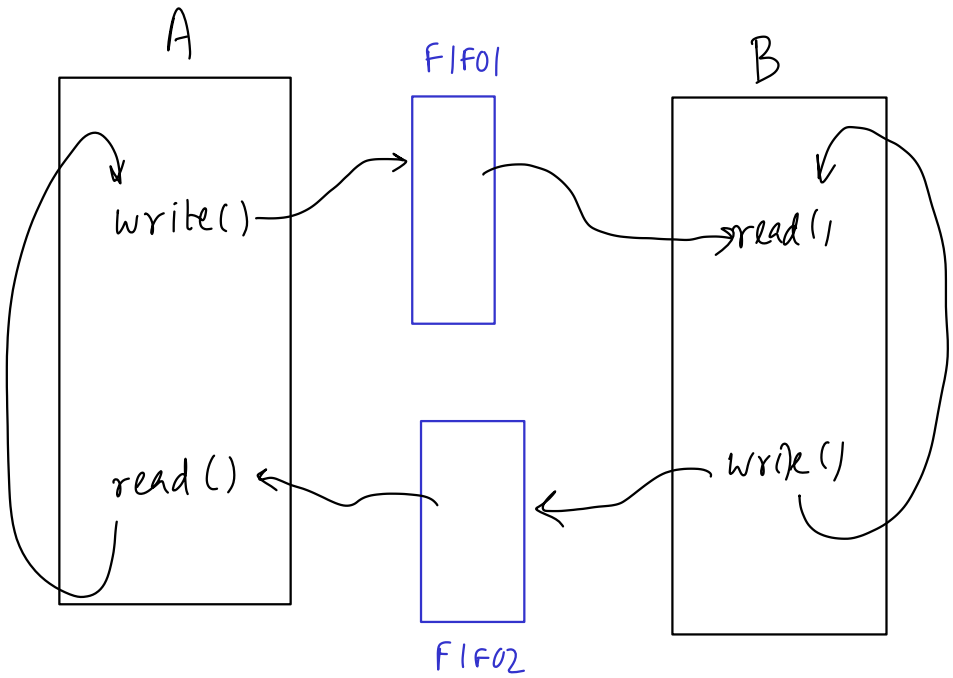

Safe

Half - Duplex

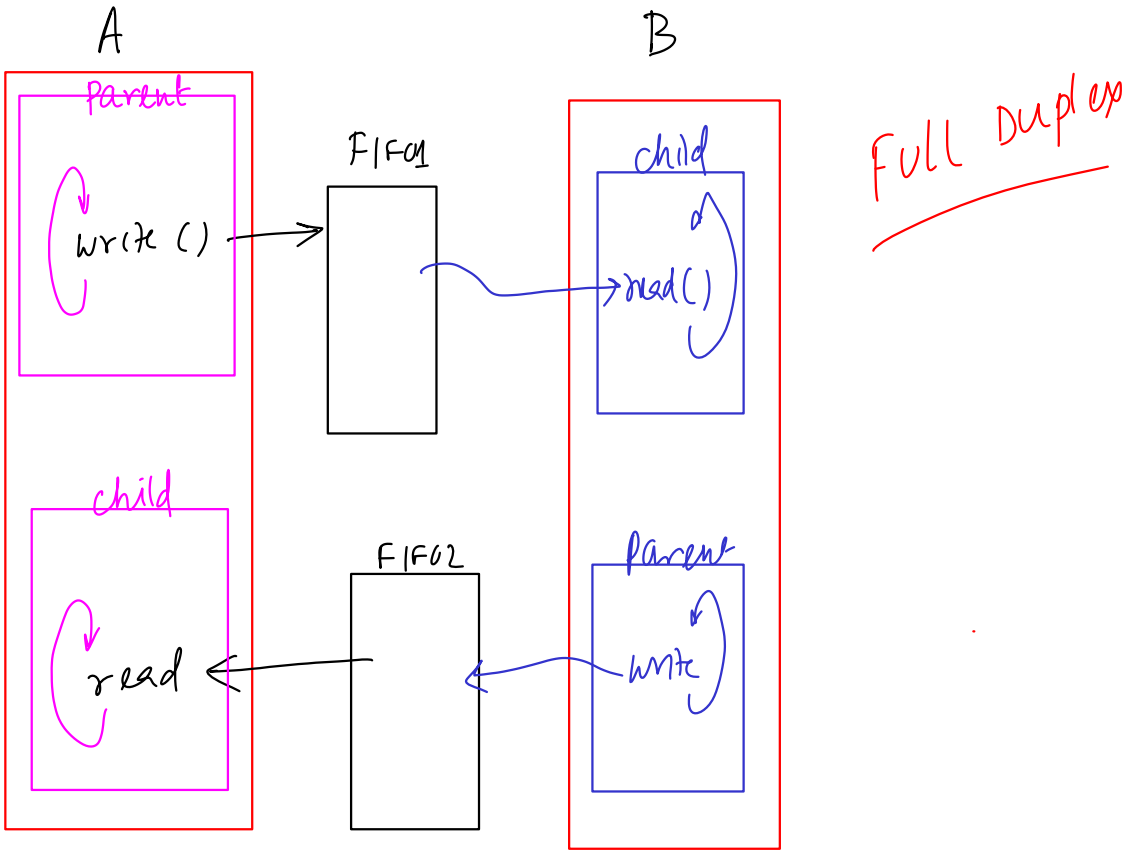

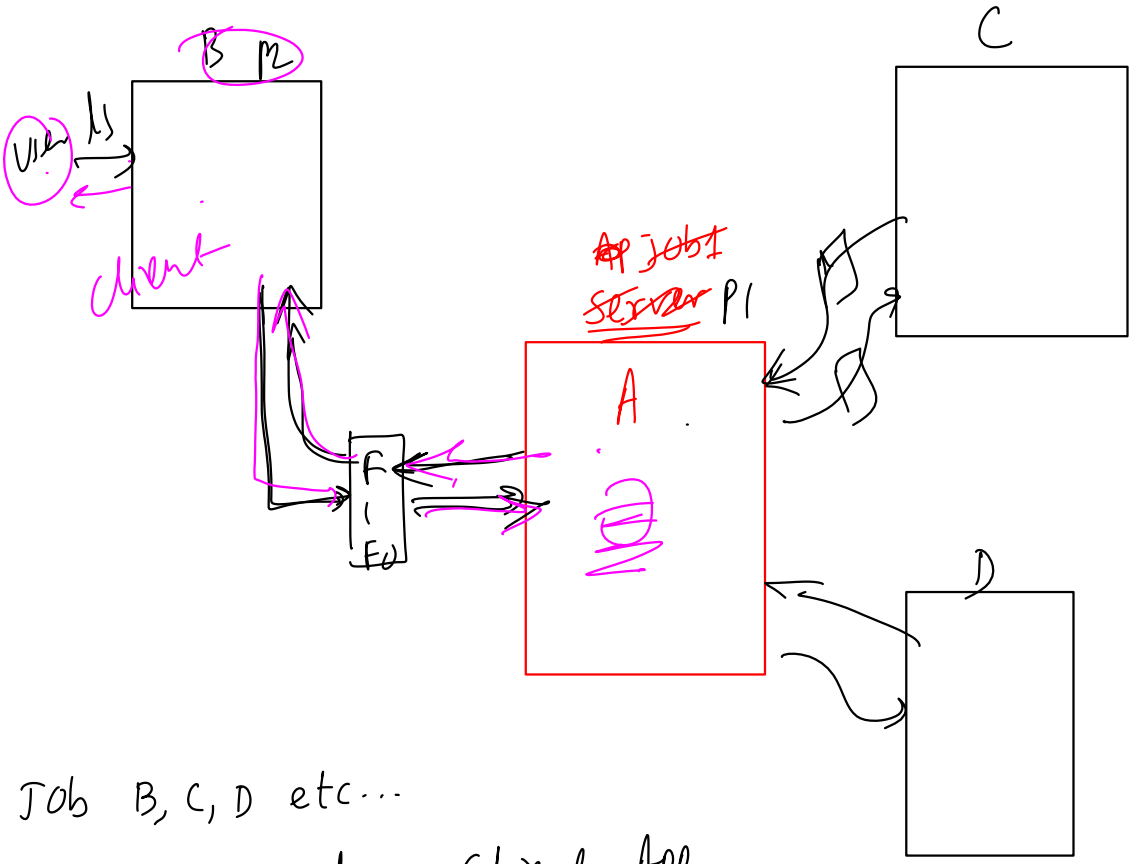

Job B, C, D etc...

considered as Client App,

should pass a command/string to Job. A

Job 'A', upon receiving the command, should execute and send the result back to the client App

Tommorrow

Message Queue and Shared Memory