Any of your concern should reach us.

mail to info@vectorindia.org

All your complaints will be considered fvely.

You will not be victimised.

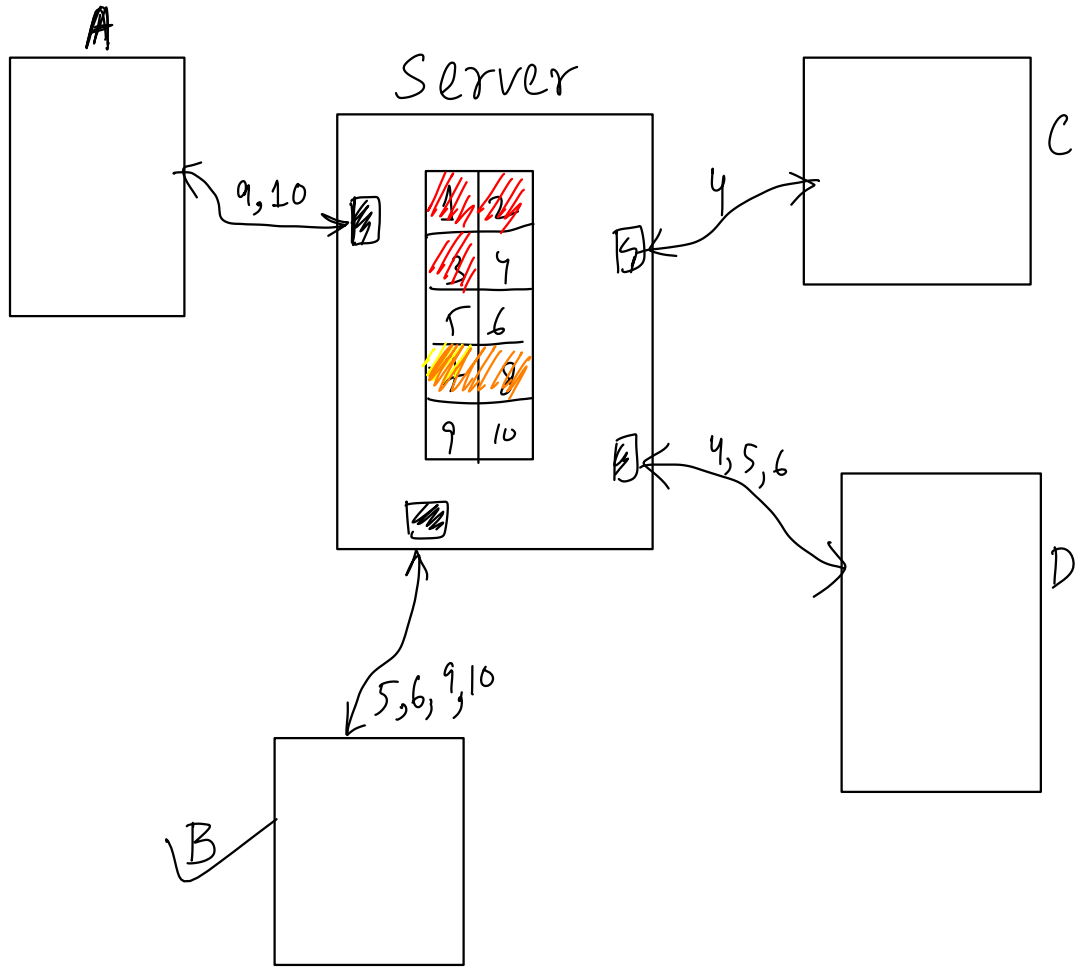

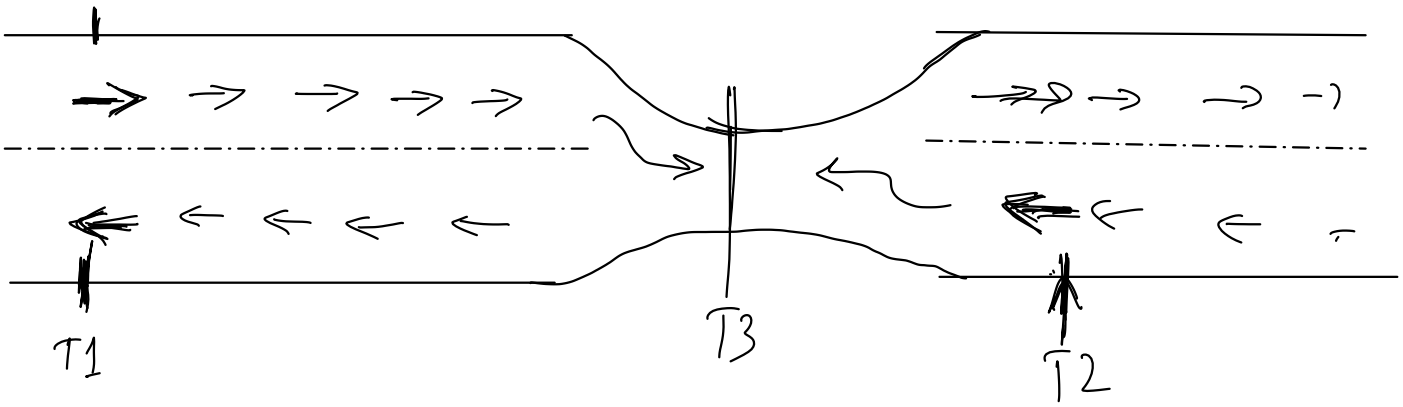

At crossSection T1 and T2, vehicle movement can Concurrent

At narrow Bottleneck T3, movement in both Direction not possible

managed by Synchronisation

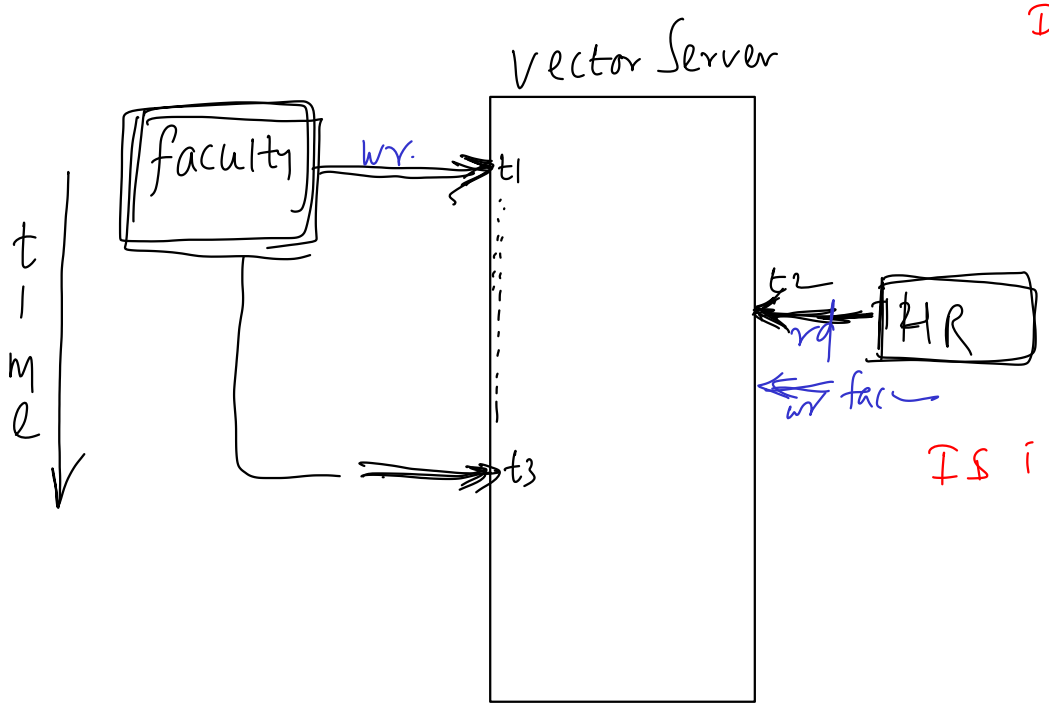

In this situation faculty & HR concurrently Accessing the common Data.

Is it safe ?

Unsafe

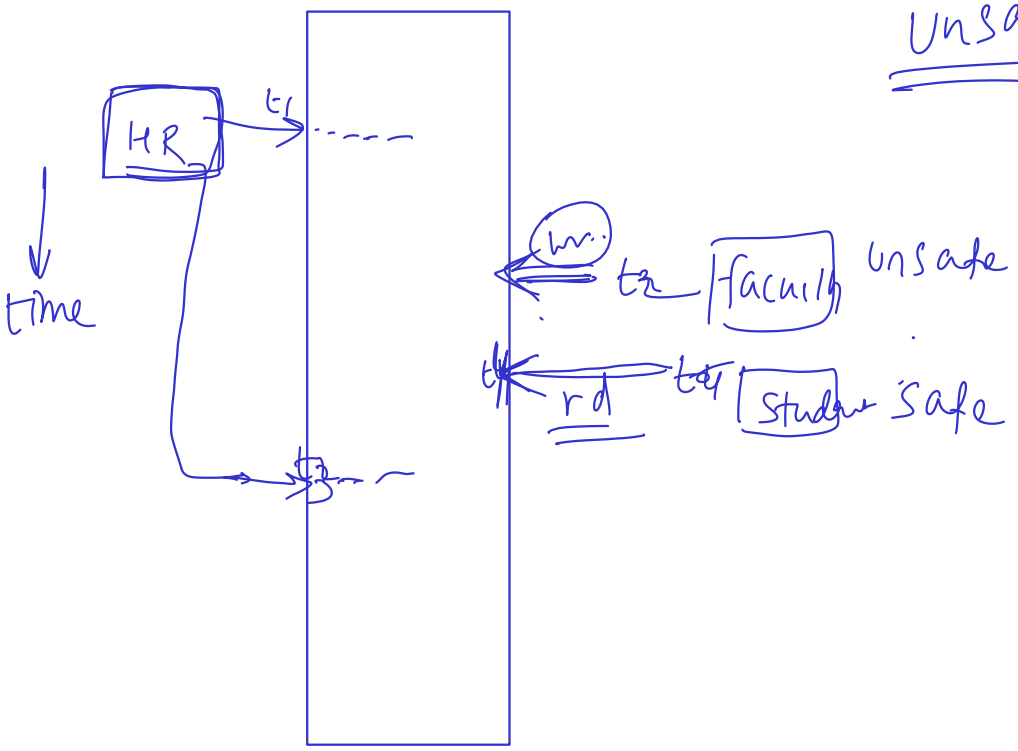

Filelock / Recordlock

- Readlock / shared lock
- write lock / Exclusive lock

Example

Two processes will try to write on Common file

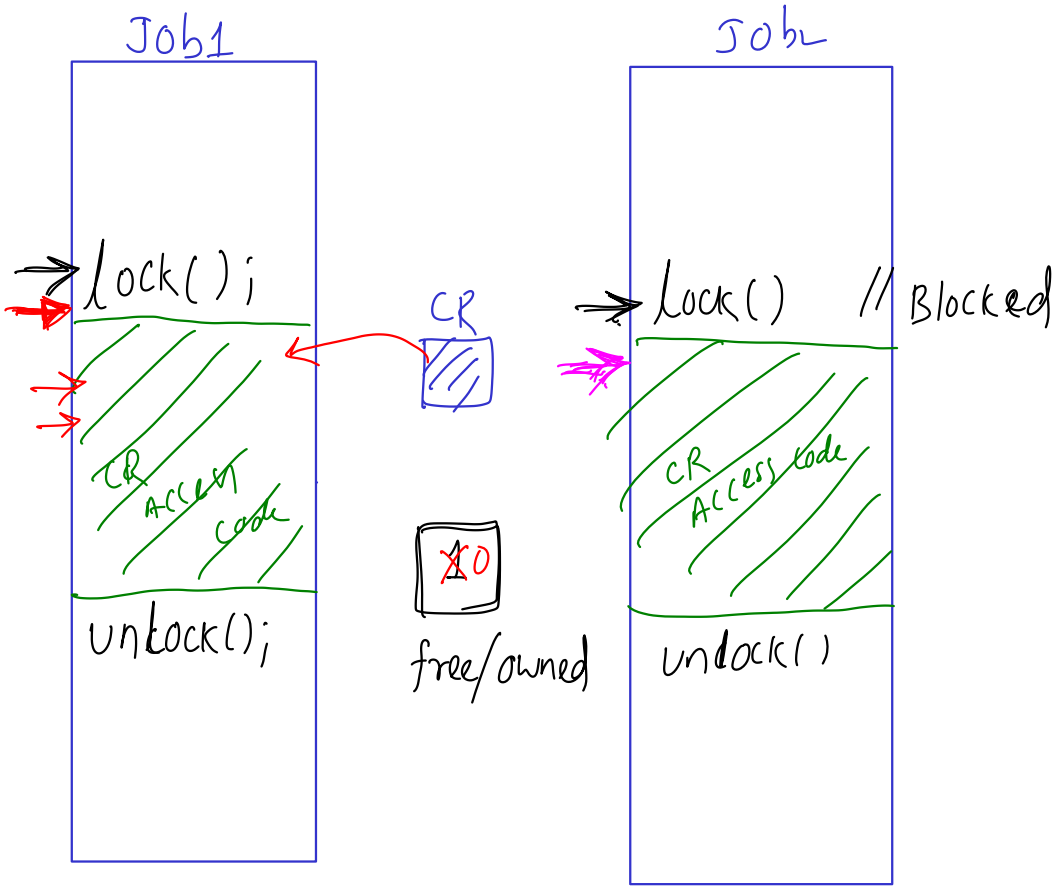

Record lock / file lock

→ must be on file Handling