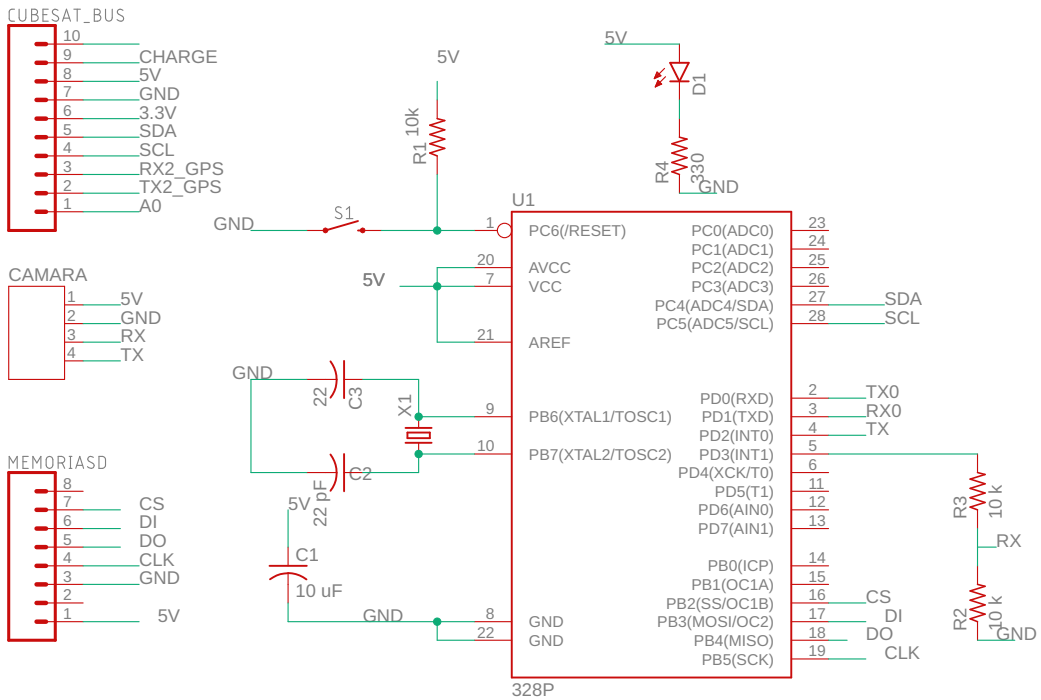

>CNAME	
camara	
5/24/20 7:35 PM	
Sheet: 1/1	Rev: >CREVISION

5/24/20 7:35 PM f=0.97 /Users/aza/Documents/EAGLE/projects/CubeSat/camara.sch (Sheet: 1/1)