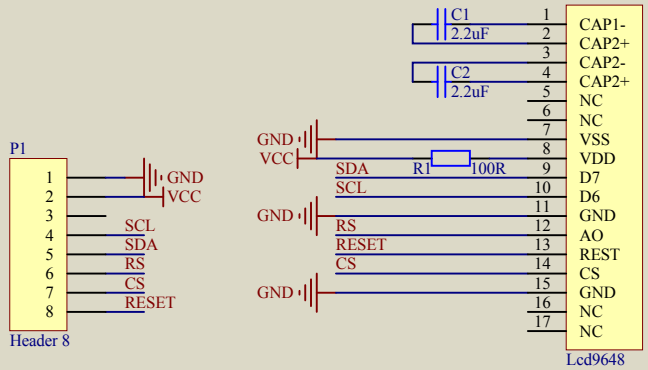

Title		
Size A4	Number	Revision
Date: 2018-5-16		Sheet of
File: F:\ \..\lcd9264.SchDoc		Drawn By: