Title	Page
Cover Sheet	1
Block Diagram	2
CPU-CLK/Control/MISC/PEG,CPU-Memory	3,4
CPU-Power,CPU-GND	5,6
DDRIII DIMMA1&DDRIII DIMMB1	7,8
LYNX-PCI/E/DMI/USB/CLK	9
LYNX-SATA/HOST/FAN/GPIO/VGA	10
LYNX-SMB/LPC/AUDIO/RTC/RST	11
LYNX-POWER PIN,GND/LYNX STRAPS	12,13 ,14
PCIE1(X1) & PCIE2(X16) Slots	15
SIO-NUVOTON NCT5533D	16
ALC892/887	17
LAN RTL8111G/8106E	18
SATA /USB3.0 Connector	19
USB2.0 Connector	20
DVI	21
VGA	22
CPU Power - ISL95812	23 24
DDR Power -UP1504 1-Phase	25
PCH Power - OP+MOS	26
ACPI Controller UPI	27
ATX F_Panel/EMI/TPM/LPT	28
XDP CPU & PCH	29
Manual Parts	30

MS-7817

mATX

Ver: 10

Intel Sharkbay plamform H81

CPU:

INTEL-Haswell LGA1150

System Chipset:

INTEL-LYNX

Memory:

*DDRIII (1333/1666MHz) * 2 (Dual Channel)*

PWM:

VRD12 - ISL95812

OnBoard Chipset:

HD Audio Codec:RTL892

LAN-realtek8111G

SIO:NUVOTON 5533D

SPI ROM: 64 MB

Other:

*DVI*1*
*VGA*1*
*SATA2*2*
*SATA3*2*
*FRONT USB2.0 *2*
*REAL USB2.0 *4*
*REAL USB3.0 *2*

Expansion Slots:

*PCI Express (X16) Slot * 1*

*PCI Express (X1) Slot * 1*

MICRO-STAR INT'L CO.,LTD
MSI
MS-7817
Size: Custom
Document Description: Cover Sheet
Rev: 10
Date: Tuesday, December 04, 2012
Sheet 1 of 36

AV COMPUTER CENTER - TRUNG TÂM MÁY TÍNH AV
0904.701.445 - 0968.789.980

MS-7817 Block Diagram

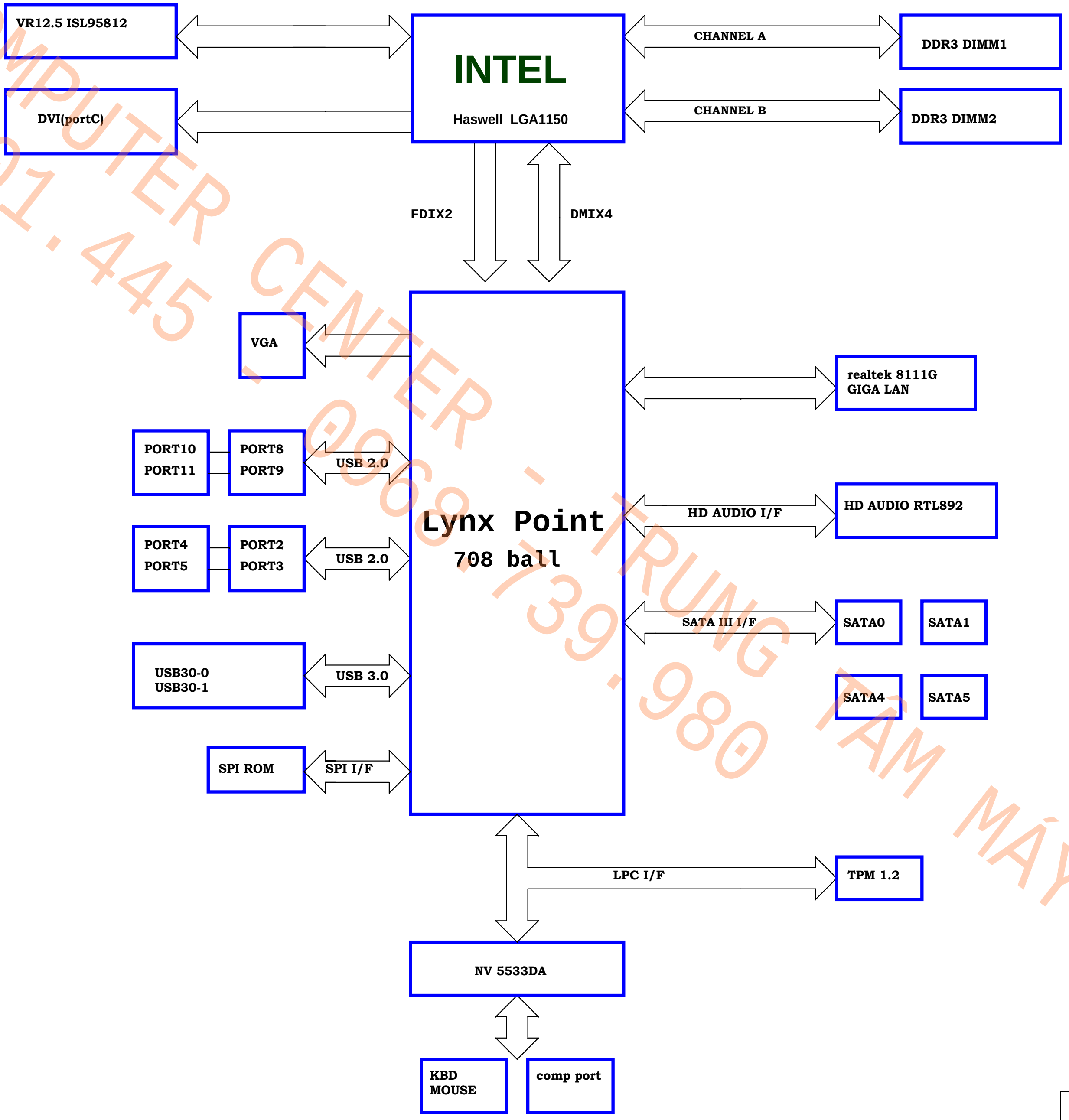
VR12.5 ISL95812
DVI(portC)
INTEL
Haswell LGA1150
CHANNEL A
CHANNEL B
DDR3 DIMM1
DDR3 DIMM2
FDIX2
DMIX4
VGA
realtek 8111G
GIGA LAN
PORT10
PORT11
PORT8
PORT9
USB 2.0
PORT4
PORT5
PORT2
PORT3
USB 2.0
Lynx Point
708 ball
HD AUDIO I/F
HD AUDIO RTL892
SATA III I/F
SATA0
SATA1
SATA4
SATA5
USB30-0
USB30-1
USB 3.0
SPI ROM
SPI I/F
LPC I/F
TPM 1.2
NV 5533DA
KBD
MOUSE
comp port

AV COMPUTER 0904.701.445 - CENTER - 0969.739.980 - TRUNG TÂM MÁY TÍNH AV

MICRO-STAR INT'L CO.,LTD

MS-7817

Size	Document Description	Rev
Custom	**Block Diagram**	10

Date: Monday, November 19, 2012 Sheet 2 of 36

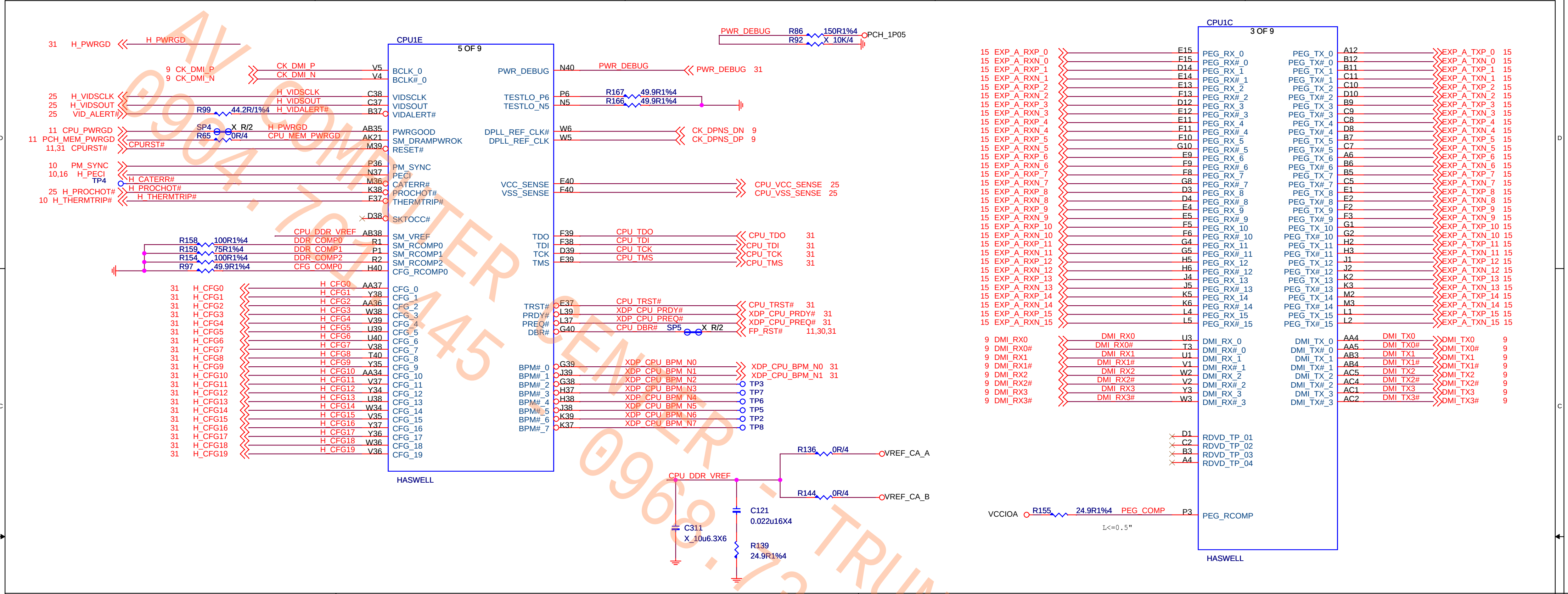

CPU1E
5 OF 9
31 H_PWRGD
H_PWRGD
9 CK_DMI_P
9 CK_DMI_N
CK_DMI_P V5 BCLK_0
CK_DMI_N V4 BCLK#_0
25 H_VIDSCLK
25 H_VIDSOUT
25 VID_ALERT#
H_VIDSCLK C38 VIDSCLK
H_VIDSOUT C37 VIDSOUT
R99 44.2R/1%4 H_VIDALERT# B37 VIDALERT#
11 CPU_PWRGD
11 PCH_MEM_PWRGD
11,31 CPURST#
SP4 X_R/2
R65 0R/4
H_PWRGD AB35 PWRGOOD
CPU_MEM_PWRGD AK21 SM_DRAMPWROK
CPURST# M39 RESET#
10 PM_SYNC
10,16 H_PECI
TP4
H_CATERR#
25 H_PROCHOT#
10 H_THERMTRIP#
H_PROCHOT#
H_THERMTRIP#
P36 PM_SYNC
N37 PECI
M36 CATERR#
K38 PROCHOT#
F37 THERMTRIP#
D38 SKTOCC#
R158 100R1%4
R159 75R1%4
R154 100R1%4
R97 49.9R1%4
CPU_DDR_VREF AB38 SM_VREF
DDR_COMP0 R1 SM_RCOMP0
DDR_COMP1 P1 SM_RCOMP1
DDR_COMP2 R2 SM_RCOMP2
CFG_COMP0 H40 CFG_RCOMP0
31 H_CFG0 AA37 CFG_0
31 H_CFG1 Y38 CFG_1
31 H_CFG2 AA36 CFG_2
31 H_CFG3 W38 CFG_3
31 H_CFG4 V39 CFG_4
31 H_CFG5 U39 CFG_5
31 H_CFG6 U40 CFG_6
31 H_CFG7 V38 CFG_7
31 H_CFG8 T40 CFG_8
31 H_CFG9 Y35 CFG_9
31 H_CFG10 AA34 CFG_10
31 H_CFG11 V37 CFG_11
31 H_CFG12 Y34 CFG_12
31 H_CFG13 U38 CFG_13
31 H_CFG14 W34 CFG_14
31 H_CFG15 V35 CFG_15
31 H_CFG16 Y37 CFG_16
31 H_CFG17 Y36 CFG_17
31 H_CFG18 W36 CFG_18
31 H_CFG19 V36 CFG_19
HASWELL
PWR_DEBUG N40 PWR_DEBUG
PWR_DEBUG 31
PWR_DEBUG R86 150R1%4 PCH_1P05
R92 X_10K/4
TESTLO_P6 P6 R167 49.9R1%4
TESTLO_N5 N5 R166 49.9R1%4
DPLL_REF_CLK# W6 CK_DPNS_DN 9
DPLL_REF_CLK W5 CK_DPNS_DP 9
VCC_SENSE E40 CPU_VCC_SENSE 25
VSS_SENSE F40 CPU_VSS_SENSE 25
TDO F39 CPU_TDO 31
TDI F38 CPU_TDI 31
TCK D39 CPU_TCK 31
TMS E39 CPU_TMS 31
TRST# E37 CPU_TRST# 31
PRDY# L39 XDP_CPU_PRDY# 31
PREQ# L37 XDP_CPU_PREQ# 31
DBR# G40 CPU_DBR# SP5 X_R/2 FP_RST# 11,30,31
BPM#_0 G39 XDP_CPU_BPM_N0 31
BPM#_1 J39 XDP_CPU_BPM_N1 31
BPM#_2 G38 XDP_CPU_BPM_N2 TP3
BPM#_3 H37 XDP_CPU_BPM_N3 TP7
BPM#_4 H38 XDP_CPU_BPM_N4 TP6
BPM#_5 J38 XDP_CPU_BPM_N5 TP5
BPM#_6 K39 XDP_CPU_BPM_N6 TP2
BPM#_7 K37 XDP_CPU_BPM_N7 TP8
CPU_DDR_VREF
R136 0R/4 VREF_CA_A
R144 0R/4 VREF_CA_B
C121 0.022u16X4
C311 X_10u6.3X6
R139 24.9R1%4
CPU1C
3 OF 9
15 EXP_A_RXP_0 E15 PEG_RX_0
15 EXP_A_RXN_0 F15 PEG_RX#_0
15 EXP_A_RXP_1 D14 PEG_RX_1
15 EXP_A_RXN_1 E14 PEG_RX#_1
15 EXP_A_RXP_2 E13 PEG_RX_2
15 EXP_A_RXN_2 F13 PEG_RX#_2
15 EXP_A_RXP_3 D12 PEG_RX_3
15 EXP_A_RXN_3 E12 PEG_RX#_3
15 EXP_A_RXP_4 E11 PEG_RX_4
15 EXP_A_RXN_4 F11 PEG_RX#_4
15 EXP_A_RXP_5 F10 PEG_RX_5
15 EXP_A_RXN_5 G10 PEG_RX#_5
15 EXP_A_RXP_6 E9 PEG_RX_6
15 EXP_A_RXN_6 F9 PEG_RX#_6
15 EXP_A_RXP_7 F8 PEG_RX_7
15 EXP_A_RXN_7 G8 PEG_RX#_7
15 EXP_A_RXP_8 D3 PEG_RX_8
15 EXP_A_RXN_8 D4 PEG_RX#_8
15 EXP_A_RXP_9 E4 PEG_RX_9
15 EXP_A_RXN_9 E5 PEG_RX#_9
15 EXP_A_RXP_10 F5 PEG_RX_10
15 EXP_A_RXN_10 F6 PEG_RX#_10
15 EXP_A_RXP_11 G4 PEG_RX_11
15 EXP_A_RXN_11 G5 PEG_RX#_11
15 EXP_A_RXP_12 H5 PEG_RX_12
15 EXP_A_RXN_12 H6 PEG_RX#_12
15 EXP_A_RXP_13 J4 PEG_RX_13
15 EXP_A_RXN_13 J5 PEG_RX#_13
15 EXP_A_RXP_14 K5 PEG_RX_14
15 EXP_A_RXN_14 K6 PEG_RX#_14
15 EXP_A_RXP_15 L4 PEG_RX_15
15 EXP_A_RXN_15 L5 PEG_RX#_15
PEG_TX_0 A12 EXP_A_TXP_0 15
PEG_TX#_0 B12 EXP_A_TXN_0 15
PEG_TX_1 B11 EXP_A_TXP_1 15
PEG_TX#_1 C11 EXP_A_TXN_1 15
PEG_TX_2 C10 EXP_A_TXP_2 15
PEG_TX#_2 D10 EXP_A_TXN_2 15
PEG_TX_3 B9 EXP_A_TXP_3 15
PEG_TX#_3 C9 EXP_A_TXN_3 15
PEG_TX_4 C8 EXP_A_TXP_4 15
PEG_TX#_4 D8 EXP_A_TXN_4 15
PEG_TX_5 B7 EXP_A_TXP_5 15
PEG_TX#_5 C7 EXP_A_TXN_5 15
PEG_TX_6 A6 EXP_A_TXP_6 15
PEG_TX#_6 B6 EXP_A_TXN_6 15
PEG_TX_7 B5 EXP_A_TXP_7 15
PEG_TX#_7 C5 EXP_A_TXN_7 15
PEG_TX_8 E1 EXP_A_TXP_8 15
PEG_TX#_8 E2 EXP_A_TXN_8 15
PEG_TX_9 F2 EXP_A_TXP_9 15
PEG_TX#_9 F3 EXP_A_TXN_9 15
PEG_TX_10 G1 EXP_A_TXP_10 15
PEG_TX#_10 G2 EXP_A_TXN_10 15
PEG_TX_11 H2 EXP_A_TXP_11 15
PEG_TX#_11 H3 EXP_A_TXN_11 15
PEG_TX_12 J1 EXP_A_TXP_12 15
PEG_TX#_12 J2 EXP_A_TXN_12 15
PEG_TX_13 K2 EXP_A_TXP_13 15
PEG_TX#_13 K3 EXP_A_TXN_13 15
PEG_TX_14 M2 EXP_A_TXP_14 15
PEG_TX#_14 M3 EXP_A_TXN_14 15
PEG_TX_15 L1 EXP_A_TXP_15 15
PEG_TX#_15 L2 EXP_A_TXN_15 15
9 DMI_RX0 DMI_RX0 U3 DMI_RX_0
9 DMI_RX0# DMI_RX0# T3 DMI_RX#_0
9 DMI_RX1 DMI_RX1 U1 DMI_RX_1
9 DMI_RX1# DMI_RX1# V1 DMI_RX#_1
9 DMI_RX2 DMI_RX2 W2 DMI_RX_2
9 DMI_RX2# DMI_RX2# V2 DMI_RX#_2
9 DMI_RX3 DMI_RX3 Y3 DMI_RX_3
9 DMI_RX3# DMI_RX3# W3 DMI_RX#_3
DMI_TX_0 AA4 DMI_TX0 DMI_TX0 9
DMI_TX#_0 AA5 DMI_TX0# DMI_TX0# 9
DMI_TX_1 AB3 DMI_TX1 DMI_TX1 9
DMI_TX#_1 AB4 DMI_TX1# DMI_TX1# 9
DMI_TX_2 AC5 DMI_TX2 DMI_TX2 9
DMI_TX#_2 AC4 DMI_TX2# DMI_TX2# 9
DMI_TX_3 AC1 DMI_TX3 DMI_TX3 9
DMI_TX#_3 AC2 DMI_TX3# DMI_TX3# 9
D1 RDVD_TP_01
C2 RDVD_TP_02
B3 RDVD_TP_03
A4 RDVD_TP_04
VCCIOA R155 24.9R1%4 PEG_COMP P3 PEG_RCOMP
L<=0.5"
HASWELL

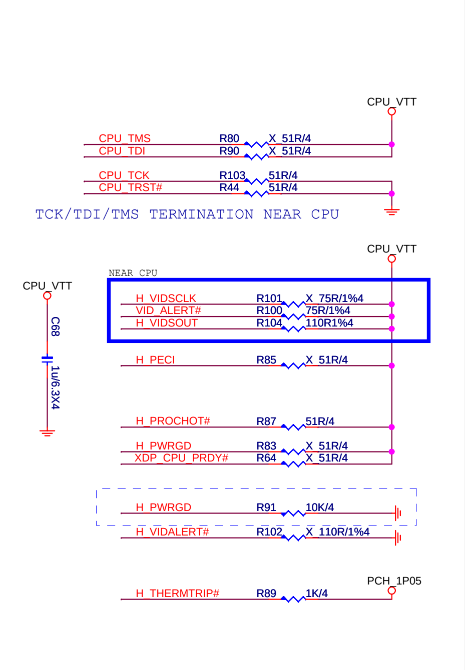

CPU_VTT
CPU_TMS R80 X_51R/4
CPU_TDI R90 X_51R/4
CPU_TCK R103 51R/4
CPU_TRST# R44 51R/4
TCK/TDI/TMS TERMINATION NEAR CPU
CPU_VTT
NEAR CPU
CPU_VTT
C68
1u/6.3X4
H_VIDSCLK R101 X_75R/1%4
VID_ALERT# R100 75R/1%4
H_VIDSOUT R104 110R1%4
H_PECI R85 X_51R/4
H_PROCHOT# R87 51R/4
H_PWRGD R83 X_51R/4
XDP_CPU_PRDY# R64 X_51R/4
H_PWRGD R91 10K/4
H_VIDALERT# R102 X_110R/1%4
PCH_1P05
H_THERMTRIP# R89 1K/4

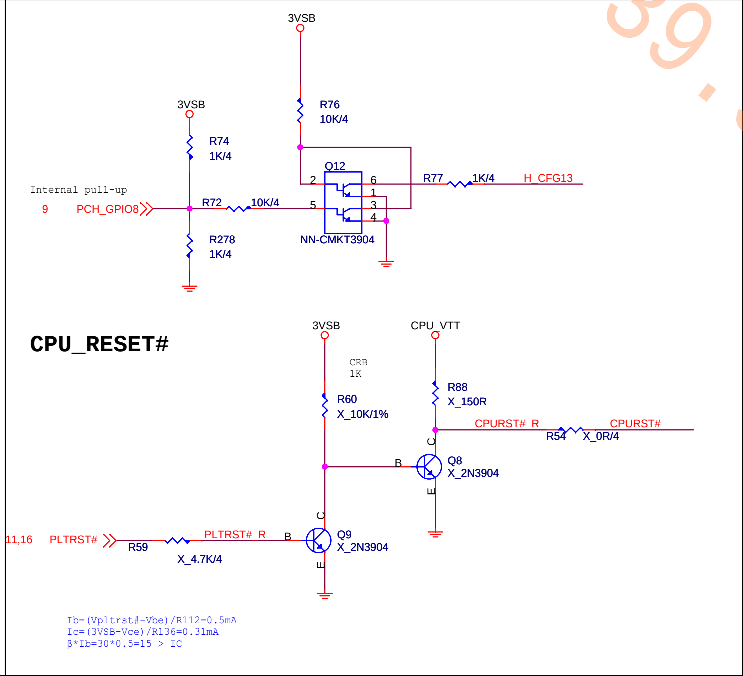

3VSB
R76 10K/4
3VSB
R74 1K/4
Internal pull-up
9 PCH_GPIO8
R72 10K/4
R278 1K/4
Q12
2 6 1 3 5 4
NN-CMKT3904
R77 1K/4 H_CFG13
CPU_RESET#
3VSB
CRB 1K
R60 X_10K/1%
CPU_VTT
R88 X_150R
CPURST#_R
R54 X_0R/4
CPURST#
B C E
Q8 X_2N3904
11,16 PLTRST#
R59 X_4.7K/4
PLTRST#_R
B C E
Q9 X_2N3904
Ib=(Vpltrst#-Vbe)/R112=0.5mA
Ic=(3VSB-Vce)/R136=0.31mA
β*Ib=30*0.5=15 > IC

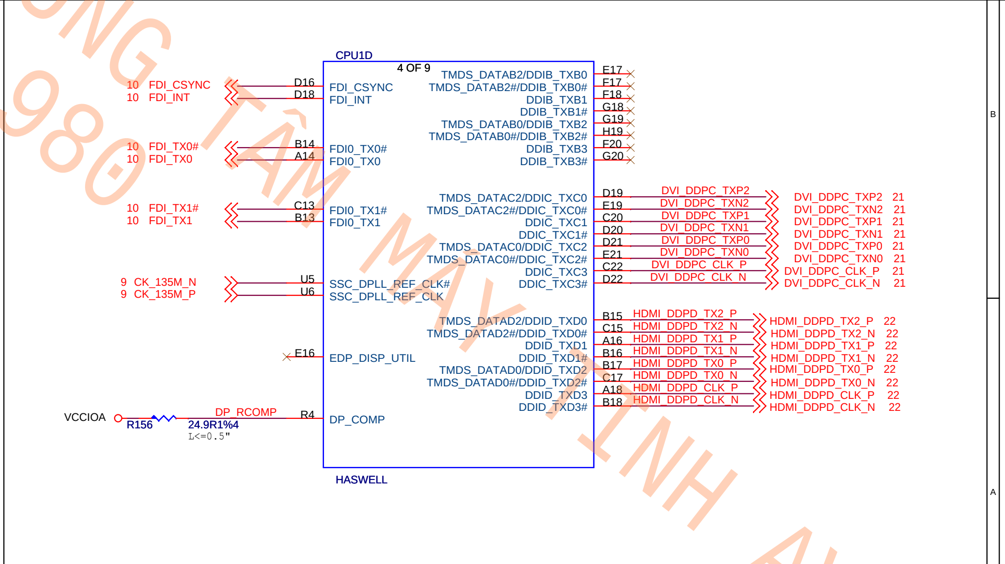

CPU1D
4 OF 9
10 FDI_CSYNC D16 FDI_CSYNC
10 FDI_INT D18 FDI_INT
10 FDI_TX0# B14 FDI0_TX0#
10 FDI_TX0 A14 FDI0_TX0
10 FDI_TX1# C13 FDI0_TX1#
10 FDI_TX1 B13 FDI0_TX1
9 CK_135M_N U5 SSC_DPLL_REF_CLK#
9 CK_135M_P U6 SSC_DPLL_REF_CLK
E16 EDP_DISP_UTIL
VCCIOA R156 24.9R1%4 DP_RCOMP R4 DP_COMP
L<=0.5"
TMDS_DATAB2/DDIB_TXB0 E17
TMDS_DATAB2#/DDIB_TXB0# F17
DDIB_TXB1 F18
DDIB_TXB1# G18
TMDS_DATAB0/DDIB_TXB2 G19
TMDS_DATAB0#/DDIB_TXB2# H19
DDIB_TXB3 F20
DDIB_TXB3# G20
TMDS_DATAC2/DDIC_TXC0 D19 DVI_DDPC_TXP2 DVI_DDPC_TXP2 21
TMDS_DATAC2#/DDIC_TXC0# E19 DVI_DDPC_TXN2 DVI_DDPC_TXN2 21
DDIC_TXC1 C20 DVI_DDPC_TXP1 DVI_DDPC_TXP1 21
DDIC_TXC1# D20 DVI_DDPC_TXN1 DVI_DDPC_TXN1 21
TMDS_DATAC0/DDIC_TXC2 D21 DVI_DDPC_TXP0 DVI_DDPC_TXP0 21
TMDS_DATAC0#/DDIC_TXC2# E21 DVI_DDPC_TXN0 DVI_DDPC_TXN0 21
DDIC_TXC3 C22 DVI_DDPC_CLK_P DVI_DDPC_CLK_P 21
DDIC_TXC3# D22 DVI_DDPC_CLK_N DVI_DDPC_CLK_N 21
TMDS_DATAD2/DDID_TXD0 B15 HDMI_DDPD_TX2_P HDMI_DDPD_TX2_P 22
TMDS_DATAD2#/DDID_TXD0# C15 HDMI_DDPD_TX2_N HDMI_DDPD_TX2_N 22
DDID_TXD1 A16 HDMI_DDPD_TX1_P HDMI_DDPD_TX1_P 22
DDID_TXD1# B16 HDMI_DDPD_TX1_N HDMI_DDPD_TX1_N 22
TMDS_DATAD0/DDID_TXD2 B17 HDMI_DDPD_TX0_P HDMI_DDPD_TX0_P 22
TMDS_DATAD0#/DDID_TXD2# C17 HDMI_DDPD_TX0_N HDMI_DDPD_TX0_N 22
DDID_TXD3 A18 HDMI_DDPD_CLK_P HDMI_DDPD_CLK_P 22
DDID_TXD3# B18 HDMI_DDPD_CLK_N HDMI_DDPD_CLK_N 22
HASWELL

AV COMPUTER 0904.787.445 CENTER 0968.739.980 TRUNG TÂM MÁY TÍNH AV

MICRO-STAR INT'L CO.,LTD

MS-7817

Size	Document Description	Rev
Custom	**CPU-CNTL/CLK/MISC**	10

Date: Tuesday, December 04, 2012 Sheet 3 of 36

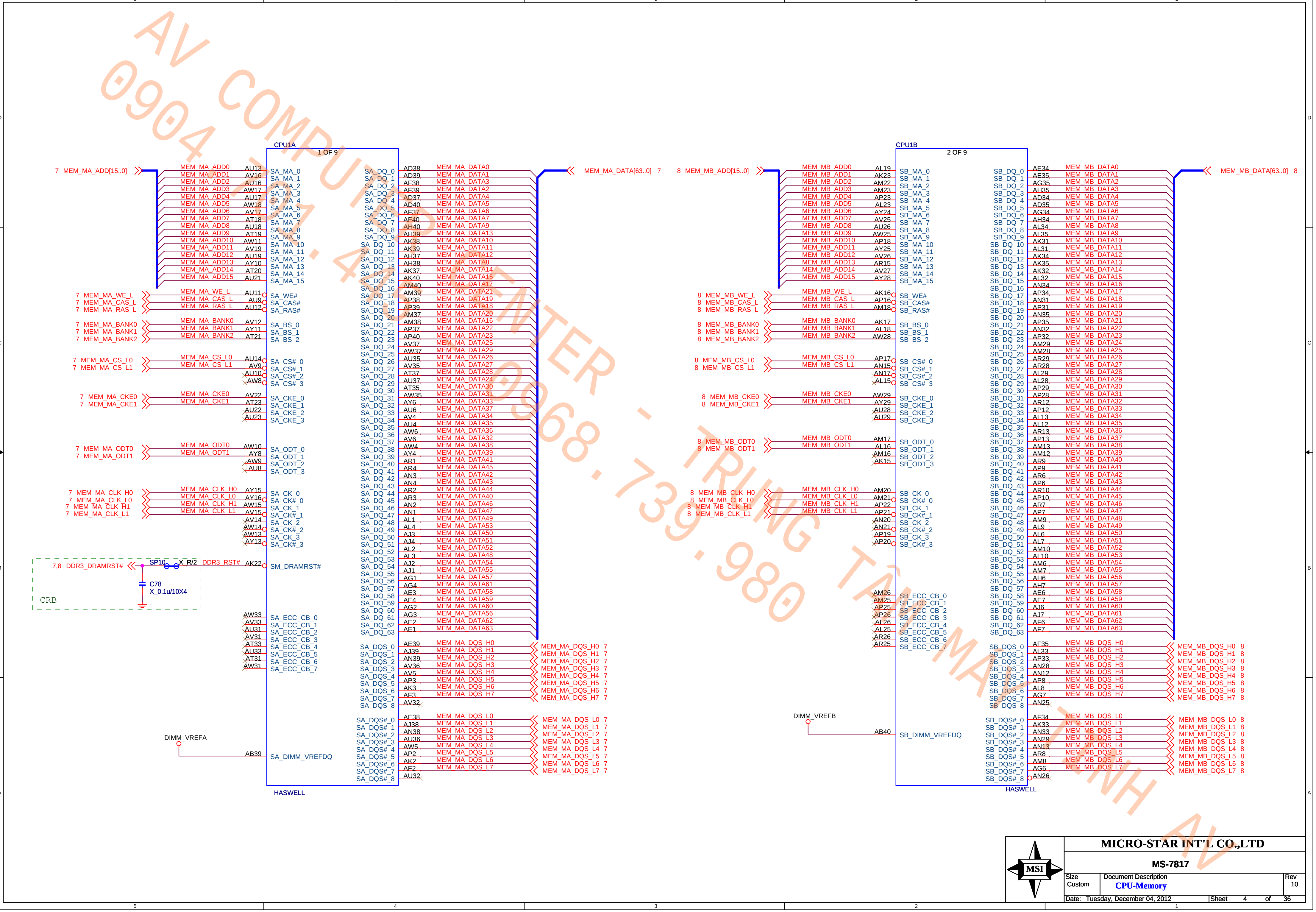
CPU1A
1 OF 9
HASWELL
7 MEM_MA_ADD[15..0]
MEM_MA_ADD0 AU13 SA_MA_0
MEM_MA_ADD1 AV16 SA_MA_1
MEM_MA_ADD2 AU16 SA_MA_2
MEM_MA_ADD3 AW17 SA_MA_3
MEM_MA_ADD4 AU17 SA_MA_4
MEM_MA_ADD5 AW18 SA_MA_5
MEM_MA_ADD6 AV17 SA_MA_6
MEM_MA_ADD7 AT18 SA_MA_7
MEM_MA_ADD8 AU18 SA_MA_8
MEM_MA_ADD9 AT19 SA_MA_9
MEM_MA_ADD10 AW11 SA_MA_10
MEM_MA_ADD11 AV19 SA_MA_11
MEM_MA_ADD12 AU19 SA_MA_12
MEM_MA_ADD13 AY10 SA_MA_13
MEM_MA_ADD14 AT20 SA_MA_14
MEM_MA_ADD15 AU21 SA_MA_15
7 MEM_MA_WE_L MEM_MA_WE_L AU11 SA_WE#
7 MEM_MA_CAS_L MEM_MA_CAS_L AU9 SA_CAS#
7 MEM_MA_RAS_L MEM_MA_RAS_L AU12 SA_RAS#
7 MEM_MA_BANK0 MEM_MA_BANK0 AV12 SA_BS_0
7 MEM_MA_BANK1 MEM_MA_BANK1 AY11 SA_BS_1
7 MEM_MA_BANK2 MEM_MA_BANK2 AT21 SA_BS_2
7 MEM_MA_CS_L0 MEM_MA_CS_L0 AU14 SA_CS#_0
7 MEM_MA_CS_L1 MEM_MA_CS_L1 AV9 SA_CS#_1
AU10 SA_CS#_2
AW8 SA_CS#_3
7 MEM_MA_CKE0 MEM_MA_CKE0 AV22 SA_CKE_0
7 MEM_MA_CKE1 MEM_MA_CKE1 AT23 SA_CKE_1
AU22 SA_CKE_2
AU23 SA_CKE_3
7 MEM_MA_ODT0 MEM_MA_ODT0 AW10 SA_ODT_0
7 MEM_MA_ODT1 MEM_MA_ODT1 AY8 SA_ODT_1
AW9 SA_ODT_2
AU8 SA_ODT_3
7 MEM_MA_CLK_H0 MEM_MA_CLK_H0 AY15 SA_CK_0
7 MEM_MA_CLK_L0 MEM_MA_CLK_L0 AY16 SA_CK#_0
7 MEM_MA_CLK_H1 MEM_MA_CLK_H1 AW15 SA_CK_1
7 MEM_MA_CLK_L1 MEM_MA_CLK_L1 AV15 SA_CK#_1
AV14 SA_CK_2
AW14 SA_CK#_2
AW13 SA_CK_3
AY13 SA_CK#_3
7,8 DDR3_DRAMRST#
SP10
X_R/2
DDR3_RST#
AK22 SM_DRAMRST#
C78
X_0.1u/10X4
CRB
AW33 SA_ECC_CB_0
AV33 SA_ECC_CB_1
AU31 SA_ECC_CB_2
AV31 SA_ECC_CB_3
AT33 SA_ECC_CB_4
AU33 SA_ECC_CB_5
AT31 SA_ECC_CB_6
AW31 SA_ECC_CB_7
DIMM_VREFA
AB39 SA_DIMM_VREFDQ
SA_DQ_0 AD38 MEM_MA_DATA0
SA_DQ_1 AD39 MEM_MA_DATA1
SA_DQ_2 AF38 MEM_MA_DATA3
SA_DQ_3 AF39 MEM_MA_DATA2
SA_DQ_4 AD37 MEM_MA_DATA4
SA_DQ_5 AD40 MEM_MA_DATA5
SA_DQ_6 AF37 MEM_MA_DATA6
SA_DQ_7 AF40 MEM_MA_DATA7
SA_DQ_8 AH40 MEM_MA_DATA9
SA_DQ_9 AH39 MEM_MA_DATA13
SA_DQ_10 AK38 MEM_MA_DATA10
SA_DQ_11 AK39 MEM_MA_DATA11
SA_DQ_12 AH37 MEM_MA_DATA12
SA_DQ_13 AH38 MEM_MA_DATA8
SA_DQ_14 AK37 MEM_MA_DATA14
SA_DQ_15 AK40 MEM_MA_DATA15
SA_DQ_16 AM40 MEM_MA_DATA17
SA_DQ_17 AM39 MEM_MA_DATA21
SA_DQ_18 AP38 MEM_MA_DATA19
SA_DQ_19 AP39 MEM_MA_DATA18
SA_DQ_20 AM37 MEM_MA_DATA20
SA_DQ_21 AM38 MEM_MA_DATA16
SA_DQ_22 AP37 MEM_MA_DATA22
SA_DQ_23 AP40 MEM_MA_DATA23
SA_DQ_24 AV37 MEM_MA_DATA25
SA_DQ_25 AW37 MEM_MA_DATA29
SA_DQ_26 AU35 MEM_MA_DATA26
SA_DQ_27 AV35 MEM_MA_DATA27
SA_DQ_28 AT37 MEM_MA_DATA28
SA_DQ_29 AU37 MEM_MA_DATA24
SA_DQ_30 AT35 MEM_MA_DATA30
SA_DQ_31 AW35 MEM_MA_DATA31
SA_DQ_32 AY6 MEM_MA_DATA33
SA_DQ_33 AU6 MEM_MA_DATA37
SA_DQ_34 AV4 MEM_MA_DATA34
SA_DQ_35 AU4 MEM_MA_DATA35
SA_DQ_36 AW6 MEM_MA_DATA36
SA_DQ_37 AV6 MEM_MA_DATA32
SA_DQ_38 AW4 MEM_MA_DATA38
SA_DQ_39 AY4 MEM_MA_DATA39
SA_DQ_40 AR1 MEM_MA_DATA41
SA_DQ_41 AR4 MEM_MA_DATA45
SA_DQ_42 AN3 MEM_MA_DATA42
SA_DQ_43 AN4 MEM_MA_DATA43
SA_DQ_44 AR2 MEM_MA_DATA44
SA_DQ_45 AR3 MEM_MA_DATA40
SA_DQ_46 AN2 MEM_MA_DATA46
SA_DQ_47 AN1 MEM_MA_DATA47
SA_DQ_48 AL1 MEM_MA_DATA49
SA_DQ_49 AL4 MEM_MA_DATA53
SA_DQ_50 AJ3 MEM_MA_DATA50
SA_DQ_51 AJ4 MEM_MA_DATA51
SA_DQ_52 AL2 MEM_MA_DATA52
SA_DQ_53 AL3 MEM_MA_DATA48
SA_DQ_54 AJ2 MEM_MA_DATA54
SA_DQ_55 AJ1 MEM_MA_DATA55
SA_DQ_56 AG1 MEM_MA_DATA57
SA_DQ_57 AG4 MEM_MA_DATA61
SA_DQ_58 AE3 MEM_MA_DATA58
SA_DQ_59 AE4 MEM_MA_DATA59
SA_DQ_60 AG2 MEM_MA_DATA60
SA_DQ_61 AG3 MEM_MA_DATA56
SA_DQ_62 AE2 MEM_MA_DATA62
SA_DQ_63 AE1 MEM_MA_DATA63
MEM_MA_DATA[63..0] 7
SA_DQS_0 AE39 MEM_MA_DQS_H0 MEM_MA_DQS_H0 7
SA_DQS_1 AJ39 MEM_MA_DQS_H1 MEM_MA_DQS_H1 7
SA_DQS_2 AN39 MEM_MA_DQS_H2 MEM_MA_DQS_H2 7
SA_DQS_3 AV36 MEM_MA_DQS_H3 MEM_MA_DQS_H3 7
SA_DQS_4 AV5 MEM_MA_DQS_H4 MEM_MA_DQS_H4 7
SA_DQS_5 AP3 MEM_MA_DQS_H5 MEM_MA_DQS_H5 7
SA_DQS_6 AK3 MEM_MA_DQS_H6 MEM_MA_DQS_H6 7
SA_DQS_7 AF3 MEM_MA_DQS_H7 MEM_MA_DQS_H7 7
SA_DQS_8 AV32
SA_DQS#_0 AE38 MEM_MA_DQS_L0 MEM_MA_DQS_L0 7
SA_DQS#_1 AJ38 MEM_MA_DQS_L1 MEM_MA_DQS_L1 7
SA_DQS#_2 AN38 MEM_MA_DQS_L2 MEM_MA_DQS_L2 7
SA_DQS#_3 AU36 MEM_MA_DQS_L3 MEM_MA_DQS_L3 7
SA_DQS#_4 AW5 MEM_MA_DQS_L4 MEM_MA_DQS_L4 7
SA_DQS#_5 AP2 MEM_MA_DQS_L5 MEM_MA_DQS_L5 7
SA_DQS#_6 AK2 MEM_MA_DQS_L6 MEM_MA_DQS_L6 7
SA_DQS#_7 AF2 MEM_MA_DQS_L7 MEM_MA_DQS_L7 7
SA_DQS#_8 AU32
CPU1B
2 OF 9
HASWELL
8 MEM_MB_ADD[15..0]
MEM_MB_ADD0 AL19 SB_MA_0
MEM_MB_ADD1 AK23 SB_MA_1
MEM_MB_ADD2 AM22 SB_MA_2
MEM_MB_ADD3 AM23 SB_MA_3
MEM_MB_ADD4 AP23 SB_MA_4
MEM_MB_ADD5 AL23 SB_MA_5
MEM_MB_ADD6 AY24 SB_MA_6
MEM_MB_ADD7 AV25 SB_MA_7
MEM_MB_ADD8 AU26 SB_MA_8
MEM_MB_ADD9 AW25 SB_MA_9
MEM_MB_ADD10 AP18 SB_MA_10
MEM_MB_ADD11 AY25 SB_MA_11
MEM_MB_ADD12 AV26 SB_MA_12
MEM_MB_ADD13 AR15 SB_MA_13
MEM_MB_ADD14 AY27 SB_MA_14
MEM_MB_ADD15 AY28 SB_MA_15
8 MEM_MB_WE_L MEM_MB_WE_L AK16 SB_WE#
8 MEM_MB_CAS_L MEM_MB_CAS_L AP16 SB_CAS#
8 MEM_MB_RAS_L MEM_MB_RAS_L AM18 SB_RAS#
8 MEM_MB_BANK0 MEM_MB_BANK0 AK17 SB_BS_0
8 MEM_MB_BANK1 MEM_MB_BANK1 AL18 SB_BS_1
8 MEM_MB_BANK2 MEM_MB_BANK2 AW28 SB_BS_2
8 MEM_MB_CS_L0 MEM_MB_CS_L0 AP17 SB_CS#_0
8 MEM_MB_CS_L1 MEM_MB_CS_L1 AN15 SB_CS#_1
AN17 SB_CS#_2
AL15 SB_CS#_3
8 MEM_MB_CKE0 MEM_MB_CKE0 AW29 SB_CKE_0
8 MEM_MB_CKE1 MEM_MB_CKE1 AY29 SB_CKE_1
AU28 SB_CKE_2
AU29 SB_CKE_3
8 MEM_MB_ODT0 MEM_MB_ODT0 AM17 SB_ODT_0
8 MEM_MB_ODT1 MEM_MB_ODT1 AL16 SB_ODT_1
AM16 SB_ODT_2
AK15 SB_ODT_3
8 MEM_MB_CLK_H0 MEM_MB_CLK_H0 AM20 SB_CK_0
8 MEM_MB_CLK_L0 MEM_MB_CLK_L0 AM21 SB_CK#_0
8 MEM_MB_CLK_H1 MEM_MB_CLK_H1 AP22 SB_CK_1
8 MEM_MB_CLK_L1 MEM_MB_CLK_L1 AP21 SB_CK#_1
AN20 SB_CK_2
AN21 SB_CK#_2
AP19 SB_CK_3
AP20 SB_CK#_3
AM26 SB_ECC_CB_0
AM25 SB_ECC_CB_1
AP25 SB_ECC_CB_2
AP26 SB_ECC_CB_3
AL26 SB_ECC_CB_4
AL25 SB_ECC_CB_5
AR26 SB_ECC_CB_6
AR25 SB_ECC_CB_7
DIMM_VREFB
AB40 SB_DIMM_VREFDQ
SB_DQ_0 AE34 MEM_MB_DATA0
SB_DQ_1 AE35 MEM_MB_DATA1
SB_DQ_2 AG35 MEM_MB_DATA2
SB_DQ_3 AH35 MEM_MB_DATA3
SB_DQ_4 AD34 MEM_MB_DATA4
SB_DQ_5 AD35 MEM_MB_DATA5
SB_DQ_6 AG34 MEM_MB_DATA6
SB_DQ_7 AH34 MEM_MB_DATA7
SB_DQ_8 AL34 MEM_MB_DATA8
SB_DQ_9 AL35 MEM_MB_DATA9
SB_DQ_10 AK31 MEM_MB_DATA10
SB_DQ_11 AL31 MEM_MB_DATA11
SB_DQ_12 AK34 MEM_MB_DATA12
SB_DQ_13 AK35 MEM_MB_DATA13
SB_DQ_14 AK32 MEM_MB_DATA14
SB_DQ_15 AL32 MEM_MB_DATA15
SB_DQ_16 AN34 MEM_MB_DATA16
SB_DQ_17 AP34 MEM_MB_DATA17
SB_DQ_18 AN31 MEM_MB_DATA18
SB_DQ_19 AP31 MEM_MB_DATA19
SB_DQ_20 AN35 MEM_MB_DATA20
SB_DQ_21 AP35 MEM_MB_DATA21
SB_DQ_22 AN32 MEM_MB_DATA22
SB_DQ_23 AP32 MEM_MB_DATA23
SB_DQ_24 AM29 MEM_MB_DATA24
SB_DQ_25 AM28 MEM_MB_DATA25
SB_DQ_26 AR29 MEM_MB_DATA26
SB_DQ_27 AR28 MEM_MB_DATA27
SB_DQ_28 AL29 MEM_MB_DATA28
SB_DQ_29 AL28 MEM_MB_DATA29
SB_DQ_30 AP29 MEM_MB_DATA30
SB_DQ_31 AP28 MEM_MB_DATA31
SB_DQ_32 AR12 MEM_MB_DATA32
SB_DQ_33 AP12 MEM_MB_DATA33
SB_DQ_34 AL13 MEM_MB_DATA34
SB_DQ_35 AL12 MEM_MB_DATA35
SB_DQ_36 AR13 MEM_MB_DATA36
SB_DQ_37 AP13 MEM_MB_DATA37
SB_DQ_38 AM13 MEM_MB_DATA38
SB_DQ_39 AM12 MEM_MB_DATA39
SB_DQ_40 AR9 MEM_MB_DATA40
SB_DQ_41 AP9 MEM_MB_DATA41
SB_DQ_42 AR6 MEM_MB_DATA42
SB_DQ_43 AP6 MEM_MB_DATA43
SB_DQ_44 AR10 MEM_MB_DATA44
SB_DQ_45 AP10 MEM_MB_DATA45
SB_DQ_46 AR7 MEM_MB_DATA46
SB_DQ_47 AP7 MEM_MB_DATA47
SB_DQ_48 AM9 MEM_MB_DATA48
SB_DQ_49 AL9 MEM_MB_DATA49
SB_DQ_50 AL6 MEM_MB_DATA50
SB_DQ_51 AL7 MEM_MB_DATA51
SB_DQ_52 AM10 MEM_MB_DATA52
SB_DQ_53 AL10 MEM_MB_DATA53
SB_DQ_54 AM6 MEM_MB_DATA54
SB_DQ_55 AM7 MEM_MB_DATA55
SB_DQ_56 AH6 MEM_MB_DATA56
SB_DQ_57 AH7 MEM_MB_DATA57
SB_DQ_58 AE6 MEM_MB_DATA58
SB_DQ_59 AE7 MEM_MB_DATA59
SB_DQ_60 AJ6 MEM_MB_DATA60
SB_DQ_61 AJ7 MEM_MB_DATA61
SB_DQ_62 AF6 MEM_MB_DATA62
SB_DQ_63 AF7 MEM_MB_DATA63
MEM_MB_DATA[63..0] 8
SB_DQS_0 AF35 MEM_MB_DQS_H0 MEM_MB_DQS_H0 8
SB_DQS_1 AL33 MEM_MB_DQS_H1 MEM_MB_DQS_H1 8
SB_DQS_2 AP33 MEM_MB_DQS_H2 MEM_MB_DQS_H2 8
SB_DQS_3 AN28 MEM_MB_DQS_H3 MEM_MB_DQS_H3 8
SB_DQS_4 AN12 MEM_MB_DQS_H4 MEM_MB_DQS_H4 8
SB_DQS_5 AP8 MEM_MB_DQS_H5 MEM_MB_DQS_H5 8
SB_DQS_6 AL8 MEM_MB_DQS_H6 MEM_MB_DQS_H6 8
SB_DQS_7 AG7 MEM_MB_DQS_H7 MEM_MB_DQS_H7 8
SB_DQS_8 AN25
SB_DQS#_0 AF34 MEM_MB_DQS_L0 MEM_MB_DQS_L0 8
SB_DQS#_1 AK33 MEM_MB_DQS_L1 MEM_MB_DQS_L1 8
SB_DQS#_2 AN33 MEM_MB_DQS_L2 MEM_MB_DQS_L2 8
SB_DQS#_3 AN29 MEM_MB_DQS_L3 MEM_MB_DQS_L3 8
SB_DQS#_4 AN13 MEM_MB_DQS_L4 MEM_MB_DQS_L4 8
SB_DQS#_5 AR8 MEM_MB_DQS_L5 MEM_MB_DQS_L5 8
SB_DQS#_6 AM8 MEM_MB_DQS_L6 MEM_MB_DQS_L6 8
SB_DQS#_7 AG6 MEM_MB_DQS_L7 MEM_MB_DQS_L7 8
SB_DQS#_8 AN26
5
4
3
2
1
D
C
B
A

MSI

MICRO-STAR INT'L CO.,LTD

MS-7817

Size	Document Description	Rev
Custom	CPU-Memory	10

Date: Tuesday, December 04, 2012 | Sheet 4 of 36

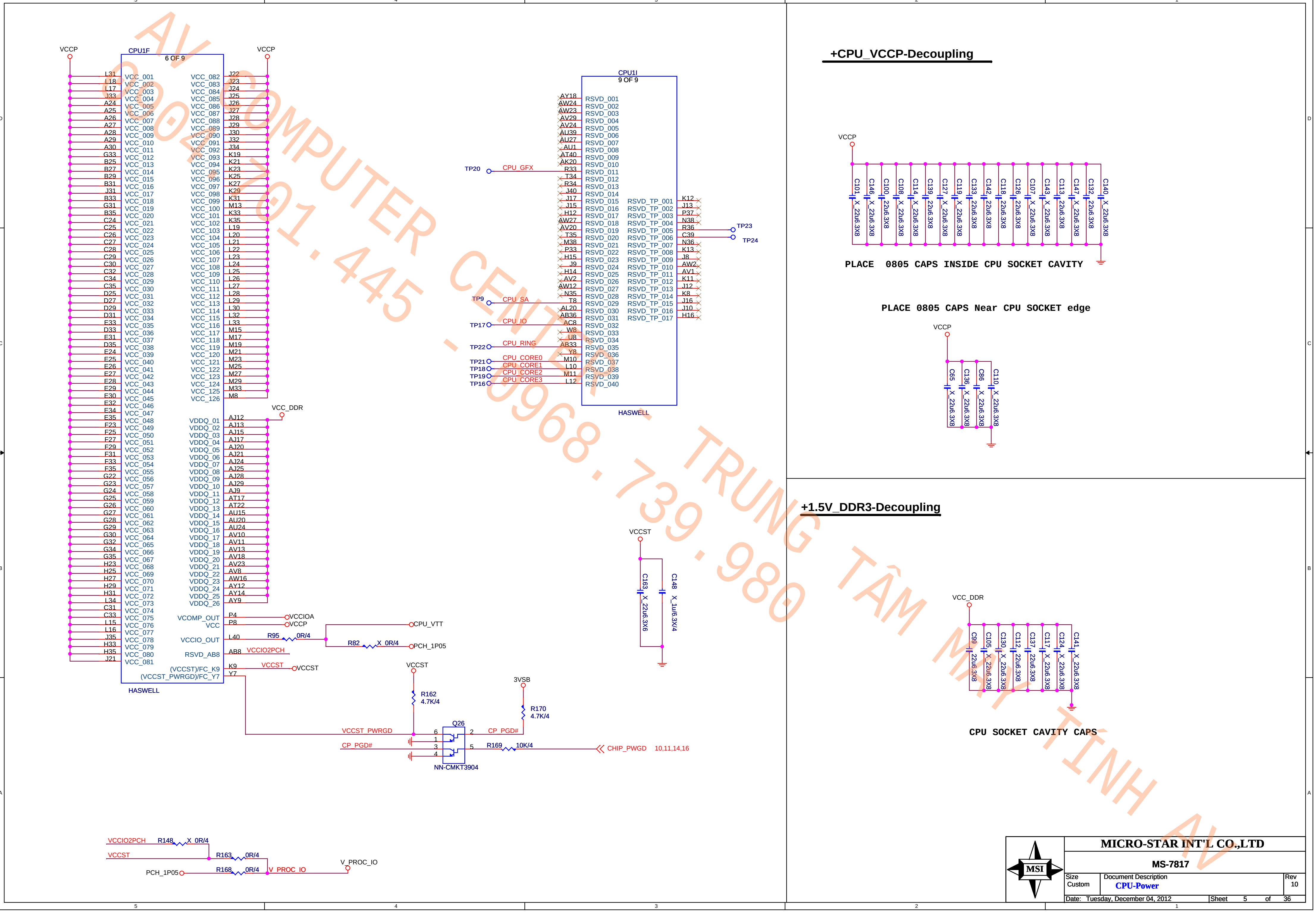

VCCP
CPU1F
6 OF 9
L31 VCC_001
L18 VCC_002
L17 VCC_003
J33 VCC_004
A24 VCC_005
A25 VCC_006
A26 VCC_007
A27 VCC_008
A28 VCC_009
A29 VCC_010
A30 VCC_011
G33 VCC_012
B25 VCC_013
B27 VCC_014
B29 VCC_015
B31 VCC_016
J31 VCC_017
B33 VCC_018
G31 VCC_019
B35 VCC_020
C24 VCC_021
C25 VCC_022
C26 VCC_023
C27 VCC_024
C28 VCC_025
C29 VCC_026
C30 VCC_027
C32 VCC_028
C34 VCC_029
C35 VCC_030
D25 VCC_031
D27 VCC_032
D29 VCC_033
D31 VCC_034
E33 VCC_035
D33 VCC_036
E31 VCC_037
D35 VCC_038
E24 VCC_039
E25 VCC_040
E26 VCC_041
E27 VCC_042
E28 VCC_043
E29 VCC_044
E30 VCC_045
E32 VCC_046
E34 VCC_047
E35 VCC_048
F23 VCC_049
F25 VCC_050
F27 VCC_051
F29 VCC_052
F31 VCC_053
F33 VCC_054
F35 VCC_055
G22 VCC_056
G23 VCC_057
G24 VCC_058
G25 VCC_059
G26 VCC_060
G27 VCC_061
G28 VCC_062
G29 VCC_063
G30 VCC_064
G32 VCC_065
G34 VCC_066
G35 VCC_067
H23 VCC_068
H25 VCC_069
H27 VCC_070
H29 VCC_071
H31 VCC_072
L34 VCC_073
C31 VCC_074
C33 VCC_075
L15 VCC_076
L16 VCC_077
J35 VCC_078
H33 VCC_079
H35 VCC_080
J21 VCC_081
VCC_082 J22
VCC_083 J23
VCC_084 J24
VCC_085 J25
VCC_086 J26
VCC_087 J27
VCC_088 J28
VCC_089 J29
VCC_090 J30
VCC_091 J32
VCC_092 J34
VCC_093 K19
VCC_094 K21
VCC_095 K23
VCC_096 K25
VCC_097 K27
VCC_098 K29
VCC_099 K31
VCC_100 M13
VCC_101 K33
VCC_102 K35
VCC_103 L19
VCC_104 L20
VCC_105 L21
VCC_106 L22
VCC_107 L23
VCC_108 L24
VCC_109 L25
VCC_110 L26
VCC_111 L27
VCC_112 L28
VCC_113 L29
VCC_114 L30
VCC_115 L32
VCC_116 L33
VCC_117 M15
VCC_118 M17
VCC_119 M19
VCC_120 M21
VCC_121 M23
VCC_122 M25
VCC_123 M27
VCC_124 M29
VCC_125 M33
VCC_126 M8
VCC_DDR
VDDQ_01 AJ12
VDDQ_02 AJ13
VDDQ_03 AJ15
VDDQ_04 AJ17
VDDQ_05 AJ20
VDDQ_06 AJ21
VDDQ_07 AJ24
VDDQ_08 AJ25
VDDQ_09 AJ28
VDDQ_10 AJ29
VDDQ_11 AJ9
VDDQ_12 AT17
VDDQ_13 AT22
VDDQ_14 AU15
VDDQ_15 AU20
VDDQ_16 AU24
VDDQ_17 AV10
VDDQ_18 AV11
VDDQ_19 AV13
VDDQ_20 AV18
VDDQ_21 AV23
VDDQ_22 AV8
VDDQ_23 AW16
VDDQ_24 AY12
VDDQ_25 AY14
VDDQ_26 AY9
VCOMP_OUT P4 VCCIOA
VCC P8 VCCP
VCCIO_OUT L40
RSVD_AB8 AB8 VCCIO2PCH
(VCCST)/FC_K9 K9 VCCST VCCST
(VCCST_PWRGD)/FC_Y7 Y7
HASWELL
R95 0R/4
CPU_VTT
R82 X_0R/4
PCH_1P05
VCCST
R162 4.7K/4
3VSB
R170 4.7K/4
VCCST_PWRGD
CP_PGD#
Q26
6 1 3 4 2 5
CP_PGD#
R169 10K/4
CHIP_PWGD 10,11,14,16
NN-CMKT3904
VCCIO2PCH R148 X_0R/4
VCCST R163 0R/4
PCH_1P05 R168 0R/4 V_PROC_IO
V_PROC_IO
CPU1I
9 OF 9
AY18 RSVD_001
AW24 RSVD_002
AW23 RSVD_003
AV29 RSVD_004
AV24 RSVD_005
AU39 RSVD_006
AU27 RSVD_007
AU1 RSVD_008
AT40 RSVD_009
AK20 RSVD_010
TP20 CPU_GFX R33 RSVD_011
T34 RSVD_012
R34 RSVD_013
J40 RSVD_014
J17 RSVD_015
J15 RSVD_016
H12 RSVD_017
AW27 RSVD_018
AV20 RSVD_019
T35 RSVD_020
M38 RSVD_021
P33 RSVD_022
H15 RSVD_023
J9 RSVD_024
H14 RSVD_025
AV2 RSVD_026
AW12 RSVD_027
N35 RSVD_028
TP9 CPU_SA T8 RSVD_029
AL20 RSVD_030
AB36 RSVD_031
TP17 CPU_IO AC8 RSVD_032
W8 RSVD_033
U8 RSVD_034
TP22 CPU_RING AB33 RSVD_035
Y8 RSVD_036
TP21 CPU_CORE0 M10 RSVD_037
TP18 CPU_CORE1 L10 RSVD_038
TP19 CPU_CORE2 M11 RSVD_039
TP16 CPU_CORE3 L12 RSVD_040
RSVD_TP_001 K12
RSVD_TP_002 J13
RSVD_TP_003 P37
RSVD_TP_004 N38
RSVD_TP_005 R36 TP23
RSVD_TP_006 C39 TP24
RSVD_TP_007 N36
RSVD_TP_008 K13
RSVD_TP_009 J8
RSVD_TP_010 AW2
RSVD_TP_011 AV1
RSVD_TP_012 K11
RSVD_TP_013 J12
RSVD_TP_014 K8
RSVD_TP_015 J16
RSVD_TP_016 J10
RSVD_TP_017 H16
HASWELL
VCCST
C163 X_22u6.3X6
C148 X_1u6.3X4
+CPU_VCCP-Decoupling
VCCP
C101 X_22u6.3X8
C146 X_22u6.3X8
C100 22u6.3X8
C108 X_22u6.3X8
C114 X_22u6.3X8
C139 22u6.3X8
C127 X_22u6.3X8
C119 X_22u6.3X8
C133 22u6.3X8
C142 22u6.3X8
C118 22u6.3X8
C126 22u6.3X8
C107 X_22u6.3X8
C143 X_22u6.3X8
C113 22u6.3X8
C147 X_22u6.3X8
C132 22u6.3X8
C140 X_22u6.3X8
PLACE 0805 CAPS INSIDE CPU SOCKET CAVITY
PLACE 0805 CAPS Near CPU SOCKET edge
VCCP
C65 X_22u6.3X8
C136 X_22u6.3X8
C86 X_22u6.3X8
C110 X_22u6.3X8
+1.5V_DDR3-Decoupling
VCC_DDR
C99 22u6.3X8
C105 X_22u6.3X8
C130 X_22u6.3X8
C112 X_22u6.3X8
C137 22u6.3X8
C117 X_22u6.3X8
C124 X_22u6.3X8
C141 X_22u6.3X8
CPU SOCKET CAVITY CAPS
5 4 3 2 1
D C B A
MSI

MICRO-STAR INT'L CO.,LTD

MS-7817

Size	Document Description	Rev
Custom	CPU-Power	10

Date: Tuesday, December 04, 2012 | Sheet 5 of 36

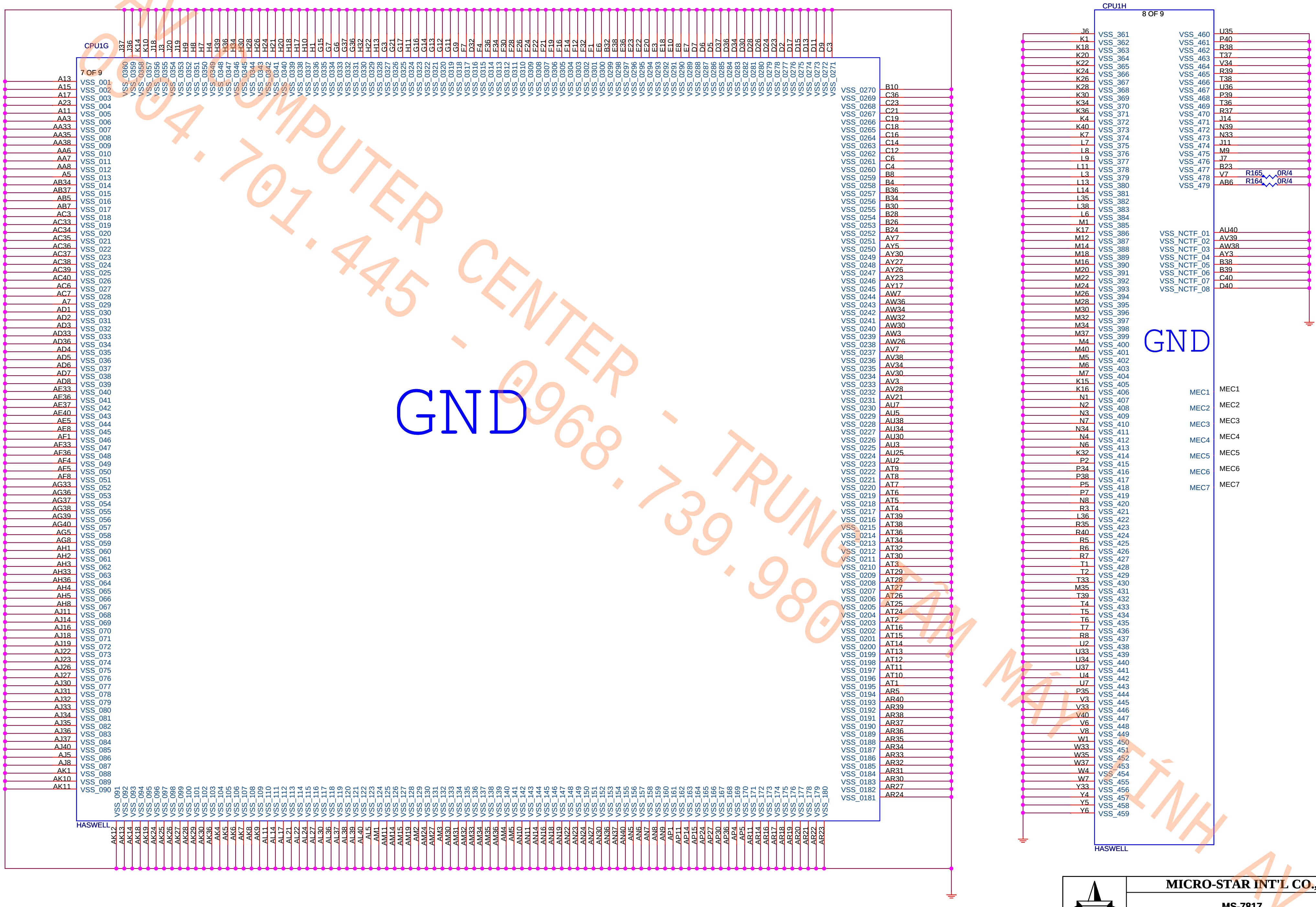
CPU1G
7 OF 9
HASWELL
GND
A13 VSS_001
A15 VSS_002
A17 VSS_003
A23 VSS_004
A11 VSS_005
AA3 VSS_006
AA33 VSS_007
AA35 VSS_008
AA38 VSS_009
AA6 VSS_010
AA7 VSS_011
AA8 VSS_012
A5 VSS_013
AB34 VSS_014
AB37 VSS_015
AB5 VSS_016
AB7 VSS_017
AC3 VSS_018
AC33 VSS_019
AC34 VSS_020
AC35 VSS_021
AC36 VSS_022
AC37 VSS_023
AC38 VSS_024
AC39 VSS_025
AC40 VSS_026
AC6 VSS_027
AC7 VSS_028
A7 VSS_029
AD1 VSS_030
AD2 VSS_031
AD3 VSS_032
AD33 VSS_033
AD36 VSS_034
AD4 VSS_035
AD5 VSS_036
AD6 VSS_037
AD7 VSS_038
AD8 VSS_039
AE33 VSS_040
AE36 VSS_041
AE37 VSS_042
AE40 VSS_043
AE5 VSS_044
AE8 VSS_045
AF1 VSS_046
AF33 VSS_047
AF36 VSS_048
AF4 VSS_049
AF5 VSS_050
AF8 VSS_051
AG33 VSS_052
AG36 VSS_053
AG37 VSS_054
AG38 VSS_055
AG39 VSS_056
AG40 VSS_057
AG5 VSS_058
AG8 VSS_059
AH1 VSS_060
AH2 VSS_061
AH3 VSS_062
AH33 VSS_063
AH36 VSS_064
AH4 VSS_065
AH5 VSS_066
AH8 VSS_067
AJ11 VSS_068
AJ14 VSS_069
AJ16 VSS_070
AJ18 VSS_071
AJ19 VSS_072
AJ22 VSS_073
AJ23 VSS_074
AJ26 VSS_075
AJ27 VSS_076
AJ30 VSS_077
AJ31 VSS_078
AJ32 VSS_079
AJ33 VSS_080
AJ34 VSS_081
AJ35 VSS_082
AJ36 VSS_083
AJ37 VSS_084
AJ40 VSS_085
AJ5 VSS_086
AJ8 VSS_087
AK1 VSS_088
AK10 VSS_089
AK11 VSS_090
AK12 VSS_091
AK13 VSS_092
AK14 VSS_093
AK18 VSS_094
AK19 VSS_095
AK24 VSS_096
AK25 VSS_097
AK26 VSS_098
AK27 VSS_099
AK28 VSS_100
AK29 VSS_101
AK30 VSS_102
AK36 VSS_103
AK4 VSS_104
AK5 VSS_105
AK6 VSS_106
AK7 VSS_107
AK8 VSS_108
AK9 VSS_109
AL11 VSS_110
AL14 VSS_111
AL17 VSS_112
AL21 VSS_113
AL22 VSS_114
AL24 VSS_115
AL27 VSS_116
AL30 VSS_117
AL36 VSS_118
AL37 VSS_119
AL38 VSS_120
AL39 VSS_121
AL40 VSS_122
AL5 VSS_123
AM1 VSS_124
AM11 VSS_125
AM14 VSS_126
AM15 VSS_127
AM19 VSS_128
AM2 VSS_129
AM24 VSS_130
AM27 VSS_131
AM3 VSS_132
AM30 VSS_133
AM31 VSS_134
AM32 VSS_135
AM33 VSS_136
AM34 VSS_137
AM35 VSS_138
AM36 VSS_139
AM4 VSS_140
AM5 VSS_141
AN10 VSS_142
AN11 VSS_143
AN14 VSS_144
AN16 VSS_145
AN18 VSS_146
AN19 VSS_147
AN22 VSS_148
AN23 VSS_149
AN24 VSS_150
AN27 VSS_151
AN30 VSS_152
AN36 VSS_153
AN37 VSS_154
AN40 VSS_155
AN5 VSS_156
AN6 VSS_157
AN7 VSS_158
AN8 VSS_159
AN9 VSS_160
AP1 VSS_161
AP11 VSS_162
AP14 VSS_163
AP15 VSS_164
AP24 VSS_165
AP27 VSS_166
AP30 VSS_167
AP36 VSS_168
AP4 VSS_169
AP5 VSS_170
AR11 VSS_171
AR14 VSS_172
AR16 VSS_173
AR17 VSS_174
AR18 VSS_175
AR19 VSS_176
AR20 VSS_177
AR21 VSS_178
AR22 VSS_179
AR23 VSS_180
VSS_0270 B10
VSS_0269 C36
VSS_0268 C23
VSS_0267 C21
VSS_0266 C19
VSS_0265 C18
VSS_0264 C16
VSS_0263 C14
VSS_0262 C12
VSS_0261 C6
VSS_0260 C4
VSS_0259 B8
VSS_0258 B4
VSS_0257 B36
VSS_0256 B34
VSS_0255 B30
VSS_0254 B28
VSS_0253 B26
VSS_0252 B24
VSS_0251 AY7
VSS_0250 AY5
VSS_0249 AY30
VSS_0248 AY27
VSS_0247 AY26
VSS_0246 AY23
VSS_0245 AY17
VSS_0244 AW7
VSS_0243 AW36
VSS_0242 AW34
VSS_0241 AW32
VSS_0240 AW30
VSS_0239 AW3
VSS_0238 AW26
VSS_0237 AV7
VSS_0236 AV38
VSS_0235 AV34
VSS_0234 AV30
VSS_0233 AV3
VSS_0232 AV28
VSS_0231 AV21
VSS_0230 AU7
VSS_0229 AU5
VSS_0228 AU38
VSS_0227 AU34
VSS_0226 AU30
VSS_0225 AU3
VSS_0224 AU25
VSS_0223 AU2
VSS_0222 AT9
VSS_0221 AT8
VSS_0220 AT7
VSS_0219 AT6
VSS_0218 AT5
VSS_0217 AT4
VSS_0216 AT39
VSS_0215 AT38
VSS_0214 AT36
VSS_0213 AT34
VSS_0212 AT32
VSS_0211 AT30
VSS_0210 AT3
VSS_0209 AT29
VSS_0208 AT28
VSS_0207 AT27
VSS_0206 AT26
VSS_0205 AT25
VSS_0204 AT24
VSS_0203 AT2
VSS_0202 AT16
VSS_0201 AT15
VSS_0200 AT14
VSS_0199 AT13
VSS_0198 AT12
VSS_0197 AT11
VSS_0196 AT10
VSS_0195 AT1
VSS_0194 AR5
VSS_0193 AR40
VSS_0192 AR39
VSS_0191 AR38
VSS_0190 AR37
VSS_0189 AR36
VSS_0188 AR35
VSS_0187 AR34
VSS_0186 AR33
VSS_0185 AR32
VSS_0184 AR31
VSS_0183 AR30
VSS_0182 AR27
VSS_0181 AR24
J37 VSS_0360
J36 VSS_0359
K14 VSS_0358
K10 VSS_0357
J18 VSS_0356
J3 VSS_0355
J20 VSS_0354
J19 VSS_0353
H9 VSS_0352
H8 VSS_0351
H7 VSS_0350
H4 VSS_0349
H39 VSS_0348
H36 VSS_0347
H34 VSS_0346
H30 VSS_0345
H28 VSS_0344
H26 VSS_0343
H24 VSS_0342
H21 VSS_0341
H20 VSS_0340
H18 VSS_0339
H17 VSS_0338
H10 VSS_0337
H1 VSS_0336
G15 VSS_0335
G7 VSS_0334
G6 VSS_0333
G37 VSS_0332
G36 VSS_0331
H32 VSS_0330
H22 VSS_0329
H13 VSS_0328
G3 VSS_0327
G21 VSS_0326
G17 VSS_0325
H11 VSS_0324
G16 VSS_0323
G14 VSS_0322
G13 VSS_0321
G12 VSS_0320
G11 VSS_0319
G9 VSS_0318
F7 VSS_0317
D32 VSS_0316
F4 VSS_0315
F36 VSS_0314
F34 VSS_0313
F30 VSS_0312
F28 VSS_0311
F26 VSS_0310
F24 VSS_0309
F22 VSS_0308
F21 VSS_0307
F19 VSS_0306
F16 VSS_0305
F14 VSS_0304
F12 VSS_0303
F32 VSS_0302
F1 VSS_0301
E6 VSS_0300
B32 VSS_0299
E38 VSS_0298
E36 VSS_0297
E23 VSS_0296
E22 VSS_0295
E20 VSS_0294
E3 VSS_0293
E18 VSS_0292
E10 VSS_0291
E8 VSS_0290
E7 VSS_0289
D7 VSS_0288
D6 VSS_0287
D5 VSS_0286
D37 VSS_0285
D36 VSS_0284
D34 VSS_0283
D30 VSS_0282
D28 VSS_0281
D26 VSS_0280
D24 VSS_0279
D23 VSS_0278
D2 VSS_0277
D17 VSS_0276
D15 VSS_0275
D13 VSS_0274
D11 VSS_0273
D9 VSS_0272
C3 VSS_0271
CPU1H
8 OF 9
HASWELL
GND
J6 VSS_361
K1 VSS_362
K18 VSS_363
K20 VSS_364
K22 VSS_365
K24 VSS_366
K26 VSS_367
K28 VSS_368
K30 VSS_369
K34 VSS_370
K36 VSS_371
K4 VSS_372
K40 VSS_373
K7 VSS_374
L7 VSS_375
L8 VSS_376
L9 VSS_377
L11 VSS_378
L3 VSS_379
L13 VSS_380
L14 VSS_381
L35 VSS_382
L38 VSS_383
L6 VSS_384
M1 VSS_385
K17 VSS_386
M12 VSS_387
M14 VSS_388
M18 VSS_389
M16 VSS_390
M20 VSS_391
M22 VSS_392
M24 VSS_393
M26 VSS_394
M28 VSS_395
M30 VSS_396
M32 VSS_397
M34 VSS_398
M37 VSS_399
M4 VSS_400
M40 VSS_401
M5 VSS_402
M6 VSS_403
M7 VSS_404
K15 VSS_405
K16 VSS_406
N1 VSS_407
N2 VSS_408
N3 VSS_409
N7 VSS_410
N34 VSS_411
N4 VSS_412
N6 VSS_413
K32 VSS_414
P2 VSS_415
P34 VSS_416
P38 VSS_417
P5 VSS_418
P7 VSS_419
N8 VSS_420
R3 VSS_421
L36 VSS_422
R35 VSS_423
R40 VSS_424
R5 VSS_425
R6 VSS_426
R7 VSS_427
T1 VSS_428
T2 VSS_429
T33 VSS_430
M35 VSS_431
T39 VSS_432
T4 VSS_433
T5 VSS_434
T6 VSS_435
T7 VSS_436
R8 VSS_437
U2 VSS_438
U33 VSS_439
U34 VSS_440
U37 VSS_441
U4 VSS_442
U7 VSS_443
P35 VSS_444
V3 VSS_445
V33 VSS_446
V40 VSS_447
V6 VSS_448
V8 VSS_449
W1 VSS_450
W33 VSS_451
W35 VSS_452
W37 VSS_453
W4 VSS_454
W7 VSS_455
Y33 VSS_456
Y4 VSS_457
Y5 VSS_458
Y6 VSS_459
VSS_460 U35
VSS_461 P40
VSS_462 R38
VSS_463 T37
VSS_464 V34
VSS_465 R39
VSS_466 T38
VSS_467 U36
VSS_468 P39
VSS_469 T36
VSS_470 R37
VSS_471 J14
VSS_472 N39
VSS_473 N33
VSS_474 J11
VSS_475 M9
VSS_476 J7
VSS_477 B23
VSS_478 V7
VSS_479 AB6
R165 0R/4
R164 0R/4
VSS_NCTF_01 AU40
VSS_NCTF_02 AV39
VSS_NCTF_03 AW38
VSS_NCTF_04 AY3
VSS_NCTF_05 B38
VSS_NCTF_06 B39
VSS_NCTF_07 C40
VSS_NCTF_08 D40
MEC1 MEC1
MEC2 MEC2
MEC3 MEC3
MEC4 MEC4
MEC5 MEC5
MEC6 MEC6
MEC7 MEC7
5
4
3
2
1
D
C
B
A

AV COMPUTER 0904.701.445 - 0968.739.980 - TRUNG TÂM MÁY TÍNH AV

MICRO-STAR INT'L CO.,LTD

MSI

MS-7817

Size	Document Description	Rev
Custom	**CPU-GND**	10

Date: Tuesday, December 04, 2012 | Sheet 6 of 36

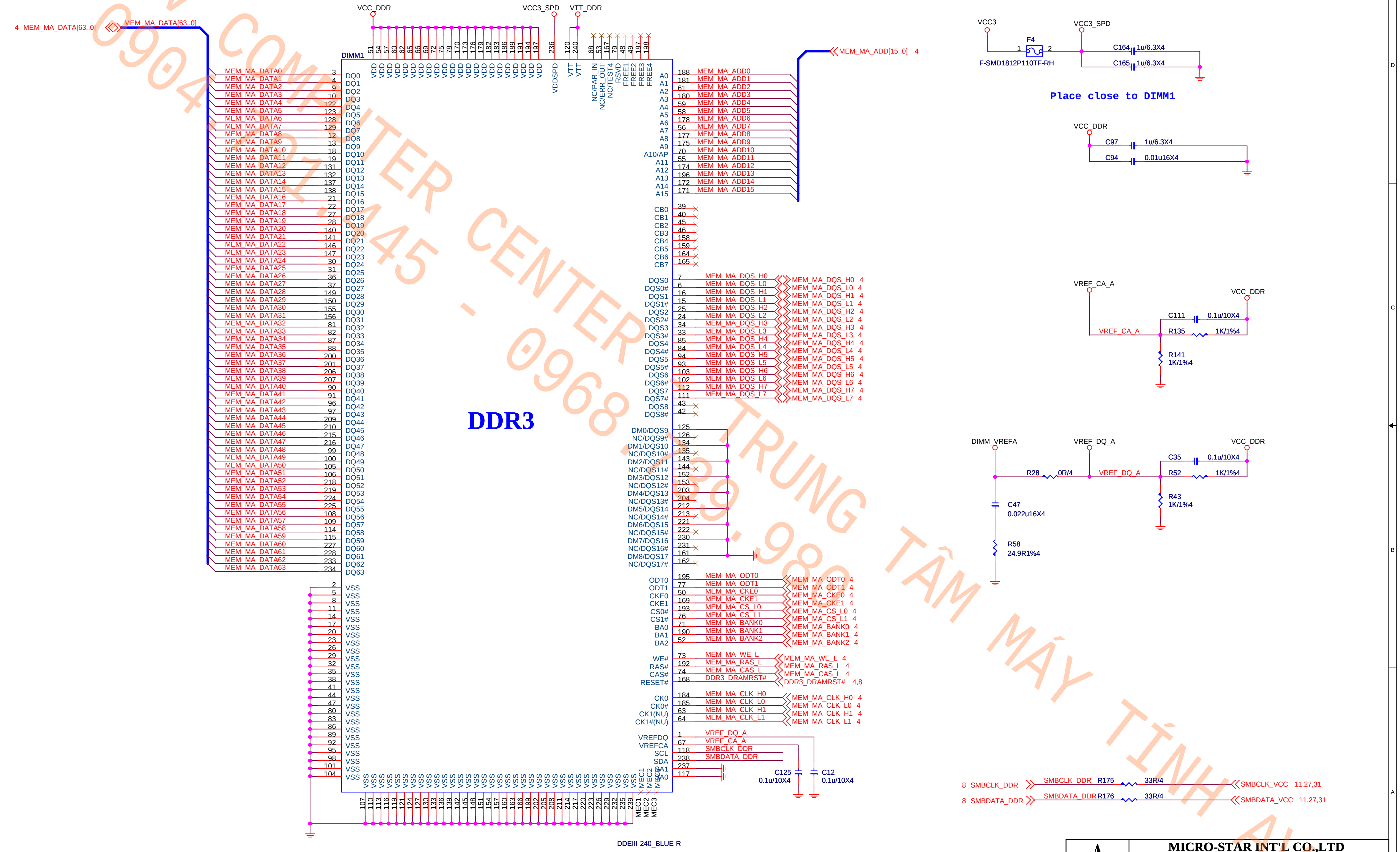
DDR3
DIMM1
DDEIII-240_BLUE-R
4 MEM_MA_DATA[63..0]
MEM_MA_DATA[63..0]
MEM_MA_ADD[15..0] 4
VCC_DDR
VCC3_SPD
VTT_DDR
VDD 51 54 57 60 62 65 66 69 72 75 78 170 173 176 179 182 183 186 189 191 194 197
VDDSPD 236
VTT 120 240
NC/PAR_IN 68
NC/ERR_OUT 53
NC/TEST4 167
RSVD 79
FREE1 48
FREE2 49
FREE3 187
FREE4 198
MEM_MA_DATA0 … MEM_MA_DATA63
DQ0 … DQ63
3 4 9 10 122 123 128 129 12 13 18 19 131 132 137 138 21 22 27 28 140 141 146 147 30 31 36 37 149 150 155 156 81 82 87 88 200 201 206 207 90 91 96 97 209 210 215 216 99 100 105 106 218 219 224 225 108 109 114 115 227 228 233 234
A0 … A9, A10/AP, A11 … A15
188 181 61 180 59 58 178 56 177 175 70 55 174 196 172 171
MEM_MA_ADD0 … MEM_MA_ADD15
CB0 … CB7
39 40 45 46 158 159 164 165
DQS0 DQS0# DQS1 DQS1# DQS2 DQS2# DQS3 DQS3# DQS4 DQS4# DQS5 DQS5# DQS6 DQS6# DQS7 DQS7# DQS8 DQS8#
7 6 16 15 25 24 34 33 85 84 94 93 103 102 112 111 43 42
MEM_MA_DQS_H0 4
MEM_MA_DQS_L0 4
MEM_MA_DQS_H1 4
MEM_MA_DQS_L1 4
MEM_MA_DQS_H2 4
MEM_MA_DQS_L2 4
MEM_MA_DQS_H3 4
MEM_MA_DQS_L3 4
MEM_MA_DQS_H4 4
MEM_MA_DQS_L4 4
MEM_MA_DQS_H5 4
MEM_MA_DQS_L5 4
MEM_MA_DQS_H6 4
MEM_MA_DQS_L6 4
MEM_MA_DQS_H7 4
MEM_MA_DQS_L7 4
DM0/DQS9 NC/DQS9# DM1/DQS10 NC/DQS10# DM2/DQS11 NC/DQS11# DM3/DQS12 NC/DQS12# DM4/DQS13 NC/DQS13# DM5/DQS14 NC/DQS14# DM6/DQS15 NC/DQS15# DM7/DQS16 NC/DQS16# DM8/DQS17 NC/DQS17#
125 126 134 135 143 144 152 153 203 204 212 213 221 222 230 231 161 162
ODT0 195 MEM_MA_ODT0 4
ODT1 77 MEM_MA_ODT1 4
CKE0 50 MEM_MA_CKE0 4
CKE1 169 MEM_MA_CKE1 4
CS0# 193 MEM_MA_CS_L0 4
CS1# 76 MEM_MA_CS_L1 4
BA0 71 MEM_MA_BANK0 4
BA1 190 MEM_MA_BANK1 4
BA2 52 MEM_MA_BANK2 4
WE# 73 MEM_MA_WE_L 4
RAS# 192 MEM_MA_RAS_L 4
CAS# 74 MEM_MA_CAS_L 4
RESET# 168 DDR3_DRAMRST# 4,8
CK0 184 MEM_MA_CLK_H0 4
CK0# 185 MEM_MA_CLK_L0 4
CK1(NU) 63 MEM_MA_CLK_H1 4
CK1#(NU) 64 MEM_MA_CLK_L1 4
VREFDQ 1 VREF_DQ_A
VREFCA 67 VREF_CA_A
SCL 118 SMBCLK_DDR
SDA 238 SMBDATA_DDR
SA1 237
SA0 117
C125 0.1u/10X4
C12 0.1u/10X4
VSS 2 5 8 11 14 17 20 23 26 29 32 35 38 41 44 47 80 83 86 89 92 95 98 101 104
VSS 107 110 113 116 119 121 124 127 130 133 136 139 142 145 148 151 154 157 160 163 166 199 202 205 208 211 214 217 220 223 226 229 232 235 239
MEC1 MEC2 MEC3
VCC3
F4
1 2
F-SMD1812P110TF-RH
VCC3_SPD
C164 1u/6.3X4
C165 1u/6.3X4
Place close to DIMM1
VCC_DDR
C97 1u/6.3X4
C94 0.01u16X4
VREF_CA_A
VCC_DDR
C111 0.1u/10X4
VREF_CA_A
R135 1K/1%4
R141 1K/1%4
DIMM_VREFA
VREF_DQ_A
VCC_DDR
C35 0.1u/10X4
R28 0R/4
VREF_DQ_A
R52 1K/1%4
C47 0.022u16X4
R43 1K/1%4
R58 24.9R1%4
8 SMBCLK_DDR
SMBCLK_DDR R175 33R/4
SMBCLK_VCC 11,27,31
8 SMBDATA_DDR
SMBDATA_DDR R176 33R/4
SMBDATA_VCC 11,27,31

MICRO-STAR INT'L CO.,LTD

MS-7817

Size	Document Description	Rev
Custom	DDR3 Chanel-A DIMM1/2	10

Date: Tuesday, December 04, 2012 Sheet 7 of 36

DDRIII DIMM_B0

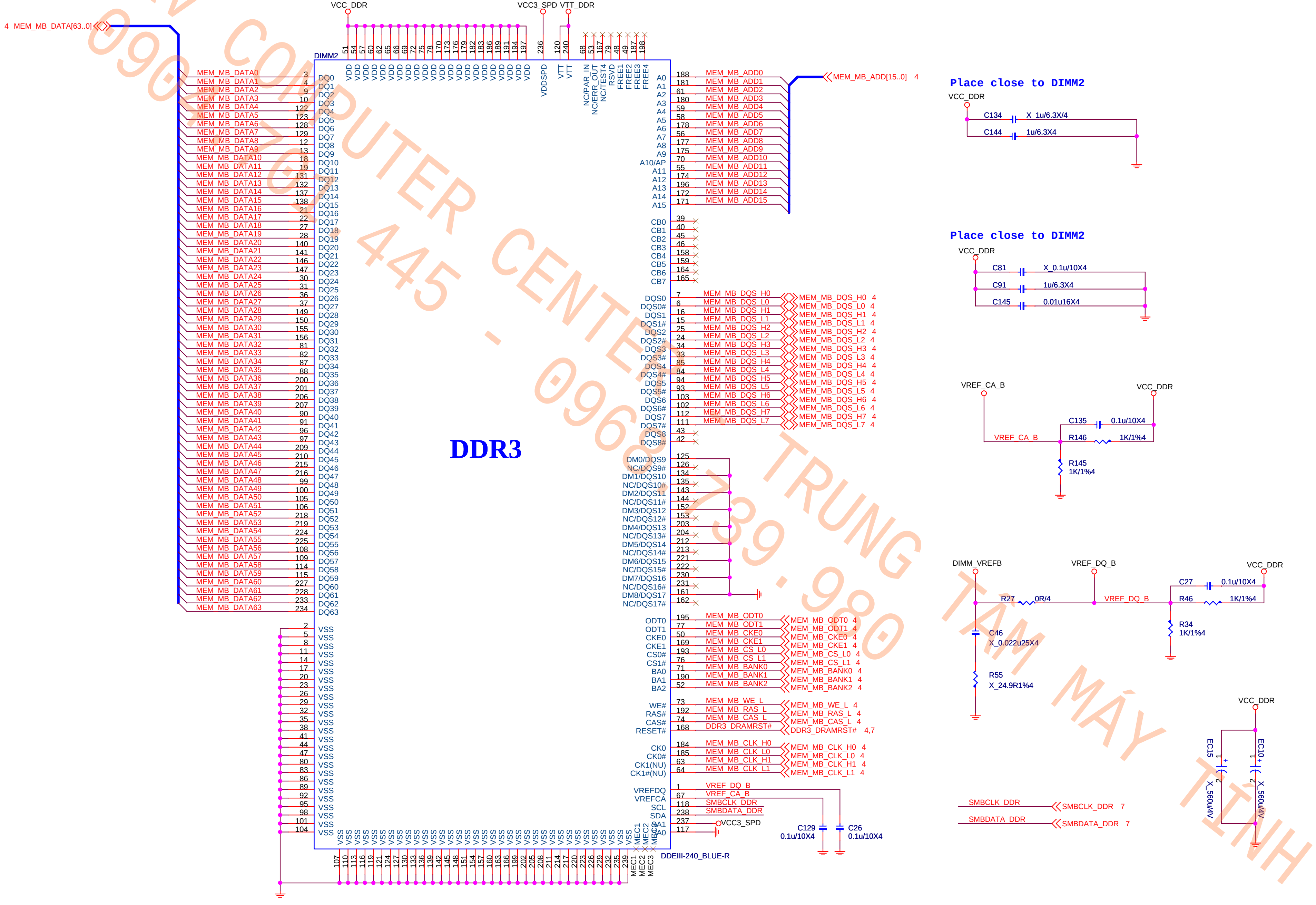
4 MEM_MB_DATA[63..0]
DIMM2
DDR3
DDEIII-240_BLUE-R
VCC_DDR
VCC3_SPD
VTT_DDR
VDD 51 54 57 60 62 65 66 69 72 75 78 170 173 176 179 182 183 186 189 191 194 197
VDDSPD 236
VTT 120
VTT 240
NC/PAR_IN 68
NC/ERR_OUT 53
NC/TEST4 167
RSVD 79
FREE1 48
FREE2 49
FREE3 187
FREE4 198
MEM_MB_DATA0 3 DQ0
MEM_MB_DATA1 4 DQ1
MEM_MB_DATA2 9 DQ2
MEM_MB_DATA3 10 DQ3
MEM_MB_DATA4 122 DQ4
MEM_MB_DATA5 123 DQ5
MEM_MB_DATA6 128 DQ6
MEM_MB_DATA7 129 DQ7
MEM_MB_DATA8 12 DQ8
MEM_MB_DATA9 13 DQ9
MEM_MB_DATA10 18 DQ10
MEM_MB_DATA11 19 DQ11
MEM_MB_DATA12 131 DQ12
MEM_MB_DATA13 132 DQ13
MEM_MB_DATA14 137 DQ14
MEM_MB_DATA15 138 DQ15
MEM_MB_DATA16 21 DQ16
MEM_MB_DATA17 22 DQ17
MEM_MB_DATA18 27 DQ18
MEM_MB_DATA19 28 DQ19
MEM_MB_DATA20 140 DQ20
MEM_MB_DATA21 141 DQ21
MEM_MB_DATA22 146 DQ22
MEM_MB_DATA23 147 DQ23
MEM_MB_DATA24 30 DQ24
MEM_MB_DATA25 31 DQ25
MEM_MB_DATA26 36 DQ26
MEM_MB_DATA27 37 DQ27
MEM_MB_DATA28 149 DQ28
MEM_MB_DATA29 150 DQ29
MEM_MB_DATA30 155 DQ30
MEM_MB_DATA31 156 DQ31
MEM_MB_DATA32 81 DQ32
MEM_MB_DATA33 82 DQ33
MEM_MB_DATA34 87 DQ34
MEM_MB_DATA35 88 DQ35
MEM_MB_DATA36 200 DQ36
MEM_MB_DATA37 201 DQ37
MEM_MB_DATA38 206 DQ38
MEM_MB_DATA39 207 DQ39
MEM_MB_DATA40 90 DQ40
MEM_MB_DATA41 91 DQ41
MEM_MB_DATA42 96 DQ42
MEM_MB_DATA43 97 DQ43
MEM_MB_DATA44 209 DQ44
MEM_MB_DATA45 210 DQ45
MEM_MB_DATA46 215 DQ46
MEM_MB_DATA47 216 DQ47
MEM_MB_DATA48 99 DQ48
MEM_MB_DATA49 100 DQ49
MEM_MB_DATA50 105 DQ50
MEM_MB_DATA51 106 DQ51
MEM_MB_DATA52 218 DQ52
MEM_MB_DATA53 219 DQ53
MEM_MB_DATA54 224 DQ54
MEM_MB_DATA55 225 DQ55
MEM_MB_DATA56 108 DQ56
MEM_MB_DATA57 109 DQ57
MEM_MB_DATA58 114 DQ58
MEM_MB_DATA59 115 DQ59
MEM_MB_DATA60 227 DQ60
MEM_MB_DATA61 228 DQ61
MEM_MB_DATA62 233 DQ62
MEM_MB_DATA63 234 DQ63
VSS 2 5 8 11 14 17 20 23 26 29 32 35 38 41 44 47 80 83 86 89 92 95 98 101 104
VSS 107 110 113 116 119 121 124 127 130 133 136 139 142 145 148 151 154 157 160 163 166 199 202 205 208 211 214 217 220 223 226 229 232 235 239
MEC1 MEC2 MEC3
A0 188 MEM_MB_ADD0
A1 181 MEM_MB_ADD1
A2 61 MEM_MB_ADD2
A3 180 MEM_MB_ADD3
A4 59 MEM_MB_ADD4
A5 58 MEM_MB_ADD5
A6 178 MEM_MB_ADD6
A7 56 MEM_MB_ADD7
A8 177 MEM_MB_ADD8
A9 175 MEM_MB_ADD9
A10/AP 70 MEM_MB_ADD10
A11 55 MEM_MB_ADD11
A12 174 MEM_MB_ADD12
A13 196 MEM_MB_ADD13
A14 172 MEM_MB_ADD14
A15 171 MEM_MB_ADD15
MEM_MB_ADD[15..0] 4
CB0 39
CB1 40
CB2 45
CB3 46
CB4 158
CB5 159
CB6 164
CB7 165
DQS0 7 MEM_MB_DQS_H0
DQS0# 6 MEM_MB_DQS_L0
DQS1 16 MEM_MB_DQS_H1
DQS1# 15 MEM_MB_DQS_L1
DQS2 25 MEM_MB_DQS_H2
DQS2# 24 MEM_MB_DQS_L2
DQS3 34 MEM_MB_DQS_H3
DQS3# 33 MEM_MB_DQS_L3
DQS4 85 MEM_MB_DQS_H4
DQS4# 84 MEM_MB_DQS_L4
DQS5 94 MEM_MB_DQS_H5
DQS5# 93 MEM_MB_DQS_L5
DQS6 103 MEM_MB_DQS_H6
DQS6# 102 MEM_MB_DQS_L6
DQS7 112 MEM_MB_DQS_H7
DQS7# 111 MEM_MB_DQS_L7
DQS8 43
DQS8# 42
MEM_MB_DQS_H0 4
MEM_MB_DQS_L0 4
MEM_MB_DQS_H1 4
MEM_MB_DQS_L1 4
MEM_MB_DQS_H2 4
MEM_MB_DQS_L2 4
MEM_MB_DQS_H3 4
MEM_MB_DQS_L3 4
MEM_MB_DQS_H4 4
MEM_MB_DQS_L4 4
MEM_MB_DQS_H5 4
MEM_MB_DQS_L5 4
MEM_MB_DQS_H6 4
MEM_MB_DQS_L6 4
MEM_MB_DQS_H7 4
MEM_MB_DQS_L7 4
DM0/DQS9 125
NC/DQS9# 126
DM1/DQS10 134
NC/DQS10# 135
DM2/DQS11 143
NC/DQS11# 144
DM3/DQS12 152
NC/DQS12# 153
DM4/DQS13 203
NC/DQS13# 204
DM5/DQS14 212
NC/DQS14# 213
DM6/DQS15 221
NC/DQS15# 222
DM7/DQS16 230
NC/DQS16# 231
DM8/DQS17 161
NC/DQS17# 162
ODT0 195 MEM_MB_ODT0
ODT1 77 MEM_MB_ODT1
CKE0 50 MEM_MB_CKE0
CKE1 169 MEM_MB_CKE1
CS0# 193 MEM_MB_CS_L0
CS1# 76 MEM_MB_CS_L1
BA0 71 MEM_MB_BANK0
BA1 190 MEM_MB_BANK1
BA2 52 MEM_MB_BANK2
MEM_MB_ODT0 4
MEM_MB_ODT1 4
MEM_MB_CKE0 4
MEM_MB_CKE1 4
MEM_MB_CS_L0 4
MEM_MB_CS_L1 4
MEM_MB_BANK0 4
MEM_MB_BANK1 4
MEM_MB_BANK2 4
WE# 73 MEM_MB_WE_L
RAS# 192 MEM_MB_RAS_L
CAS# 74 MEM_MB_CAS_L
RESET# 168 DDR3_DRAMRST#
MEM_MB_WE_L 4
MEM_MB_RAS_L 4
MEM_MB_CAS_L 4
DDR3_DRAMRST# 4,7
CK0 184 MEM_MB_CLK_H0
CK0# 185 MEM_MB_CLK_L0
CK1(NU) 63 MEM_MB_CLK_H1
CK1#(NU) 64 MEM_MB_CLK_L1
MEM_MB_CLK_H0 4
MEM_MB_CLK_L0 4
MEM_MB_CLK_H1 4
MEM_MB_CLK_L1 4
VREFDQ 1 VREF_DQ_B
VREFCA 67 VREF_CA_B
SCL 118 SMBCLK_DDR
SDA 238 SMBDATA_DDR
SA1 237 VCC3_SPD
SA0 117
C129 0.1u/10X4
C26 0.1u/10X4
Place close to DIMM2
VCC_DDR
C134 X_1u/6.3X/4
C144 1u/6.3X4
Place close to DIMM2
VCC_DDR
C81 X_0.1u/10X4
C91 1u/6.3X4
C145 0.01u16X4
VREF_CA_B
VCC_DDR
C135 0.1u/10X4
VREF_CA_B
R146 1K/1%4
R145 1K/1%4
DIMM_VREFB
VREF_DQ_B
VCC_DDR
C27 0.1u/10X4
R27 0R/4
VREF_DQ_B
R46 1K/1%4
R34 1K/1%4
C46 X_0.022u25X4
R55 X_24.9R1%4
SMBCLK_DDR
SMBDATA_DDR
SMBCLK_DDR 7
SMBDATA_DDR 7
VCC_DDR
EC15 1 + 2 X_560u/4V
EC10 1 + 2 X_560u/4V

MICRO-STAR INT'L CO.,LTD

MS-7817

Size	Document Description	Rev
Custom	**DDR3 Chanel-B DIMM3/4**	10

Date: Tuesday, December 04, 2012 | Sheet 8 of 36

USB 2.0 ports 6,7,12 and 13 are disabled on 10 port SKUs.
Only USB 3.0 ports 1 and 2 are enabled.
pcie port7,8 NA

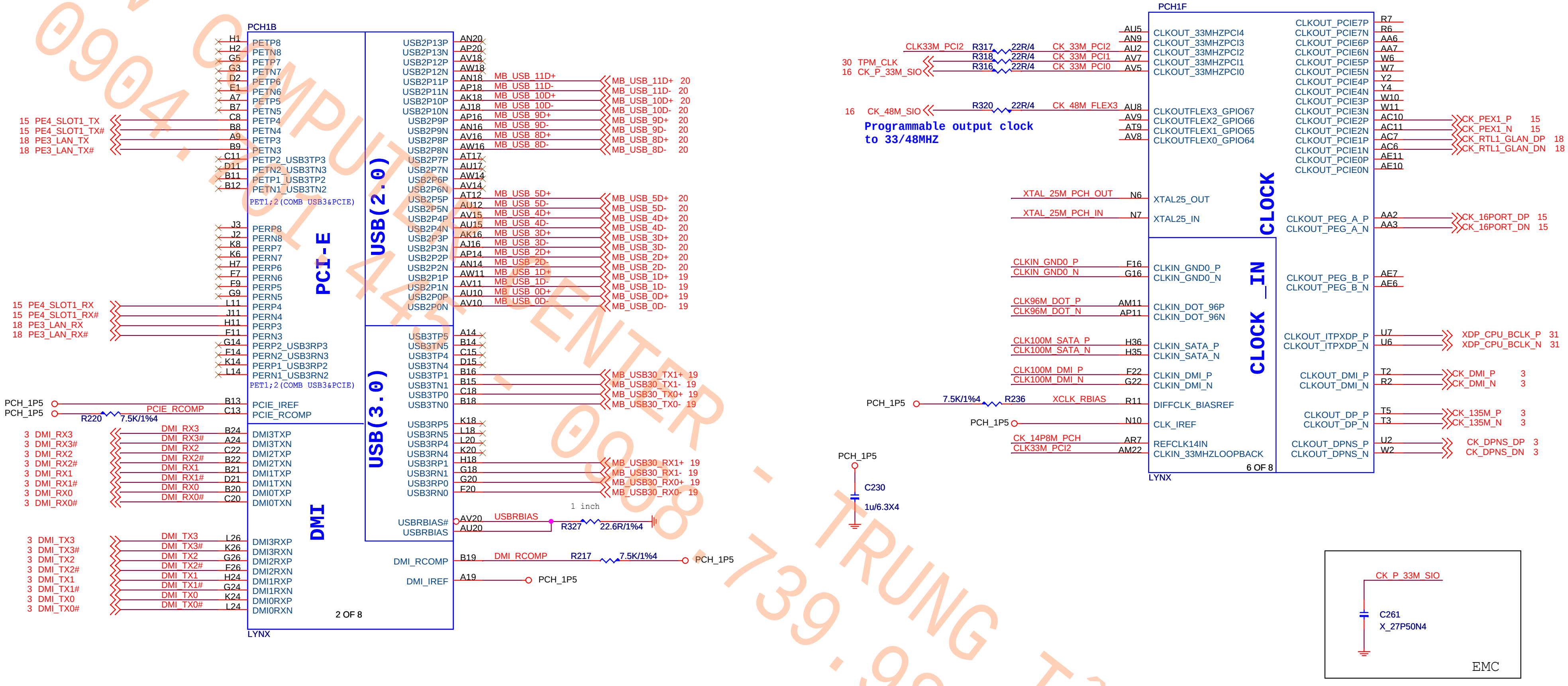
PCH1B
H1 PETP8
H2 PETN8
G5 PETP7
G3 PETN7
D2 PETP6
E1 PETN6
A7 PETP5
B7 PETN5
15 PE4_SLOT1_TX C8 PETP4
15 PE4_SLOT1_TX# B8 PETN4
18 PE3_LAN_TX A9 PETP3
18 PE3_LAN_TX# B9 PETN3
C11 PETP2_USB3TP3
D11 PETN2_USB3TN3
B11 PETP1_USB3TP2
B12 PETN1_USB3TN2
PET1;2(COMB USB3&PCIE)
J3 PERP8
J2 PERN8
K8 PERP7
K6 PERN7
H7 PERP6
F7 PERN6
F9 PERP5
G9 PERN5
15 PE4_SLOT1_RX L11 PERP4
15 PE4_SLOT1_RX# J11 PERN4
18 PE3_LAN_RX H11 PERP3
18 PE3_LAN_RX# F11 PERN3
G14 PERP2_USB3RP3
F14 PERN2_USB3RN3
K14 PERP1_USB3RP2
L14 PERN1_USB3RN2
PET1;2(COMB USB3&PCIE)
PCI-E
PCH_1P5 B13 PCIE_IREF
PCH_1P5 R220 7.5K/1%4 PCIE_RCOMP C13 PCIE_RCOMP
USB(2.0)
USB2P13P AN20
USB2P13N AP20
USB2P12P AV18
USB2P12N AW18
USB2P11P AN18 MB_USB_11D+ MB_USB_11D+ 20
USB2P11N AP18 MB_USB_11D- MB_USB_11D- 20
USB2P10P AK18 MB_USB_10D+ MB_USB_10D+ 20
USB2P10N AJ18 MB_USB_10D- MB_USB_10D- 20
USB2P9P AP16 MB_USB_9D+ MB_USB_9D+ 20
USB2P9N AN16 MB_USB_9D- MB_USB_9D- 20
USB2P8P AV16 MB_USB_8D+ MB_USB_8D+ 20
USB2P8N AW16 MB_USB_8D- MB_USB_8D- 20
USB2P7P AT17
USB2P7N AU17
USB2P6P AW14
USB2P6N AV14
USB2P5P AT12 MB_USB_5D+ MB_USB_5D+ 20
USB2P5N AU12 MB_USB_5D- MB_USB_5D- 20
USB2P4P AV15 MB_USB_4D+ MB_USB_4D+ 20
USB2P4N AU15 MB_USB_4D- MB_USB_4D- 20
USB2P3P AK16 MB_USB_3D+ MB_USB_3D+ 20
USB2P3N AJ16 MB_USB_3D- MB_USB_3D- 20
USB2P2P AP14 MB_USB_2D+ MB_USB_2D+ 20
USB2P2N AN14 MB_USB_2D- MB_USB_2D- 20
USB2P1P AW11 MB_USB_1D+ MB_USB_1D+ 19
USB2P1N AV11 MB_USB_1D- MB_USB_1D- 19
USB2P0P AU10 MB_USB_0D+ MB_USB_0D+ 19
USB2P0N AV10 MB_USB_0D- MB_USB_0D- 19
USB(3.0)
USB3TP5 A14
USB3TN5 B14
USB3TP4 C15
USB3TN4 D15
USB3TP1 B16 MB_USB30_TX1+ 19
USB3TN1 B15 MB_USB30_TX1- 19
USB3TP0 C18 MB_USB30_TX0+ 19
USB3TN0 B18 MB_USB30_TX0- 19
USB3RP5 K18
USB3RN5 L18
USB3RP4 L20
USB3RN4 K20
USB3RP1 H18 MB_USB30_RX1+ 19
USB3RN1 G18 MB_USB30_RX1- 19
USB3RP0 G20 MB_USB30_RX0+ 19
USB3RN0 F20 MB_USB30_RX0- 19
USBRBIAS# AV20 USBRBIAS
USBRBIAS AU20
1 inch
R327 22.6R/1%4
DMI
3 DMI_RX3 DMI_RX3 B24 DMI3TXP
3 DMI_RX3# DMI_RX3# A24 DMI3TXN
3 DMI_RX2 DMI_RX2 C22 DMI2TXP
3 DMI_RX2# DMI_RX2# B22 DMI2TXN
3 DMI_RX1 DMI_RX1 B21 DMI1TXP
3 DMI_RX1# DMI_RX1# D21 DMI1TXN
3 DMI_RX0 DMI_RX0 B20 DMI0TXP
3 DMI_RX0# DMI_RX0# C20 DMI0TXN
3 DMI_TX3 DMI_TX3 L26 DMI3RXP
3 DMI_TX3# DMI_TX3# K26 DMI3RXN
3 DMI_TX2 DMI_TX2 G26 DMI2RXP
3 DMI_TX2# DMI_TX2# F26 DMI2RXN
3 DMI_TX1 DMI_TX1 H24 DMI1RXP
3 DMI_TX1# DMI_TX1# G24 DMI1RXN
3 DMI_TX0 DMI_TX0 K24 DMI0RXP
3 DMI_TX0# DMI_TX0# L24 DMI0RXN
DMI_RCOMP B19 DMI_RCOMP R217 7.5K/1%4 PCH_1P5
DMI_IREF A19 PCH_1P5
2 OF 8
LYNX
PCH1F
CLK33M_PCI2 R317 22R/4 CK_33M_PCI2 AU5 CLKOUT_33MHZPCI4
30 TPM_CLK R318 22R/4 CK_33M_PCI1 AN9 CLKOUT_33MHZPCI3
16 CK_P_33M_SIO R316 22R/4 CK_33M_PCI0 AU2 CLKOUT_33MHZPCI2
AV7 CLKOUT_33MHZPCI1
AV5 CLKOUT_33MHZPCI0
16 CK_48M_SIO R320 22R/4 CK_48M_FLEX3 AU8 CLKOUTFLEX3_GPIO67
AV9 CLKOUTFLEX2_GPIO66
AT9 CLKOUTFLEX1_GPIO65
AV8 CLKOUTFLEX0_GPIO64
Programmable output clock to 33/48MHZ
XTAL_25M_PCH_OUT N6 XTAL25_OUT
XTAL_25M_PCH_IN N7 XTAL25_IN
CLOCK
CLKOUT_PCIE7P R7
CLKOUT_PCIE7N R6
CLKOUT_PCIE6P AA6
CLKOUT_PCIE6N AA7
CLKOUT_PCIE5P W6
CLKOUT_PCIE5N W7
CLKOUT_PCIE4P Y2
CLKOUT_PCIE4N Y4
CLKOUT_PCIE3P W10
CLKOUT_PCIE3N W11
CLKOUT_PCIE2P AC10 CK_PEX1_P 15
CLKOUT_PCIE2N AC11 CK_PEX1_N 15
CLKOUT_PCIE1P AC7 CK_RTL1_GLAN_DP 18
CLKOUT_PCIE1N AC6 CK_RTL1_GLAN_DN 18
CLKOUT_PCIE0P AE11
CLKOUT_PCIE0N AE10
CLKOUT_PEG_A_P AA2 CK_16PORT_DP 15
CLKOUT_PEG_A_N AA3 CK_16PORT_DN 15
CLKIN_GND0_P F16 CLKIN_GND0_P
CLKIN_GND0_N G16 CLKIN_GND0_N
CLKIN_DOT_96P AM11 CLK96M_DOT_P
CLKIN_DOT_96N AP11 CLK96M_DOT_N
CLKIN_SATA_P H36 CLK100M_SATA_P
CLKIN_SATA_N H35 CLK100M_SATA_N
CLKIN_DMI_P F22 CLK100M_DMI_P
CLKIN_DMI_N G22 CLK100M_DMI_N
PCH_1P5 7.5K/1%4 R236 XCLK_RBIAS R11 DIFFCLK_BIASREF
PCH_1P5 N10 CLK_IREF
CK_14P8M_PCH AR7 REFCLK14IN
CLK33M_PCI2 AM22 CLKIN_33MHZLOOPBACK
CLOCK_IN
CLKOUT_PEG_B_P AE7
CLKOUT_PEG_B_N AE6
CLKOUT_ITPXDP_P U7 XDP_CPU_BCLK_P 31
CLKOUT_ITPXDP_N U6 XDP_CPU_BCLK_N 31
CLKOUT_DMI_P T2 CK_DMI_P 3
CLKOUT_DMI_N R2 CK_DMI_N 3
CLKOUT_DP_P T5 CK_135M_P 3
CLKOUT_DP_N T3 CK_135M_N 3
CLKOUT_DPNS_P U2 CK_DPNS_DP 3
CLKOUT_DPNS_N W2 CK_DPNS_DN 3
6 OF 8
LYNX
PCH_1P5
C230
1u/6.3X4
CK_P_33M_SIO
C261
X_27P50N4
EMC

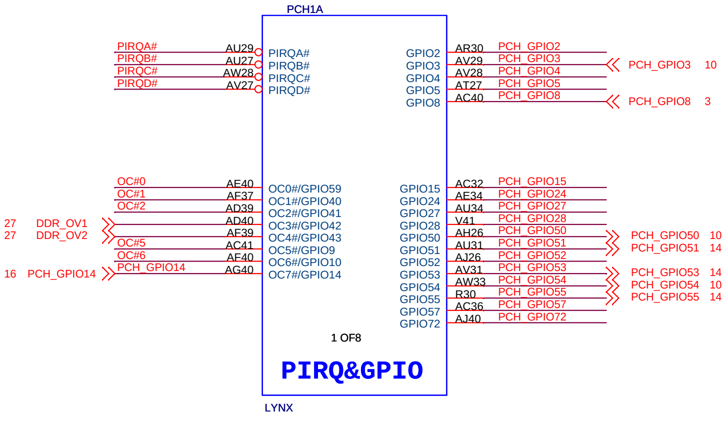
PCH1A
PIRQA# AU29 PIRQA#
PIRQB# AU27 PIRQB#
PIRQC# AW28 PIRQC#
PIRQD# AV27 PIRQD#
GPIO2 AR30 PCH_GPIO2
GPIO3 AV29 PCH_GPIO3 PCH_GPIO3 10
GPIO4 AV28 PCH_GPIO4
GPIO5 AT27 PCH_GPIO5
GPIO8 AC40 PCH_GPIO8 PCH_GPIO8 3
OC#0 AE40 OC0#/GPIO59
OC#1 AF37 OC1#/GPIO40
OC#2 AD39 OC2#/GPIO41
27 DDR_OV1 AD40 OC3#/GPIO42
27 DDR_OV2 AF39 OC4#/GPIO43
OC#5 AC41 OC5#/GPIO9
OC#6 AF40 OC6#/GPIO10
16 PCH_GPIO14 PCH_GPIO14 AG40 OC7#/GPIO14
GPIO15 AC32 PCH_GPIO15
GPIO24 AE34 PCH_GPIO24
GPIO27 AU34 PCH_GPIO27
GPIO28 V41 PCH_GPIO28
GPIO50 AH26 PCH_GPIO50 PCH_GPIO50 10
GPIO51 AU31 PCH_GPIO51 PCH_GPIO51 14
GPIO52 AJ26 PCH_GPIO52
GPIO53 AV31 PCH_GPIO53 PCH_GPIO53 14
GPIO54 AW33 PCH_GPIO54 PCH_GPIO54 10
GPIO55 R30 PCH_GPIO55 PCH_GPIO55 14
GPIO57 AC36 PCH_GPIO57
GPIO72 AJ40 PCH_GPIO72
1 OF8
PIRQ&GPIO
LYNX

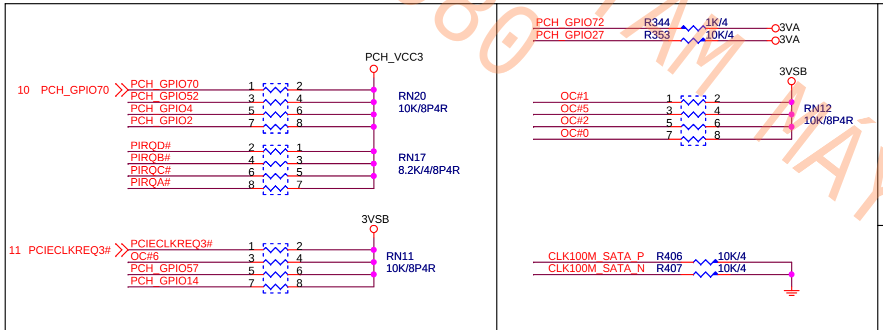
PCH_VCC3
10 PCH_GPIO70 PCH_GPIO70 1 2
PCH_GPIO52 3 4
PCH_GPIO4 5 6
PCH_GPIO2 7 8
RN20 10K/8P4R
PIRQD# 2 1
PIRQB# 4 3
PIRQC# 6 5
PIRQA# 8 7
RN17 8.2K/4/8P4R
3VSB
11 PCIECLKREQ3# PCIECLKREQ3# 1 2
OC#6 3 4
PCH_GPIO57 5 6
PCH_GPIO14 7 8
RN11 10K/8P4R
PCH_GPIO72 R344 1K/4 3VA
PCH_GPIO27 R353 10K/4 3VA
3VSB
OC#1 1 2
OC#5 3 4
OC#2 5 6
OC#0 7 8
RN12 10K/8P4R
CLK100M_SATA_P R406 10K/4
CLK100M_SATA_N R407 10K/4

OPT BOM:FOR BIOS USE

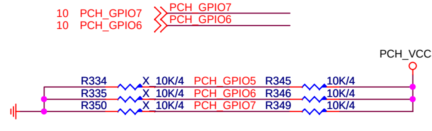
10 PCH_GPIO7 PCH_GPIO7
10 PCH_GPIO6 PCH_GPIO6
PCH_VCC3
R334 X_10K/4 PCH_GPIO5 R345 10K/4
R335 X_10K/4 PCH_GPIO6 R346 10K/4
R350 X_10K/4 PCH_GPIO7 R349 10K/4

CRYSTAL:25MHZ

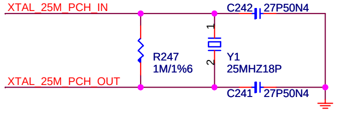
XTAL_25M_PCH_IN
C242 27P50N4
R247 1M/1%6
Y1 25MHZ18P
1 2
XTAL_25M_PCH_OUT
C241 27P50N4

default:OUTPUT

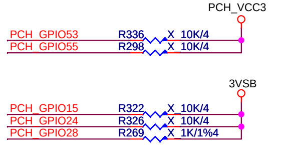
PCH_VCC3
PCH_GPIO53 R336 X_10K/4
PCH_GPIO55 R298 X_10K/4
3VSB
PCH_GPIO15 R322 X_10K/4
PCH_GPIO24 R326 X_10K/4
PCH_GPIO28 R269 X_1K/1%4

no clock gen pull down

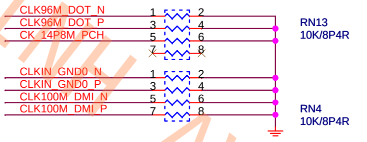
CLK96M_DOT_N 1 2
CLK96M_DOT_P 3 4
CK_14P8M_PCH 5 6
7 8
RN13 10K/8P4R
CLKIN_GND0_N 1 2
CLKIN_GND0_P 3 4
CLK100M_DMI_N 5 6
CLK100M_DMI_P 7 8
RN4 10K/8P4R

MSI
MICRO-STAR INT'L CO.,LTD
MS-7817

Size	Document Description	Rev
Custom	PPT PCIE/DMI/USB/CLK	10

Date: Tuesday, December 04, 2012 Sheet 9 of 36

SATA ports 2 and 3 are disabled on 4 port SKUs.
SATA 6 Gb/s support on ports 0 and 1 only.

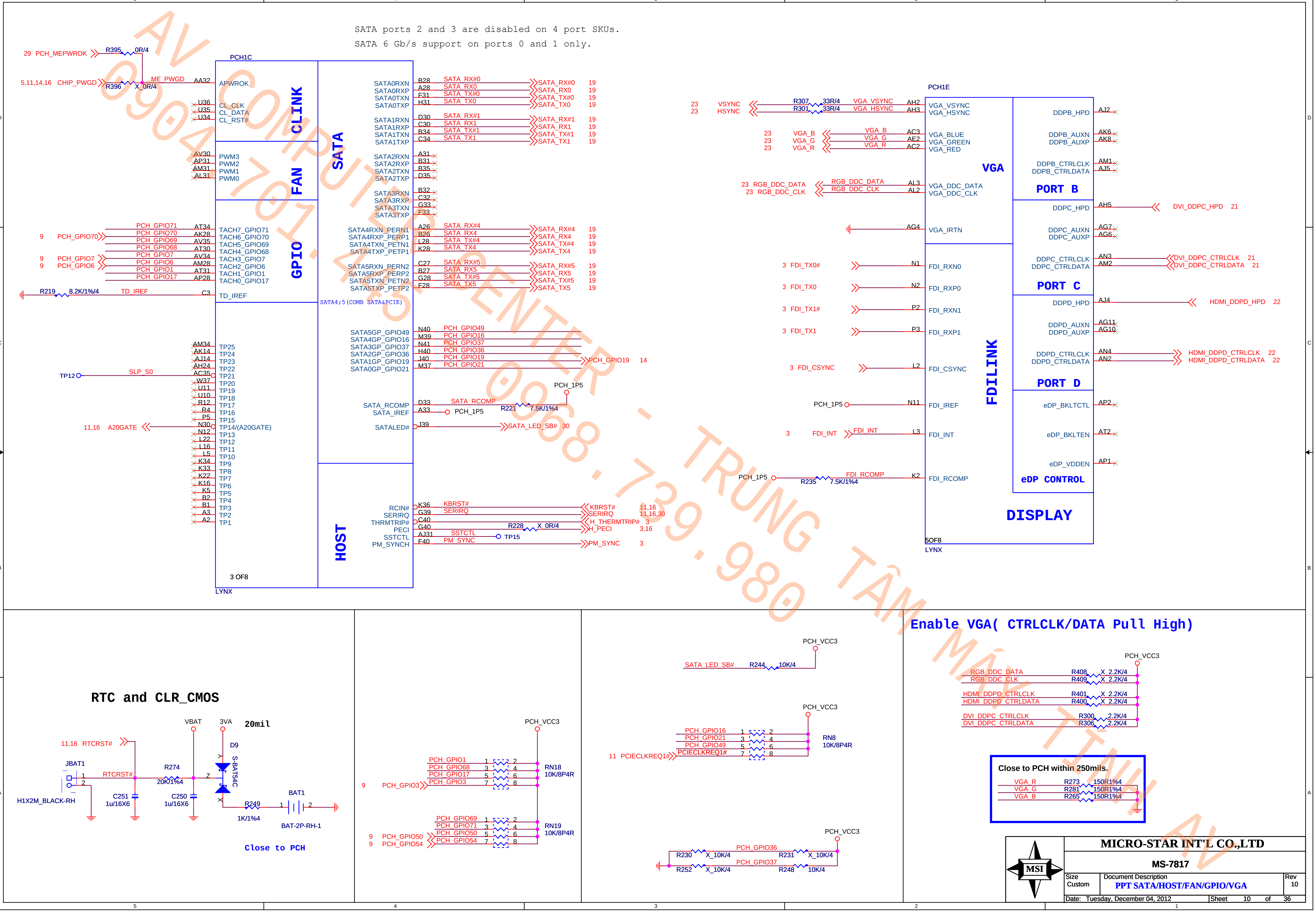

PCH1C
29 PCH_MEPWROK
R395 0R/4
5,11,14,16 CHIP_PWGD
R396 X_0R/4
ME_PWGD
AA32 APWROK
U36 CL_CLK
U35 CL_DATA
U34 CL_RST#
CLINK
AV30 PWM3
AP31 PWM2
AM31 PWM1
AL31 PWM0
FAN
SATA
PCH_GPIO71 AT34 TACH7_GPIO71
9 PCH_GPIO70 AK28 TACH6_GPIO70
PCH_GPIO69 AV35 TACH5_GPIO69
PCH_GPIO68 AT30 TACH4_GPIO68
9 PCH_GPIO7 AV34 TACH3_GPIO7
9 PCH_GPIO6 AM28 TACH2_GPIO6
PCH_GPIO1 AT31 TACH1_GPIO1
PCH_GPIO17 AP28 TACH0_GPIO17
GPIO
R219 8.2K/1%/4 TD_IREF C3 TD_IREF
TP25 TP24 TP23 TP22 TP21 TP20 TP19 TP18 TP17 TP16 TP15
TP12 SLP_S0 AC35
11,16 A20GATE N30 TP14/(A20GATE)
TP13 TP12 TP11 TP10 TP9 TP8 TP7 TP6 TP5 TP4 TP3 TP2 TP1
3 OF8
LYNX
SATA0RXN B28 SATA_RX#0 19
SATA0RXP A28 SATA_RX0 19
SATA0TXN F31 SATA_TX#0 19
SATA0TXP H31 SATA_TX0 19
SATA1RXN D30 SATA_RX#1 19
SATA1RXP C30 SATA_RX1 19
SATA1TXN B34 SATA_TX#1 19
SATA1TXP C34 SATA_TX1 19
SATA2RXN A31 SATA2RXP B31 SATA2TXN B35 SATA2TXP D35
SATA3RXN B32 SATA3RXP C32 SATA3TXN G33 SATA3TXP F33
SATA4RXN_PERN1 A26 SATA_RX#4 19
SATA4RXP_PERP1 B26 SATA_RX4 19
SATA4TXN_PETN1 L28 SATA_TX#4 19
SATA4TXP_PETP1 K28 SATA_TX4 19
SATA5RXN_PERN2 C27 SATA_RX#5 19
SATA5RXP_PERP2 B27 SATA_RX5 19
SATA5TXN_PETN2 G28 SATA_TX#5 19
SATA5TXP_PETP2 F28 SATA_TX5 19
SATA4;5(COMB SATA&PCIE)
SATA5GP_GPIO49 N40 PCH_GPIO49
SATA4GP_GPIO16 M39 PCH_GPIO16
SATA3GP_GPIO37 N41 PCH_GPIO37
SATA2GP_GPIO36 H40 PCH_GPIO36
SATA1GP_GPIO19 J40 PCH_GPIO19 14
SATA0GP_GPIO21 M37 PCH_GPIO21
PCH_1P5
SATA_RCOMP D33 SATA_RCOMP R221 7.5K/1%/4
SATA_IREF A33 PCH_1P5
SATALED# J39 SATA_LED_SB# 30
HOST
RCIN# K36 KBRST# 11,16
SERIRQ G39 SERIRQ 11,16,30
THRMTRIP# C40 R228 X_0R/4 H_THERMTRIP# 3
PECI G40 H_PECI 3,16
SSTCTL AJ31 SSTCTL TP15
PM_SYNCH F40 PM_SYNC 3
PCH1E
23 VSYNC R307 33R/4 VGA_VSYNC AH2 VGA_VSYNC
23 HSYNC R301 33R/4 VGA_HSYNC AH3 VGA_HSYNC
23 VGA_B AC3 VGA_BLUE
23 VGA_G AE2 VGA_GREEN
23 VGA_R AC2 VGA_RED
VGA
23 RGB_DDC_DATA AL3 VGA_DDC_DATA
23 RGB_DDC_CLK AL2 VGA_DDC_CLK
AG4 VGA_IRTN
DDPB_HPD AJ2
DDPB_AUXN AK6
DDPB_AUXP AK8
DDPB_CTRLCLK AM1
DDPB_CTRLDATA AJ5
PORT B
DDPC_HPD AH5 DVI_DDPC_HPD 21
DDPC_AUXN AG7
DDPC_AUXP AG6
DDPC_CTRLCLK AN3 DVI_DDPC_CTRLCLK 21
DDPC_CTRLDATA AM2 DVI_DDPC_CTRLDATA 21
PORT C
DDPD_HPD AJ4 HDMI_DDPD_HPD 22
DDPD_AUXN AG11
DDPD_AUXP AG10
DDPD_CTRLCLK AN4 HDMI_DDPD_CTRLCLK 22
DDPD_CTRLDATA AN2 HDMI_DDPD_CTRLDATA 22
PORT D
3 FDI_TX0# N1 FDI_RXN0
3 FDI_TX0 N2 FDI_RXP0
3 FDI_TX1# P2 FDI_RXN1
3 FDI_TX1 P3 FDI_RXP1
3 FDI_CSYNC L2 FDI_CSYNC
PCH_1P5 N11 FDI_IREF
3 FDI_INT L3 FDI_INT
PCH_1P5 R235 7.5K/1%/4 FDI_RCOMP K2 FDI_RCOMP
FDILINK
eDP_BKLTCTL AP2
eDP_BKLTEN AT2
eDP_VDDEN AP1
eDP CONTROL
DISPLAY
5OF8
LYNX
RTC and CLR_CMOS
VBAT 3VA 20mil
11,16 RTCRST#
JBAT1
RTCRST#
R274 20K/1%4
H1X2M_BLACK-RH
C251 1u/16X6
C250 1u/16X6
D9 S-BAT54C
R249 1K/1%4
BAT1 BAT-2P-RH-1
Close to PCH
PCH_VCC3
PCH_GPIO1 PCH_GPIO68 PCH_GPIO17 PCH_GPIO3
9 PCH_GPIO3
RN18 10K/8P4R
PCH_GPIO69 PCH_GPIO71 PCH_GPIO50 PCH_GPIO54
9 PCH_GPIO50
9 PCH_GPIO54
RN19 10K/8P4R
PCH_VCC3
SATA_LED_SB# R244 10K/4
PCH_VCC3
PCH_GPIO16 PCH_GPIO21 PCH_GPIO49 PCIECLKREQ1#
11 PCIECLKREQ1#
RN8 10K/8P4R
PCH_VCC3
R230 X_10K/4 PCH_GPIO36 R231 X_10K/4
R252 X_10K/4 PCH_GPIO37 R248 10K/4
Enable VGA(CTRLCLK/DATA Pull High)
PCH_VCC3
RGB_DDC_DATA R408 X_2.2K/4
RGB_DDC_CLK R409 X_2.2K/4
HDMI_DDPD_CTRLCLK R401 X_2.2K/4
HDMI_DDPD_CTRLDATA R400 X_2.2K/4
DVI_DDPC_CTRLCLK R300 2.2K/4
DVI_DDPC_CTRLDATA R306 2.2K/4
Close to PCH within 250mils.
VGA_R R273 150R1%4
VGA_G R281 150R1%4
VGA_B R265 150R1%4

MICRO-STAR INT'L CO.,LTD

MS-7817

Size	Document Description	Rev
Custom	PPT SATA/HOST/FAN/GPIO/VGA	10

Date: Tuesday, December 04, 2012 Sheet 10 of 36

AV COMPUTER CENTER 0904.701.415
AV TRUNG TÂM MÁY TÍNH AV 0968.739.980

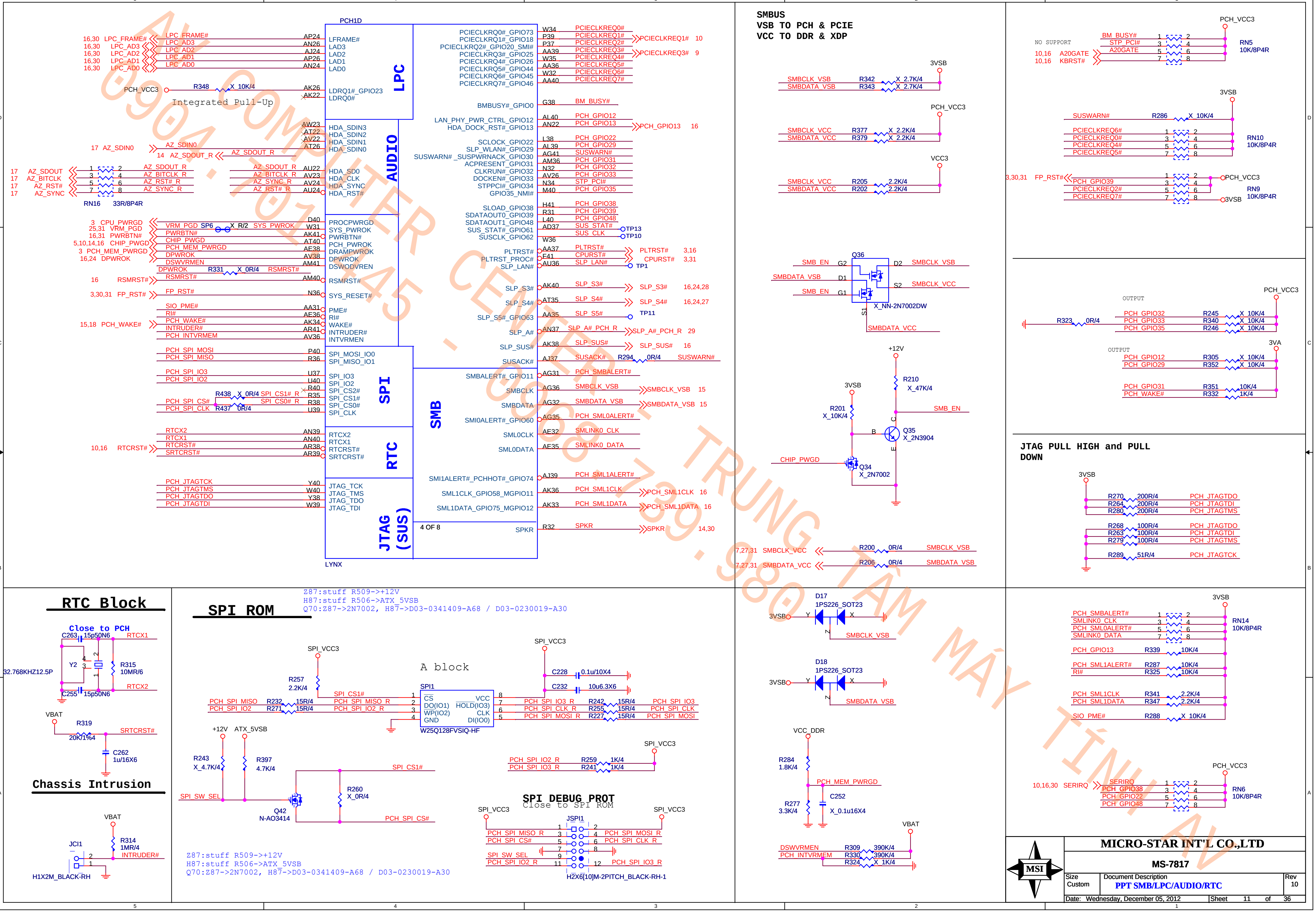
PCH1D
LFRAME#
LAD3
LAD2
LAD1
LAD0
LPC
LDRQ1#_GPIO23
LDRQ0#
16,30 LPC_FRAME#
16,30 LPC_AD3
16,30 LPC_AD2
16,30 LPC_AD1
16,30 LPC_AD0
PCH_VCC3
R348 X_10K/4
Integrated Pull-Up
HDA_SDIN3
HDA_SDIN2
HDA_SDIN1
HDA_SDIN0
AUDIO
HDA_SDO
HDA_CLK
HDA_SYNC
HDA_RST#
17 AZ_SDIN0
14 AZ_SDOUT_R
17 AZ_SDOUT
17 AZ_BITCLK
17 AZ_RST#
17 AZ_SYNC
RN16 33R/8P4R
PROCPWRGD
SYS_PWROK
PWRBTN#
PCH_PWROK
DRAMPWROK
DPWROK
DSWODVREN
3 CPU_PWRGD
25,31 VRM_PGD
16,31 PWRBTN#
5,10,14,16 CHIP_PWGD
3 PCH_MEM_PWRGD
16,24 DPWROK
VRM_PGD SP6 X_R/2 SYS_PWROK
DSWVRMEN
R331 X_0R/4 RSMRST#
RSMRST#
16 RSMRST#
SYS_RESET#
3,30,31 FP_RST#
PME#
RI#
WAKE#
INTRUDER#
INTVRMEN
SIO_PME#
15,18 PCH_WAKE#
PCH_INTVRMEM
SPI_MOSI_IO0
SPI_MISO_IO1
SPI_IO3
SPI_IO2
SPI_CS2#
SPI_CS1#
SPI_CS0#
SPI_CLK
SPI
PCH_SPI_MOSI
PCH_SPI_MISO
PCH_SPI_IO3
PCH_SPI_IO2
R438 X_0R/4 SPI_CS1#_R
SPI_CS0#_R
PCH_SPI_CS#
PCH_SPI_CLK R437 0R/4
RTCX2
RTCX1
RTCRST#
SRTCRST#
RTC
10,16 RTCRST#
JTAG_TCK
JTAG_TMS
JTAG_TDO
JTAG_TDI
JTAG (SUS)
PCH_JTAGTCK
PCH_JTAGTMS
PCH_JTAGTDO
PCH_JTAGTDI
LYNX
4 OF 8
PCIECLKRQ0#_GPIO73
PCIECLKRQ1#_GPIO18
PCIECLKRQ2#_GPIO20_SMI#
PCIECLKRQ3#_GPIO25
PCIECLKRQ4#_GPIO26
PCIECLKRQ5#_GPIO44
PCIECLKRQ6#_GPIO45
PCIECLKRQ7#_GPIO46
PCIECLKREQ1# 10
PCIECLKREQ3# 9
BMBUSY#_GPIO0
BM_BUSY#
LAN_PHY_PWR_CTRL_GPIO12
HDA_DOCK_RST#_GPIO13
PCH_GPIO13 16
SCLOCK_GPIO22
SLP_WLAN#_GPIO29
SUSWARN#_SUSPWRNACK_GPIO30
ACPRESENT_GPIO31
CLKRUN#_GPIO32
DOCKEN#_GPIO33
STPPCI#_GPIO34
GPIO35_NMI#
STP_PCI#
SLOAD_GPIO38
SDATAOUT0_GPIO39
SDATAOUT1_GPIO48
SUS_STAT#_GPIO61
SUSCLK_GPIO62
SUS_STAT# TP13
SUS_CLK TP10
PLTRST#
PLTRST_PROC#
SLP_LAN#
PLTRST# 3,16
CPURST# 3,31
TP1
SLP_S3#
SLP_S4#
SLP_S5#_GPIO63
SLP_A#
SLP_SUS#
SUSACK#
SLP_S3# 16,24,28
SLP_S4# 16,24,27
TP11
SLP_A#_PCH_R 29
SLP_SUS# 16
R294 0R/4 SUSWARN#
SMBALERT#_GPIO11
SMBCLK
SMBDATA
SMI0ALERT#_GPIO60
SML0CLK
SML0DATA
SMB
PCH_SMBALERT#
SMBCLK_VSB 15
SMBDATA_VSB 15
PCH_SML0ALERT#
SMLINK0_CLK
SMLINK0_DATA
SMI1ALERT#_PCHHOT#_GPIO74
SML1CLK_GPIO58_MGPIO11
SML1DATA_GPIO75_MGPIO12
PCH_SML1ALERT#
PCH_SML1CLK 16
PCH_SML1DATA 16
SPKR
SPKR 14,30
SMBUS
VSB TO PCH & PCIE
VCC TO DDR & XDP
3VSB
SMBCLK_VSB R342 X_2.7K/4
SMBDATA_VSB R343 X_2.7K/4
PCH_VCC3
SMBCLK_VCC R377 X_2.2K/4
SMBDATA_VCC R379 X_2.2K/4
VCC3
SMBCLK_VCC R205 2.2K/4
SMBDATA_VCC R202 2.2K/4
Q36
SMB_EN G2 D2 SMBCLK_VSB
SMBDATA_VSB D1
SMB_EN G1 S2 SMBCLK_VCC
S1 X_NN-2N7002DW
SMBDATA_VCC
+12V
R210 X_47K/4
3VSB
R201 X_10K/4
SMB_EN
Q35 X_2N3904
CHIP_PWGD
Q34 X_2N7002
7,27,31 SMBCLK_VCC R200 0R/4 SMBCLK_VSB
7,27,31 SMBDATA_VCC R206 0R/4 SMBDATA_VSB
PCH_VCC3
NO SUPPORT
BM_BUSY#
STP_PCI#
10,16 A20GATE
10,16 KBRST#
RN5 10K/8P4R
3VSB
SUSWARN# R286 X_10K/4
PCIECLKREQ6#
PCIECLKREQ0#
PCIECLKREQ4#
PCIECLKREQ5#
RN10 10K/8P4R
3,30,31 FP_RST#
PCH_GPIO39
PCIECLKREQ2#
PCIECLKREQ7#
PCH_VCC3
RN9 10K/8P4R
3VSB
OUTPUT
PCH_VCC3
R323 0R/4
PCH_GPIO32 R245 X_10K/4
PCH_GPIO33 R340 X_10K/4
PCH_GPIO35 R246 X_10K/4
OUTPUT
3VA
PCH_GPIO12 R305 X_10K/4
PCH_GPIO29 R352 X_10K/4
PCH_GPIO31 R351 10K/4
PCH_WAKE# R332 1K/4
JTAG PULL HIGH and PULL DOWN
3VSB
R270 200R/4 PCH_JTAGTDO
R264 200R/4 PCH_JTAGTDI
R280 200R/4 PCH_JTAGTMS
R268 100R/4 PCH_JTAGTDO
R263 100R/4 PCH_JTAGTDI
R279 100R/4 PCH_JTAGTMS
R289 51R/4 PCH_JTAGTCK
RTC Block
Close to PCH
C263 15p50N6 RTCX1
Y2
32.768KHZ12.5P
R315 10MR/6
C255 15p50N6 RTCX2
VBAT
R319 20K/1%4 SRTCRST#
C262 1u/16X6
Chassis Intrusion
VBAT
JCI1
R314 1MR/4
INTRUDER#
H1X2M_BLACK-RH
SPI ROM
Z87:stuff R509->+12V
H87:stuff R506->ATX_5VSB
Q70:Z87->2N7002, H87->D03-0341409-A68 / D03-0230019-A30
SPI_VCC3
R257 2.2K/4
A block
SPI_VCC3
C228 0.1u/10X4
C232 10u6.3X6
SPI1
CS
DO(IO1)
WP(IO2)
GND
VCC
HOLD(IO3)
CLK
DI(IO0)
W25Q128FVSIQ-HF
SPI_CS1#
PCH_SPI_MISO R232 15R/4 SPI_MISO_R
PCH_SPI_IO2 R271 15R/4 SPI_IO2_R
PCH_SPI_IO3_R R242 15R/4 PCH_SPI_IO3
PCH_SPI_CLK_R R255 15R/4 PCH_SPI_CLK
PCH_SPI_MOSI_R R227 15R/4 PCH_SPI_MOSI
+12V ATX_5VSB
R243 X_4.7K/4
R397 4.7K/4
SPI_SW_SEL
Q42 N-AO3414
R260 X_0R/4
SPI_CS1#
PCH_SPI_CS#
SPI_VCC3
PCH_SPI_IO2_R R259 1K/4
PCH_SPI_IO3_R R241 1K/4
SPI DEBUG PROT
Close to SPI ROM
SPI_VCC3
JSPI1
PCH_SPI_MISO_R
PCH_SPI_CS#
SPI_SW_SEL
PCH_SPI_IO2_R
PCH_SPI_MOSI_R
PCH_SPI_CLK_R
PCH_SPI_IO3_R
H2X6[10]M-2PITCH_BLACK-RH-1
Z87:stuff R509->+12V
H87:stuff R506->ATX_5VSB
Q70:Z87->2N7002, H87->D03-0341409-A68 / D03-0230019-A30
D17 1PS226_SOT23
3VSB
SMBCLK_VSB
D18 1PS226_SOT23
3VSB
SMBDATA_VSB
VCC_DDR
R284 1.8K/4
PCH_MEM_PWRGD
R277 3.3K/4
C252 X_0.1u16X4
VBAT
DSWVREN R309 390K/4
PCH_INTVRMEM R330 390K/4
R324 X_1K/4
3VSB
PCH_SMBALERT#
SMLINK0_CLK
PCH_SML0ALERT#
SMLINK0_DATA
RN14 10K/8P4R
PCH_GPIO13 R339 10K/4
PCH_SML1ALERT# R287 10K/4
RI# R325 10K/4
PCH_SML1CLK R341 2.2K/4
PCH_SML1DATA R347 2.2K/4
SIO_PME# R288 X_10K/4
PCH_VCC3
10,16,30 SERIRQ
PCH_GPIO38
PCH_GPIO22
PCH_GPIO48
RN6 10K/8P4R
MSI

MICRO-STAR INT'L CO.,LTD

MS-7817

Size	Document Description	Rev
Custom	PPT SMB/LPC/AUDIO/RTC	10

Date: Wednesday, December 05, 2012 Sheet 11 of 36

VCC3	0.21A
3VA	0.015A
VBAT	6uA
3VSB	0.261A
VCC1_5	0.249A
PCH_1P05	5.747A

Change to 10UH if
VCCA_DPLLA/VCCA_DPLLB
has noise issue.

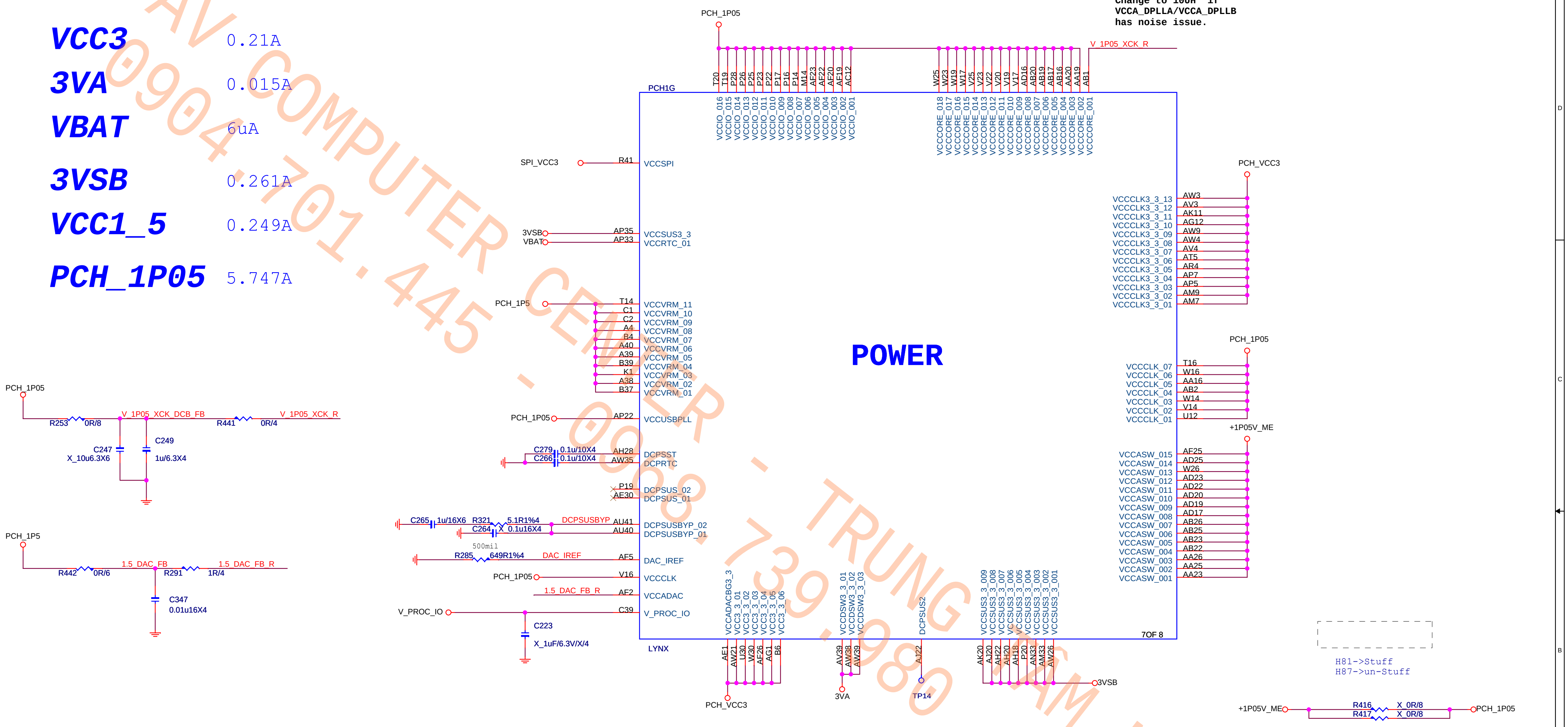

PCH_1P05
V_1P05_XCK_R
PCH1G
POWER
T20 T19 P28 P26 P25 P23 P22 P17 P16 P14 M14 AF23 AF22 AF20 AF19 AC12
VCCIO_016 … VCCIO_001
W25 W23 W19 W17 V25 V23 V22 V20 V19 V17 AD16 AB20 AB19 AB17 AB16 AA20 AA19 AB1
VCCCORE_018 … VCCCORE_001
SPI_VCC3 R41 VCCSPI
3VSB AP35 VCCSUS3_3
VBAT AP33 VCCRTC_01
PCH_1P5 T14 C1 C2 A4 B4 A40 A39 B39 K1 A38 B37
VCCVRM_11 … VCCVRM_01
PCH_1P05 AP22 VCCUSBPLL
C279 0.1u/10X4 AH28 DCPSST
C266 0.1u/10X4 AW35 DCPRTC
P19 DCPSUS_02
AE30 DCPSUS_01
C265 1u/16X6 R321 5.1R1%4 DCPSUSBYP AU41 DCPSUSBYP_02
C264 X_0.1u16X4 AU40 DCPSUSBYP_01
500mil
R285 649R1%4 DAC_IREF AF5 DAC_IREF
PCH_1P05 V16 VCCCLK
1.5_DAC_FB_R AF2 VCCADAC
V_PROC_IO C39 V_PROC_IO
C223 X_1uF/6.3V/X/4
LYNX
7OF 8
PCH_VCC3
AW3 AV3 AK11 AG12 AW9 AW4 AV4 AT5 AR4 AP7 AP5 AM9 AM7
VCCCLK3_3_13 … VCCCLK3_3_01
PCH_1P05
T16 W16 AA16 AB2 W14 V14 U12
VCCCLK_07 … VCCCLK_01
+1P05V_ME
AF25 AD25 W26 AD23 AD22 AD20 AD19 AD17 AB26 AB25 AB23 AB22 AA26 AA25 AA23
VCCASW_015 … VCCASW_001
VCCADACBG3_3 VCC3_3_01 VCC3_3_02 VCC3_3_03 VCC3_3_04 VCC3_3_05 VCC3_3_06
AE1 AW21 U30 W30 AF26 AG1 B6
PCH_VCC3
VCCDSW3_3_01 VCCDSW3_3_02 VCCDSW3_3_03
AV39 AW38 AW39
3VA
DCPSUS2 AJ22 TP14
VCCSUS3_3_009 … VCCSUS3_3_001
AK20 AJ20 AH22 AH20 AH18 P20 AN33 AM33 AW26
3VSB
PCH_1P05
R253 0R/8 V_1P05_XCK_DCB_FB R441 0R/4 V_1P05_XCK_R
C247 X_10u6.3X6
C249 1u/6.3X4
PCH_1P5
R442 0R/6 1.5_DAC_FB R291 1R/4 1.5_DAC_FB_R
C347 0.01u16X4
H81->Stuff
H87->un-Stuff
+1P05V_ME R416 X_0R/8 R417 X_0R/8 PCH_1P05

PCH_VCC3 HAVE SEQENCING

PCH decoupling cap

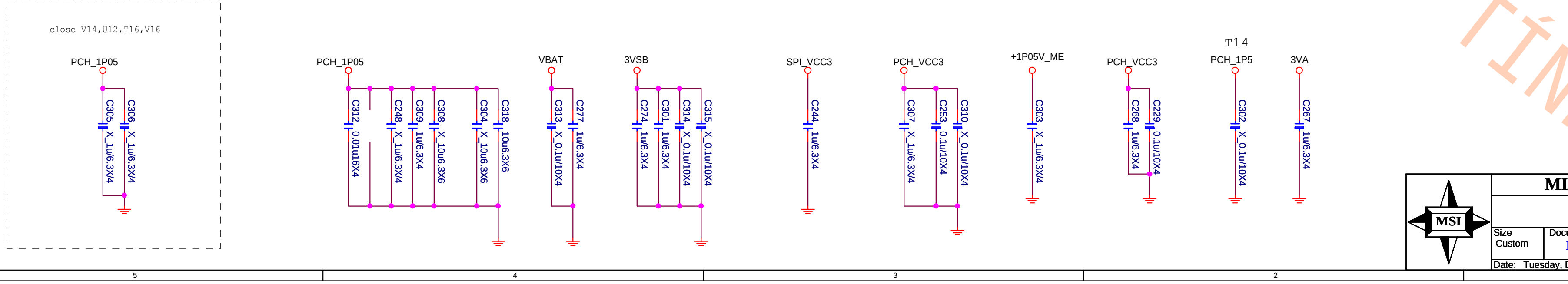

close V14,U12,T16,V16
PCH_1P05 C305 X_1u/6.3X4 C306 X_1u/6.3X4
PCH_1P05 C312 0.01u16X4 C248 X_1u/6.3X4 C309 1u/6.3X4 C308 X_10u6.3X6 C304 X_10u6.3X6 C318 10u6.3X6
VBAT C313 X_0.1u/10X4 C277 1u/6.3X4
3VSB C274 1u/6.3X4 C301 1u/6.3X4 C314 X_0.1u/10X4 C315 X_0.1u/10X4
SPI_VCC3 C244 1u/6.3X4
PCH_VCC3 C307 X_1u/6.3X4 C253 0.1u/10X4 C310 X_0.1u/10X4
+1P05V_ME C303 X_1u/6.3X4
PCH_VCC3 C268 1u/6.3X4 C229 0.1u/10X4
T14
PCH_1P5 C302 X_0.1u/10X4
3VA C267 1u/6.3X4

MICRO-STAR INT'L CO.,LTD

MS-7817

Size	Document Description	Rev
Custom	LYNX -POWER PIN	10

Date: Tuesday, December 04, 2012 | Sheet 12 of 36

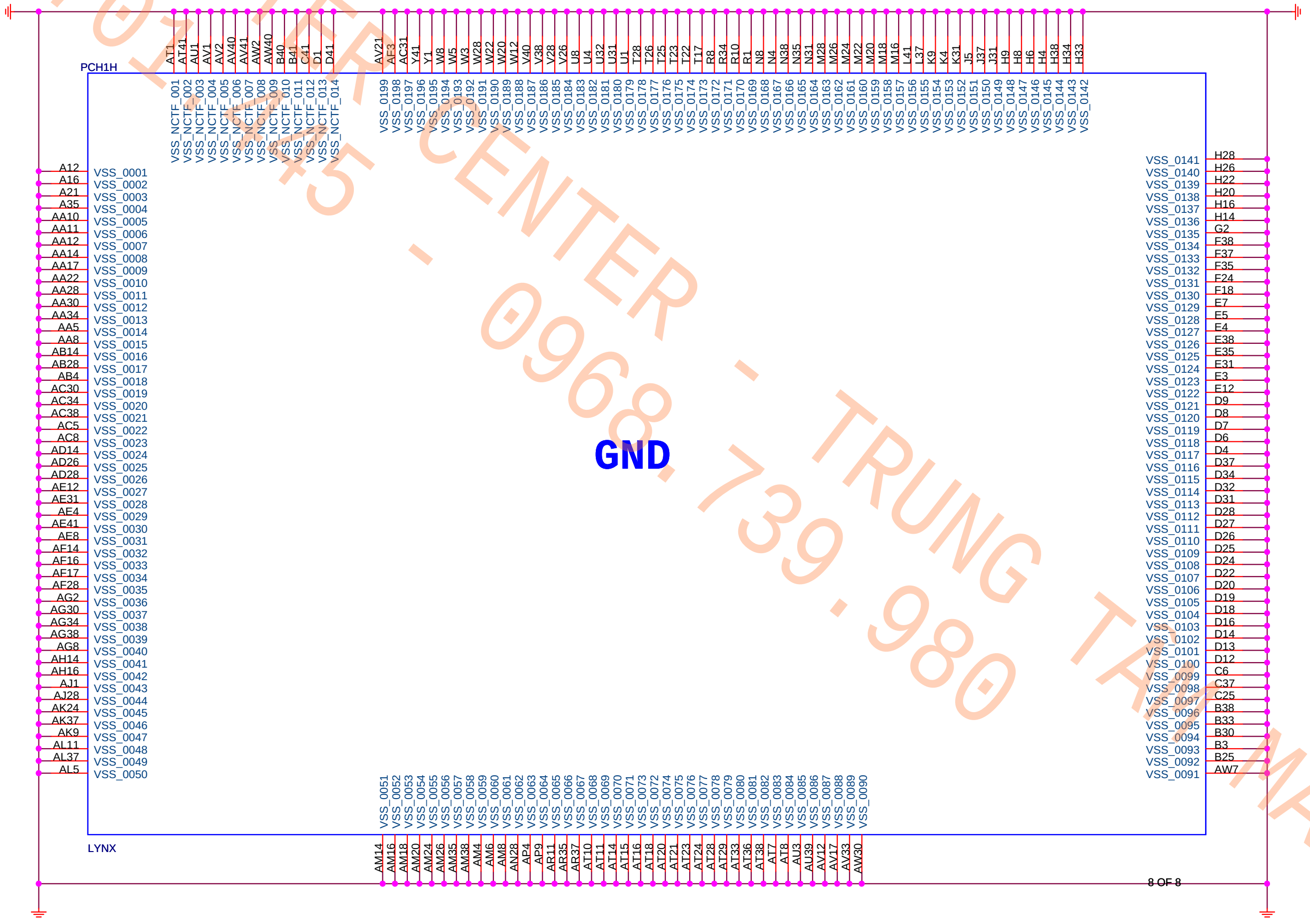
PCH1H
GND
LYNX
8 OF 8
AT1 VSS_NCTF_001
AT41 VSS_NCTF_002
AU1 VSS_NCTF_003
AV1 VSS_NCTF_004
AV2 VSS_NCTF_005
AV40 VSS_NCTF_006
AV41 VSS_NCTF_007
AW2 VSS_NCTF_008
AW40 VSS_NCTF_009
B40 VSS_NCTF_010
B41 VSS_NCTF_011
C41 VSS_NCTF_012
D1 VSS_NCTF_013
D41 VSS_NCTF_014
AV21 VSS_0199
AF3 VSS_0198
AC31 VSS_0197
Y41 VSS_0196
Y1 VSS_0195
W8 VSS_0194
W5 VSS_0193
W3 VSS_0192
W28 VSS_0191
W22 VSS_0190
W20 VSS_0189
W12 VSS_0188
V40 VSS_0187
V38 VSS_0186
V28 VSS_0185
V26 VSS_0184
U8 VSS_0183
U4 VSS_0182
U32 VSS_0181
U31 VSS_0180
U1 VSS_0179
T28 VSS_0178
T26 VSS_0177
T25 VSS_0176
T23 VSS_0175
T22 VSS_0174
T17 VSS_0173
R8 VSS_0172
R34 VSS_0171
R10 VSS_0170
R1 VSS_0169
N8 VSS_0168
N4 VSS_0167
N38 VSS_0166
N35 VSS_0165
N31 VSS_0164
M28 VSS_0163
M26 VSS_0162
M24 VSS_0161
M22 VSS_0160
M20 VSS_0159
M18 VSS_0158
M16 VSS_0157
L41 VSS_0156
L37 VSS_0155
K9 VSS_0154
K4 VSS_0153
K31 VSS_0152
J5 VSS_0151
J37 VSS_0150
J31 VSS_0149
H9 VSS_0148
H8 VSS_0147
H6 VSS_0146
H4 VSS_0145
H38 VSS_0144
H34 VSS_0143
H33 VSS_0142
A12 VSS_0001
A16 VSS_0002
A21 VSS_0003
A35 VSS_0004
AA10 VSS_0005
AA11 VSS_0006
AA12 VSS_0007
AA14 VSS_0008
AA17 VSS_0009
AA22 VSS_0010
AA28 VSS_0011
AA30 VSS_0012
AA34 VSS_0013
AA5 VSS_0014
AA8 VSS_0015
AB14 VSS_0016
AB28 VSS_0017
AB4 VSS_0018
AC30 VSS_0019
AC34 VSS_0020
AC38 VSS_0021
AC5 VSS_0022
AC8 VSS_0023
AD14 VSS_0024
AD26 VSS_0025
AD28 VSS_0026
AE12 VSS_0027
AE31 VSS_0028
AE4 VSS_0029
AE41 VSS_0030
AE8 VSS_0031
AF14 VSS_0032
AF16 VSS_0033
AF17 VSS_0034
AF28 VSS_0035
AG2 VSS_0036
AG30 VSS_0037
AG34 VSS_0038
AG38 VSS_0039
AG8 VSS_0040
AH14 VSS_0041
AH16 VSS_0042
AJ1 VSS_0043
AJ28 VSS_0044
AK24 VSS_0045
AK37 VSS_0046
AK9 VSS_0047
AL11 VSS_0048
AL37 VSS_0049
AL5 VSS_0050
VSS_0141 H28
VSS_0140 H26
VSS_0139 H22
VSS_0138 H20
VSS_0137 H16
VSS_0136 H14
VSS_0135 G2
VSS_0134 F38
VSS_0133 F37
VSS_0132 F35
VSS_0131 F24
VSS_0130 F18
VSS_0129 E7
VSS_0128 E5
VSS_0127 E4
VSS_0126 E38
VSS_0125 E35
VSS_0124 E31
VSS_0123 E3
VSS_0122 E12
VSS_0121 D9
VSS_0120 D8
VSS_0119 D7
VSS_0118 D6
VSS_0117 D4
VSS_0116 D37
VSS_0115 D34
VSS_0114 D32
VSS_0113 D31
VSS_0112 D28
VSS_0111 D27
VSS_0110 D26
VSS_0109 D25
VSS_0108 D24
VSS_0107 D22
VSS_0106 D20
VSS_0105 D19
VSS_0104 D18
VSS_0103 D16
VSS_0102 D14
VSS_0101 D13
VSS_0100 D12
VSS_0099 C6
VSS_0098 C37
VSS_0097 C25
VSS_0096 B38
VSS_0095 B33
VSS_0094 B30
VSS_0093 B3
VSS_0092 B25
VSS_0091 AW7
AM14 VSS_0051
AM16 VSS_0052
AM18 VSS_0053
AM20 VSS_0054
AM24 VSS_0055
AM26 VSS_0056
AM35 VSS_0057
AM38 VSS_0058
AM4 VSS_0059
AM6 VSS_0060
AM8 VSS_0061
AN28 VSS_0062
AP4 VSS_0063
AP9 VSS_0064
AR11 VSS_0065
AR35 VSS_0066
AR37 VSS_0067
AT10 VSS_0068
AT11 VSS_0069
AT14 VSS_0070
AT15 VSS_0071
AT16 VSS_0072
AT18 VSS_0073
AT20 VSS_0074
AT21 VSS_0075
AT23 VSS_0076
AT24 VSS_0077
AT28 VSS_0078
AT29 VSS_0079
AT33 VSS_0080
AT36 VSS_0081
AT38 VSS_0082
AT7 VSS_0083
AT8 VSS_0084
AU3 VSS_0085
AU39 VSS_0086
AV12 VSS_0087
AV17 VSS_0088
AV33 VSS_0089
AW30 VSS_0090

AV COMPUTER CENTER - TRUNG TÂM MÁY TÍNH AV
0904.701.345 - 0968.739.980

MICRO-STAR INT'L CO.,LTD

MS-7817

Size	Document Description	Rev
Custom	PPT GND/NVRAM	10

Date: Tuesday, December 04, 2012 Sheet 13 of 36

PCH Straps

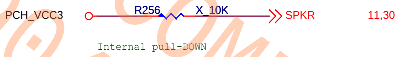
PCH_VCC3
R256
X_10K
SPKR
11,30
Internal pull-DOWN

SPKR

Default Mode:

Internal weak Pull-down.

No Reboot Mode with TCO Disabled:

Connect to Vcc3_3 with 8.2k-10k Ohm weak pullup resistor.

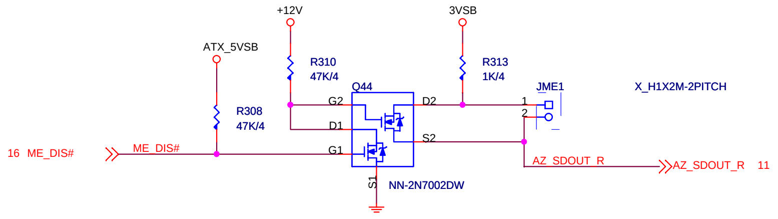
+12V
3VSB
ATX_5VSB
R310
47K/4
R313
1K/4
Q44
JME1
X_H1X2M-2PITCH
R308
47K/4
G2
D2
D1
S2
G1
S1
1
2
16 ME_DIS#
ME_DIS#
AZ_SDOUT_R
AZ_SDOUT_R 11
NN-2N7002DW

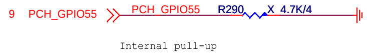
9 PCH_GPIO55
PCH_GPIO55
R290
X_4.7K/4
Internal pull-up

HDA_SDO

Default:

Do not pull high.

Disable ME in Manufacturing Mode:

Connect to VccSusHDA with 1k Ohm pull-up resistor through a jumper.

GPIO55

Default Mode:

Internal pull-up.

Top Block Swap Mode:

Connect to ground with 4.7k Ohm weak pulldown resistor.

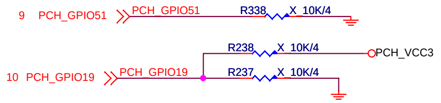
9 PCH_GPIO51
PCH_GPIO51
R338
X_10K/4
R238
X_10K/4
PCH_VCC3
10 PCH_GPIO19
PCH_GPIO19
R237
X_10K/4

SATA1GP/GPIO19, GPIO51

Default (SPI):

Left both SATA1GP/GPIO19 and GPIO51 floating.

No pull up required.

Boot from PCI:

Connect SATA1GP/GPIO19 to ground with 1k Ohm pull-down resistor.

Leave GPIO51 Floating.

Boot from LPC:

Connect both SATA1GP/GPIO19 and GPIO51 to ground with 1k Ohm pull-down resistor.

GPIO37

Enable TLS:

Pull up with 1k Ohm to VccSus3.3.

Default (Disable TLS):

Leave NC. Internal pull down.

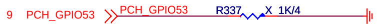
9 PCH_GPIO53
PCH_GPIO53
R337
X_1K/4

GPIO53

Do not pull low.

Connect to ground with 1k Ohm pull-down resistor.

For test cpu voltage

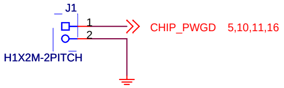
J1
1
2
CHIP_PWGD
5,10,11,16
H1X2M-2PITCH

MSI

MICRO-STAR INT'L CO.,LTD

MS-7817

Size	Document Description	Rev
Custom	PPT STRAPS	10

Date: Tuesday, December 04, 2012 Sheet 14 of 36

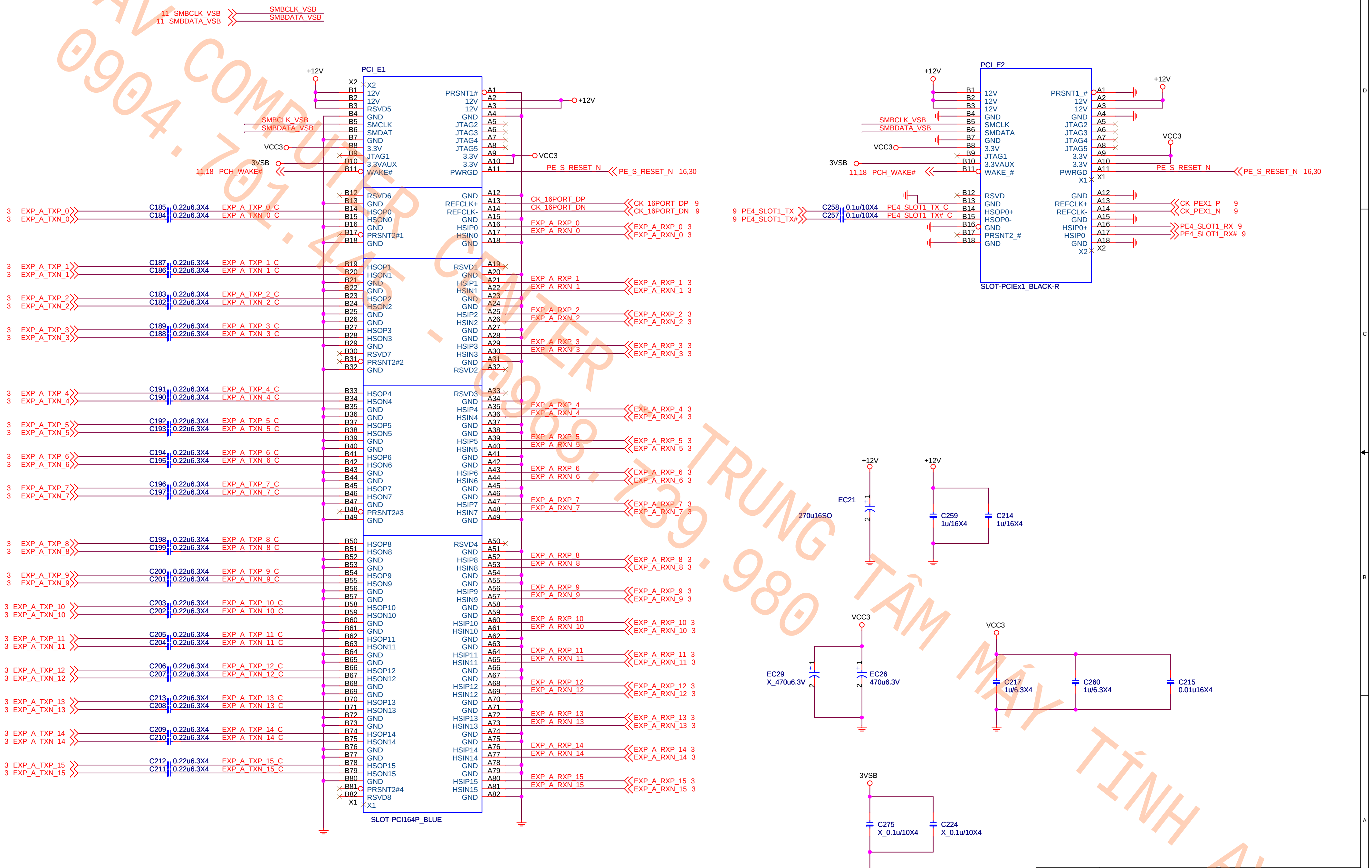

11 SMBCLK_VSB
11 SMBDATA_VSB
SMBCLK_VSB
SMBDATA_VSB
PCI_E1
+12V
X2
B1 12V
B2 12V
B3 RSVD5
B4 GND
B5 SMCLK
B6 SMDAT
B7 GND
B8 3.3V
B9 JTAG1
B10 3.3VAUX
B11 WAKE#
VCC3
3VSB
11,18 PCH_WAKE#
PRSNT1# A1
12V A2
12V A3
GND A4
JTAG2 A5
JTAG3 A6
JTAG4 A7
JTAG5 A8
3.3V A9
3.3V A10
PWRGD A11
+12V
VCC3
PE_S_RESET_N
PE_S_RESET_N 16,30
B12 RSVD6
B13 GND
B14 HSOP0
B15 HSON0
B16 GND
B17 PRSNT2#1
B18 GND
GND A12
REFCLK+ A13
REFCLK- A14
GND A15
HSIP0 A16
HSIN0 A17
GND A18
CK_16PORT_DP
CK_16PORT_DN
CK_16PORT_DP 9
CK_16PORT_DN 9
3 EXP_A_TXP_0
3 EXP_A_TXN_0
C185 0.22u6.3X4 EXP_A_TXP_0_C
C184 0.22u6.3X4 EXP_A_TXN_0_C
EXP_A_RXP_0
EXP_A_RXN_0
EXP_A_RXP_0 3
EXP_A_RXN_0 3
B19 HSOP1
B20 HSON1
B21 GND
B22 GND
B23 HSOP2
B24 HSON2
B25 GND
B26 GND
B27 HSOP3
B28 HSON3
B29 GND
B30 RSVD7
B31 PRSNT2#2
B32 GND
RSVD1 A19
GND A20
HSIP1 A21
HSIN1 A22
GND A23
GND A24
HSIP2 A25
HSIN2 A26
GND A27
GND A28
HSIP3 A29
HSIN3 A30
GND A31
RSVD2 A32
3 EXP_A_TXP_1
3 EXP_A_TXN_1
C187 0.22u6.3X4 EXP_A_TXP_1_C
C186 0.22u6.3X4 EXP_A_TXN_1_C
3 EXP_A_TXP_2
3 EXP_A_TXN_2
C183 0.22u6.3X4 EXP_A_TXP_2_C
C182 0.22u6.3X4 EXP_A_TXN_2_C
3 EXP_A_TXP_3
3 EXP_A_TXN_3
C189 0.22u6.3X4 EXP_A_TXP_3_C
C188 0.22u6.3X4 EXP_A_TXN_3_C
EXP_A_RXP_1
EXP_A_RXN_1
EXP_A_RXP_1 3
EXP_A_RXN_1 3
EXP_A_RXP_2
EXP_A_RXN_2
EXP_A_RXP_2 3
EXP_A_RXN_2 3
EXP_A_RXP_3
EXP_A_RXN_3
EXP_A_RXP_3 3
EXP_A_RXN_3 3
B33 HSOP4
B34 HSON4
B35 GND
B36 GND
B37 HSOP5
B38 HSON5
B39 GND
B40 GND
B41 HSOP6
B42 HSON6
B43 GND
B44 GND
B45 HSOP7
B46 HSON7
B47 GND
B48 PRSNT2#3
B49 GND
RSVD3 A33
GND A34
HSIP4 A35
HSIN4 A36
GND A37
GND A38
HSIP5 A39
HSIN5 A40
GND A41
GND A42
HSIP6 A43
HSIN6 A44
GND A45
GND A46
HSIP7 A47
HSIN7 A48
GND A49
3 EXP_A_TXP_4
3 EXP_A_TXN_4
C191 0.22u6.3X4 EXP_A_TXP_4_C
C190 0.22u6.3X4 EXP_A_TXN_4_C
3 EXP_A_TXP_5
3 EXP_A_TXN_5
C192 0.22u6.3X4 EXP_A_TXP_5_C
C193 0.22u6.3X4 EXP_A_TXN_5_C
3 EXP_A_TXP_6
3 EXP_A_TXN_6
C194 0.22u6.3X4 EXP_A_TXP_6_C
C195 0.22u6.3X4 EXP_A_TXN_6_C
3 EXP_A_TXP_7
3 EXP_A_TXN_7
C196 0.22u6.3X4 EXP_A_TXP_7_C
C197 0.22u6.3X4 EXP_A_TXN_7_C
EXP_A_RXP_4
EXP_A_RXN_4
EXP_A_RXP_4 3
EXP_A_RXN_4 3
EXP_A_RXP_5
EXP_A_RXN_5
EXP_A_RXP_5 3
EXP_A_RXN_5 3
EXP_A_RXP_6
EXP_A_RXN_6
EXP_A_RXP_6 3
EXP_A_RXN_6 3
EXP_A_RXP_7
EXP_A_RXN_7
EXP_A_RXP_7 3
EXP_A_RXN_7 3
B50 HSOP8
B51 HSON8
B52 GND
B53 GND
B54 HSOP9
B55 HSON9
B56 GND
B57 GND
B58 HSOP10
B59 HSON10
B60 GND
B61 GND
B62 HSOP11
B63 HSON11
B64 GND
B65 GND
B66 HSOP12
B67 HSON12
B68 GND
B69 GND
B70 HSOP13
B71 HSON13
B72 GND
B73 GND
B74 HSOP14
B75 HSON14
B76 GND
B77 GND
B78 HSOP15
B79 HSON15
B80 GND
B81 PRSNT2#4
B82 RSVD8
X1 X1
RSVD4 A50
GND A51
HSIP8 A52
HSIN8 A53
GND A54
GND A55
HSIP9 A56
HSIN9 A57
GND A58
GND A59
HSIP10 A60
HSIN10 A61
GND A62
GND A63
HSIP11 A64
HSIN11 A65
GND A66
GND A67
HSIP12 A68
HSIN12 A69
GND A70
GND A71
HSIP13 A72
HSIN13 A73
GND A74
GND A75
HSIP14 A76
HSIN14 A77
GND A78
GND A79
HSIP15 A80
HSIN15 A81
GND A82
SLOT-PCI164P_BLUE
3 EXP_A_TXP_8
3 EXP_A_TXN_8
C198 0.22u6.3X4 EXP_A_TXP_8_C
C199 0.22u6.3X4 EXP_A_TXN_8_C
3 EXP_A_TXP_9
3 EXP_A_TXN_9
C200 0.22u6.3X4 EXP_A_TXP_9_C
C201 0.22u6.3X4 EXP_A_TXN_9_C
3 EXP_A_TXP_10
3 EXP_A_TXN_10
C203 0.22u6.3X4 EXP_A_TXP_10_C
C202 0.22u6.3X4 EXP_A_TXN_10_C
3 EXP_A_TXP_11
3 EXP_A_TXN_11
C205 0.22u6.3X4 EXP_A_TXP_11_C
C204 0.22u6.3X4 EXP_A_TXN_11_C
3 EXP_A_TXP_12
3 EXP_A_TXN_12
C206 0.22u6.3X4 EXP_A_TXP_12_C
C207 0.22u6.3X4 EXP_A_TXN_12_C
3 EXP_A_TXP_13
3 EXP_A_TXN_13
C213 0.22u6.3X4 EXP_A_TXP_13_C
C208 0.22u6.3X4 EXP_A_TXN_13_C
3 EXP_A_TXP_14
3 EXP_A_TXN_14
C209 0.22u6.3X4 EXP_A_TXP_14_C
C210 0.22u6.3X4 EXP_A_TXN_14_C
3 EXP_A_TXP_15
3 EXP_A_TXN_15
C212 0.22u6.3X4 EXP_A_TXP_15_C
C211 0.22u6.3X4 EXP_A_TXN_15_C
EXP_A_RXP_8
EXP_A_RXN_8
EXP_A_RXP_8 3
EXP_A_RXN_8 3
EXP_A_RXP_9
EXP_A_RXN_9
EXP_A_RXP_9 3
EXP_A_RXN_9 3
EXP_A_RXP_10
EXP_A_RXN_10
EXP_A_RXP_10 3
EXP_A_RXN_10 3
EXP_A_RXP_11
EXP_A_RXN_11
EXP_A_RXP_11 3
EXP_A_RXN_11 3
EXP_A_RXP_12
EXP_A_RXN_12
EXP_A_RXP_12 3
EXP_A_RXN_12 3
EXP_A_RXP_13
EXP_A_RXN_13
EXP_A_RXP_13 3
EXP_A_RXN_13 3
EXP_A_RXP_14
EXP_A_RXN_14
EXP_A_RXP_14 3
EXP_A_RXN_14 3
EXP_A_RXP_15
EXP_A_RXN_15
EXP_A_RXP_15 3
EXP_A_RXN_15 3
PCI_E2
+12V
B1 12V
B2 12V
B3 12V
B4 GND
B5 SMCLK
B6 SMDATA
B7 GND
B8 3.3V
B9 JTAG1
B10 3.3VAUX
B11 WAKE_#
SMBCLK_VSB
SMBDATA_VSB
VCC3
3VSB
11,18 PCH_WAKE#
PRSNT1_# A1
12V A2
12V A3
GND A4
JTAG2 A5
JTAG3 A6
JTAG4 A7
JTAG5 A8
3.3V A9
3.3V A10
PWRGD A11
X1 X1
+12V
VCC3
PE_S_RESET_N
PE_S_RESET_N 16,30
B12 RSVD
B13 GND
B14 HSOP0+
B15 HSOP0-
B16 GND
B17 PRSNT2_#
B18 GND
GND A12
REFCLK+ A13
REFCLK- A14
GND A15
HSIP0+ A16
HSIP0- A17
GND A18
X2 X2
9 PE4_SLOT1_TX
9 PE4_SLOT1_TX#
C258 0.1u/10X4 PE4_SLOT1_TX_C
C257 0.1u/10X4 PE4_SLOT1_TX#_C
CK_PEX1_P 9
CK_PEX1_N 9
PE4_SLOT1_RX 9
PE4_SLOT1_RX# 9
SLOT-PCIEx1_BLACK-R
+12V
EC21
270u16SO
+12V
C259 1u/16X4
C214 1u/16X4
VCC3
EC29 X_470u6.3V
EC26 470u6.3V
VCC3
C217 1u/6.3X4
C260 1u/6.3X4
C215 0.01u16X4
3VSB
C275 X_0.1u/10X4
C224 X_0.1u/10X4

AV COMPUTER 0904.701.445 - 0968.739.980 TRUNG TÂM MÁY TÍNH AV

MSI

MICRO-STAR INT'L CO.,LTD

MS-7817

Size	Document Description	Rev
Custom	**PCIE1(X1) & PCIE2(X16) Slots**	10

Date: Tuesday, December 04, 2012 | Sheet 15 of 36

AV COMPUTER 0904.701.445
CENTER 0968.739.980
TRUNG TÂM MÁY TÍNH AV

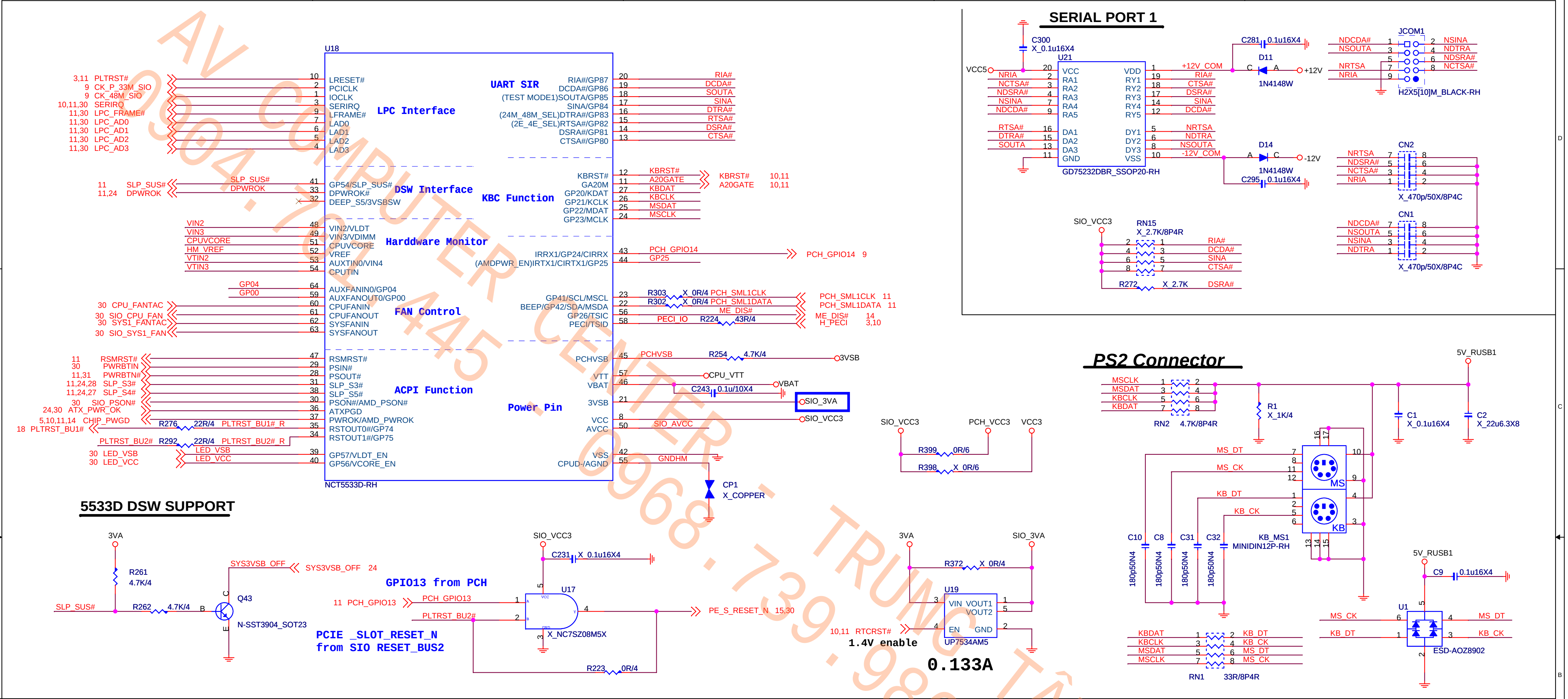
U18
NCT5533D-RH
LPC Interface
UART SIR
DSW Interface
KBC Function
Harddware Monitor
FAN Control
ACPI Function
Power Pin
LRESET#
PCICLK
IOCLK
SERIRQ
LFRAME#
LAD0
LAD1
LAD2
LAD3
RIA#/GP87
DCDA#/GP86
(TEST MODE1)SOUTA/GP85
SINA/GP84
(24M_48M_SEL)DTRA#/GP83
(2E_4E_SEL)RTSA#/GP82
DSRA#/GP81
CTSA#/GP80
GP54/SLP_SUS#
DPWROK#
DEEP_S5/3VSBSW
KBRST#
GA20M
GP20/KDAT
GP21/KCLK
GP22/MDAT
GP23/MCLK
VIN2/VLDT
VIN3/VDIMM
CPUVCORE
VREF
AUXTIN0/VIN4
CPUTIN
IRRX1/GP24/CIRRX
(AMDPWR_EN)IRTX1/CIRTX1/GP25
AUXFANIN0/GP04
AUXFANOUT0/GP00
CPUFANIN
CPUFANOUT
SYSFANIN
SYSFANOUT
GP41/SCL/MSCL
BEEP/GP42/SDA/MSDA
GP26/TSIC
PECI/TSID
RSMRST#
PSIN#
PSOUT#
SLP_S3#
SLP_S5#
PSON#/AMD_PSON#
ATXPGD
PWROK/AMD_PWROK
RSTOUT0#/GP74
RSTOUT1#/GP75
GP57/VLDT_EN
GP56/VCORE_EN
PCHVSB
VTT
VBAT
3VSB
VCC
AVCC
VSS
CPUD-/AGND
3,11 PLTRST#
9 CK_P_33M_SIO
9 CK_48M_SIO
10,11,30 SERIRQ
11,30 LPC_FRAME#
11,30 LPC_AD0
11,30 LPC_AD1
11,30 LPC_AD2
11,30 LPC_AD3
11 SLP_SUS#
11,24 DPWROK
30 CPU_FANTAC
30 SIO_CPU_FAN
30 SYS1_FANTAC
30 SIO_SYS1_FAN
11 RSMRST#
30 PWRBTIN
11,31 PWRBTN#
11,24,28 SLP_S3#
11,24,27 SLP_S4#
30 SIO_PSON#
24,30 ATX_PWR_OK
5,10,11,14 CHIP_PWGD
18 PLTRST_BU1#
30 LED_VSB
30 LED_VCC
KBRST# 10,11
A20GATE 10,11
PCH_GPIO14 9
PCH_SML1CLK 11
PCH_SML1DATA 11
ME_DIS# 14
H_PECI 3,10
R303 X_0R/4
R302 X_0R/4
R224 43R/4
R254 4.7K/4
C243 0.1u/10X4
R276 22R/4
R292 22R/4
SIO_3VA
SIO_VCC3
SIO_AVCC
GNDHM
CP1
X_COPPER
5533D DSW SUPPORT
3VA
R261
4.7K/4
SLP_SUS#
R262 4.7K/4
Q43
N-SST3904_SOT23
SYS3VSB_OFF
SYS3VSB_OFF 24
GPIO13 from PCH
11 PCH_GPIO13
PLTRST_BU2#
U17
X_NC7SZ08M5X
C231 X_0.1u16X4
PE_S_RESET_N 15,30
PCIE _SLOT_RESET_N
from SIO RESET_BUS2
R223 0R/4
SIO_VCC3
PCH_VCC3
VCC3
R399 0R/6
R398 X_0R/6
R372 X_0R/4
U19
UP7534AM5
VIN VOUT1
VOUT2
EN GND
10,11 RTCRST#
1.4V enable
0.133A
SERIAL PORT 1
C300
X_0.1u16X4
U21
GD75232DBR_SSOP20-RH
VCC5
+12V_COM
-12V_COM
C281 0.1u16X4
D11
1N4148W
+12V
D14
1N4148W
-12V
C295 0.1u16X4
JCOM1
H2X5[10]M_BLACK-RH
CN2
X_470p/50X/8P4C
CN1
X_470p/50X/8P4C
RN15
X_2.7K/8P4R
R272 X_2.7K
PS2 Connector
5V_RUSB1
RN2 4.7K/8P4R
R1
X_1K/4
C1
X_0.1u16X4
C2
X_22u6.3X8
KB_MS1
MINIDIN12P-RH
MS
KB
C10 C8 C31 C32
180p50N4
RN1 33R/8P4R
C9 0.1u16X4
U1
ESD-AOZ8902

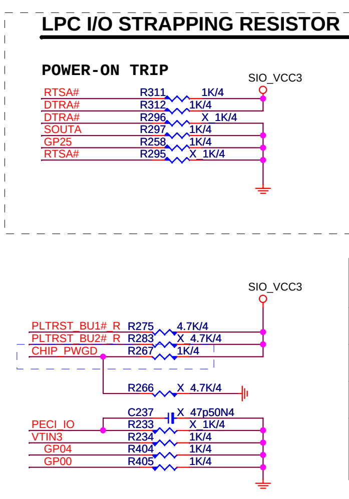
LPC I/O STRAPPING RESISTOR
POWER-ON TRIP
SIO_VCC3
RTSA# R311 1K/4
DTRA# R312 1K/4
DTRA# R296 X_1K/4
SOUTA R297 1K/4
GP25 R258 1K/4
RTSA# R295 X_1K/4
PLTRST_BU1#_R R275 4.7K/4
PLTRST_BU2#_R R283 X_4.7K/4
CHIP_PWGD R267 1K/4
R266 X_4.7K/4
C237 X_47p50N4
PECI_IO R233 X_1K/4
VTIN3 R234 1K/4
GP04 R404 1K/4
GP00 R405 1K/4

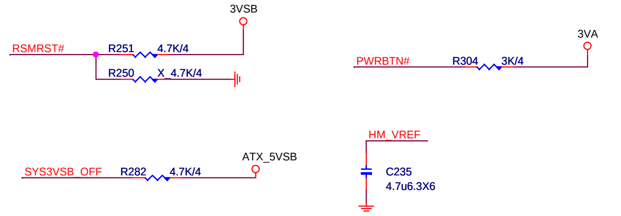
3VSB
RSMRST# R251 4.7K/4
R250 X_4.7K/4
3VA
PWRBTN# R304 3K/4
HM_VREF
C235
4.7u6.3X6
ATX_5VSB
SYS3VSB_OFF R282 4.7K/4

NCT5533D POWER ON STRAPPING PIN

PIN	Function	NET Name	HI	LO
44	AMDPWR_EN		ENABLE AMD PWR SEQ	DISABLE AMD PWR SEQ
18	TEST_MODE1	SOUTA	TEST MODE 1 ENABLE	TEST MODE 1 DISABLE
16	24M_48M_SEL	DTRA#	48MHz	24MHz
15	2E_4E_SEL	RTSA#	4E	2E

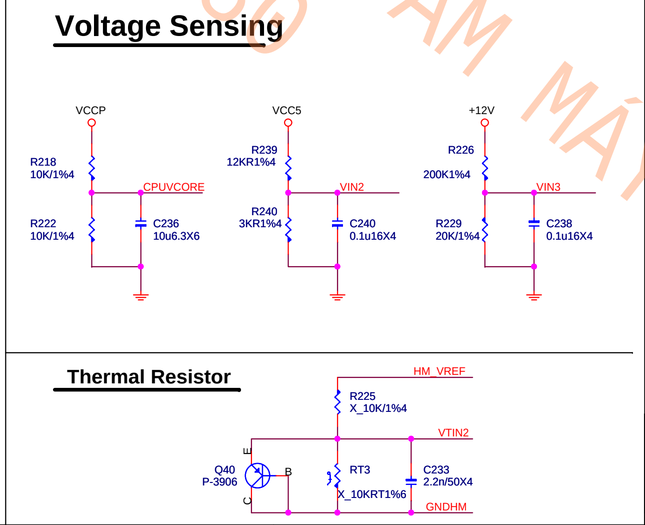
Voltage Sensing
VCCP
R218 10K/1%4
CPUVCORE
R222 10K/1%4
C236 10u6.3X6
VCC5
R239 12KR1%4
VIN2
R240 3KR1%4
C240 0.1u16X4
+12V
R226 200K1%4
VIN3
R229 20K/1%4
C238 0.1u16X4
Thermal Resistor
HM_VREF
R225 X_10K/1%4
VTIN2
Q40 P-3906
RT3 X_10KRT1%6
C233 2.2n/50X4
GNDHM

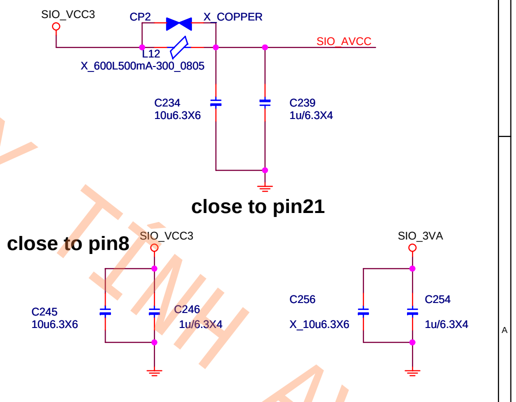
SIO_VCC3
CP2 X_COPPER
L12
X_600L500mA-300_0805
SIO_AVCC
C234 10u6.3X6
C239 1u/6.3X4
close to pin21
close to pin8
SIO_VCC3
C245 10u6.3X6
C246 1u/6.3X4
SIO_3VA
C256 X_10u6.3X6
C254 1u/6.3X4

MICRO-STAR INT'L CO.,LTD

MS-7817

Size	Document Description	Rev
Custom	SIO-NUVOTON NCT5533D	10

Date: Tuesday, December 04, 2012 Sheet 16 of 36

AV COMPUTER 0904.701.445 - 0968.739.980 TRUNG TÂM MÁY TÍNH AV

Type C:

ALC887-VD

VT1708S CE

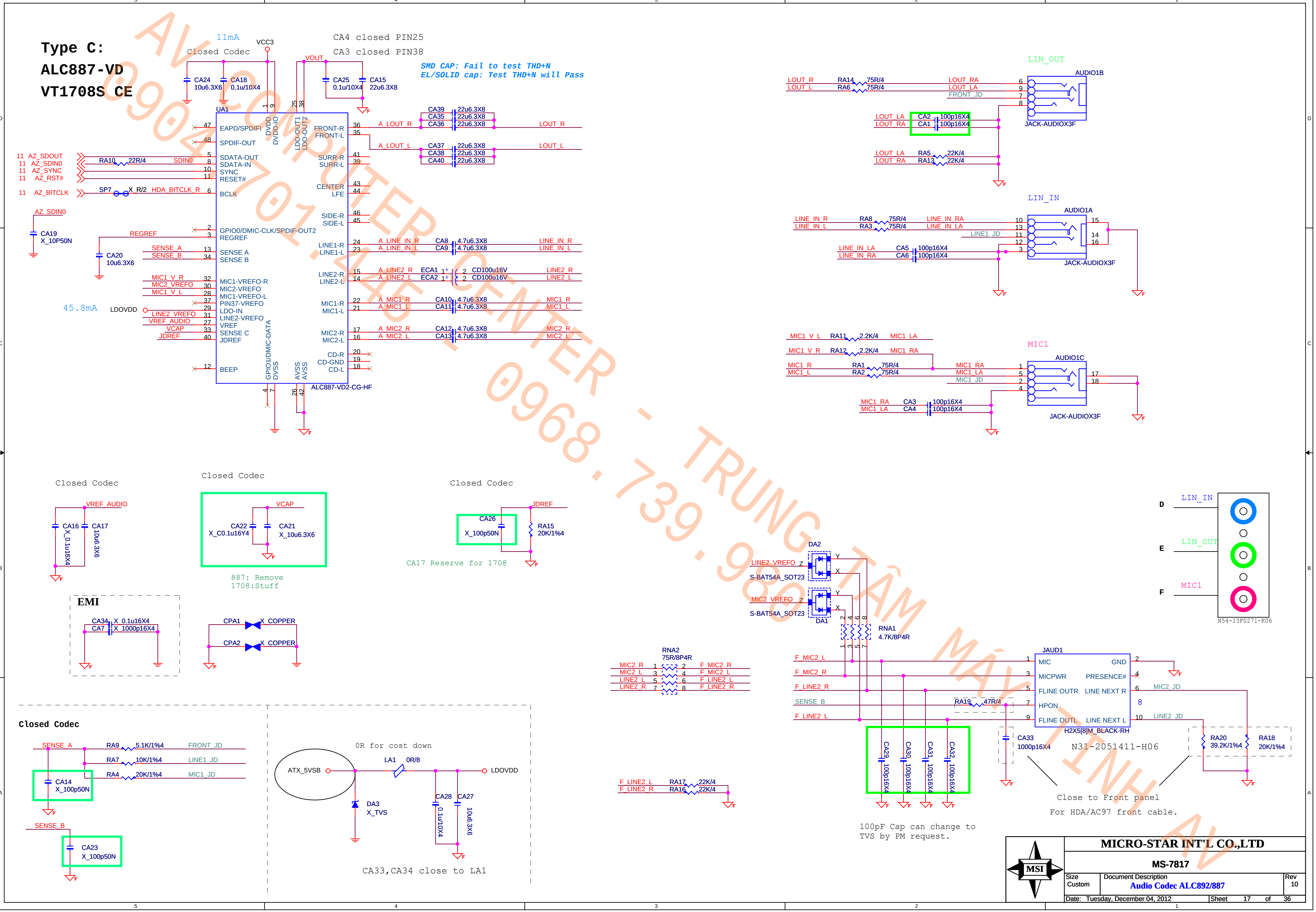
11mA
VCC3
Closed Codec
CA4 closed PIN25
CA3 closed PIN38
VOUT
CA24 10u6.3X6
CA18 0.1u/10X4
CA25 0.1u/10X4
CA15 22u6.3X8
SMD CAP: Fail to test THD+N
EL/SOLID cap: Test THD+N will Pass
UA1
EAPD/SPDIFI
SPDIF-OUT
SDATA-OUT
SDATA-IN
SYNC
RESET#
BCLK
DVDD
DVDD-IO
LDO-OUT1
LDO-OUT2
FRONT-R
FRONT-L
SURR-R
SURR-L
CENTER
LFE
SIDE-R
SIDE-L
GPIO0/DMIC-CLK/SPDIF-OUT2
REGREF
SENSE A
SENSE B
LINE1-R
LINE1-L
LINE2-R
LINE2-L
MIC1-VREFO-R
MIC2-VREFO
MIC1-VREFO-L
PIN37-VREFO
LDO-IN
LINE2-VREFO
VREF
SENSE C
JDREF
MIC1-R
MIC1-L
MIC2-R
MIC2-L
CD-R
CD-GND
CD-L
BEEP
GPIO1/DMIC-DATA
DVSS
AVSS
AVSS
ALC887-VD2-CG-HF
11 AZ_SDOUT
11 AZ_SDIN0
11 AZ_SYNC
11 AZ_RST#
11 AZ_BITCLK
RA10 22R/4
SDIN0
SP7
X_R/2
HDA_BITCLK_R
AZ_SDIN0
CA19 X_10P50N
REGREF
CA20 10u6.3X6
SENSE_A
SENSE_B
MIC1_V_R
MIC2_VREFO
MIC1_V_L
45.8mA
LDOVDD
LINE2_VREFO
VREF_AUDIO
VCAP
JDREF
A_LOUT_R
A_LOUT_L
CA39 22u6.3X8
CA35 22u6.3X8
CA36 22u6.3X8
CA37 22u6.3X8
CA38 22u6.3X8
CA40 22u6.3X8
LOUT_R
LOUT_L
A_LINE_IN_R
A_LINE_IN_L
CA8 4.7u6.3X8
CA9 4.7u6.3X8
LINE_IN_R
LINE_IN_L
A_LINE2_R
A_LINE2_L
ECA1 CD100u16V
ECA2 CD100u16V
LINE2_R
LINE2_L
A_MIC1_R
A_MIC1_L
CA10 4.7u6.3X8
CA11 4.7u6.3X8
MIC1_R
MIC1_L
A_MIC2_R
A_MIC2_L
CA12 4.7u6.3X8
CA13 4.7u6.3X8
MIC2_R
MIC2_L
LIN_OUT
AUDIO1B
LOUT_R
LOUT_L
RA14 75R/4
RA6 75R/4
LOUT_RA
LOUT_LA
FRONT_JD
JACK-AUDIOX3F
LOUT_LA
LOUT_RA
CA2 100p16X4
CA1 100p16X4
RA5 22K/4
RA13 22K/4
LIN_IN
AUDIO1A
LINE_IN_R
LINE_IN_L
RA8 75R/4
RA3 75R/4
LINE_IN_RA
LINE_IN_LA
LINE1_JD
CA5 100p16X4
CA6 100p16X4
JACK-AUDIOX3F
MIC1_V_L
MIC1_V_R
RA11 2.2K/4
RA12 2.2K/4
MIC1_LA
MIC1_RA
MIC1
AUDIO1C
MIC1_R
MIC1_L
RA1 75R/4
RA2 75R/4
MIC1_JD
CA3 100p16X4
CA4 100p16X4
JACK-AUDIOX3F
Closed Codec
VREF_AUDIO
CA16 X_0.1u16X4
CA17 10u6.3X6
VCAP
CA22 X_C0.1u16Y4
CA21 X_10u6.3X6
887: Remove
1708:Stuff
JDREF
CA26 X_100p50N
RA15 20K/1%4
CA17 Reserve for 1708
EMI
CA34 X_0.1u16X4
CA7 X_1000p16X4
CPA1 X_COPPER
CPA2 X_COPPER
D
E
F
LIN_IN
LIN_OUT
MIC1
N54-13F0271-K06
DA2
LINE2_VREFO
S-BAT54A_SOT23
MIC2_VREFO
S-BAT54A_SOT23
DA1
RNA1 4.7K/8P4R
RNA2 75R/8P4R
MIC2_R
MIC2_L
LINE2_L
LINE2_R
F_MIC2_R
F_MIC2_L
F_LINE2_L
F_LINE2_R
JAUD1
F_MIC2_L
F_MIC2_R
F_LINE2_R
SENSE_B
F_LINE2_L
MIC
MICPWR
FLINE OUTR
HPON
FLINE OUTL
GND
PRESENCE#
LINE NEXT R
LINE NEXT L
RA19 47R/4
MIC2_JD
LINE2_JD
H2X5[8]M_BLACK-RH
CA33 1000p16X4
N31-2051411-H06
RA20 39.2K/1%4
RA18 20K/1%4
CA29 100p16X4
CA30 100p16X4
CA31 100p16X4
CA32 100p16X4
Close to Front panel
For HDA/AC97 front cable.
100pF Cap can change to
TVS by PM request.
F_LINE2_L
F_LINE2_R
RA17 22K/4
RA16 22K/4
Closed Codec
SENSE_A
RA9 5.1K/1%4
RA7 10K/1%4
RA4 20K/1%4
FRONT_JD
LINE1_JD
MIC1_JD
CA14 X_100p50N
SENSE_B
CA23 X_100p50N
0R for cost down
ATX_5VSB
LA1 0R/8
LDOVDD
DA3 X_TVS
CA28 0.1u/10X4
CA27 10u6.3X6
CA33,CA34 close to LA1
MSI

MICRO-STAR INT'L CO.,LTD

MS-7817

Size: Custom

Document Description: Audio Codec ALC892/887

Rev: 10

Date: Tuesday, December 04, 2012 | Sheet 17 of 36

RTL8111G Giga LAN

RTL8106E 10/100M LAN

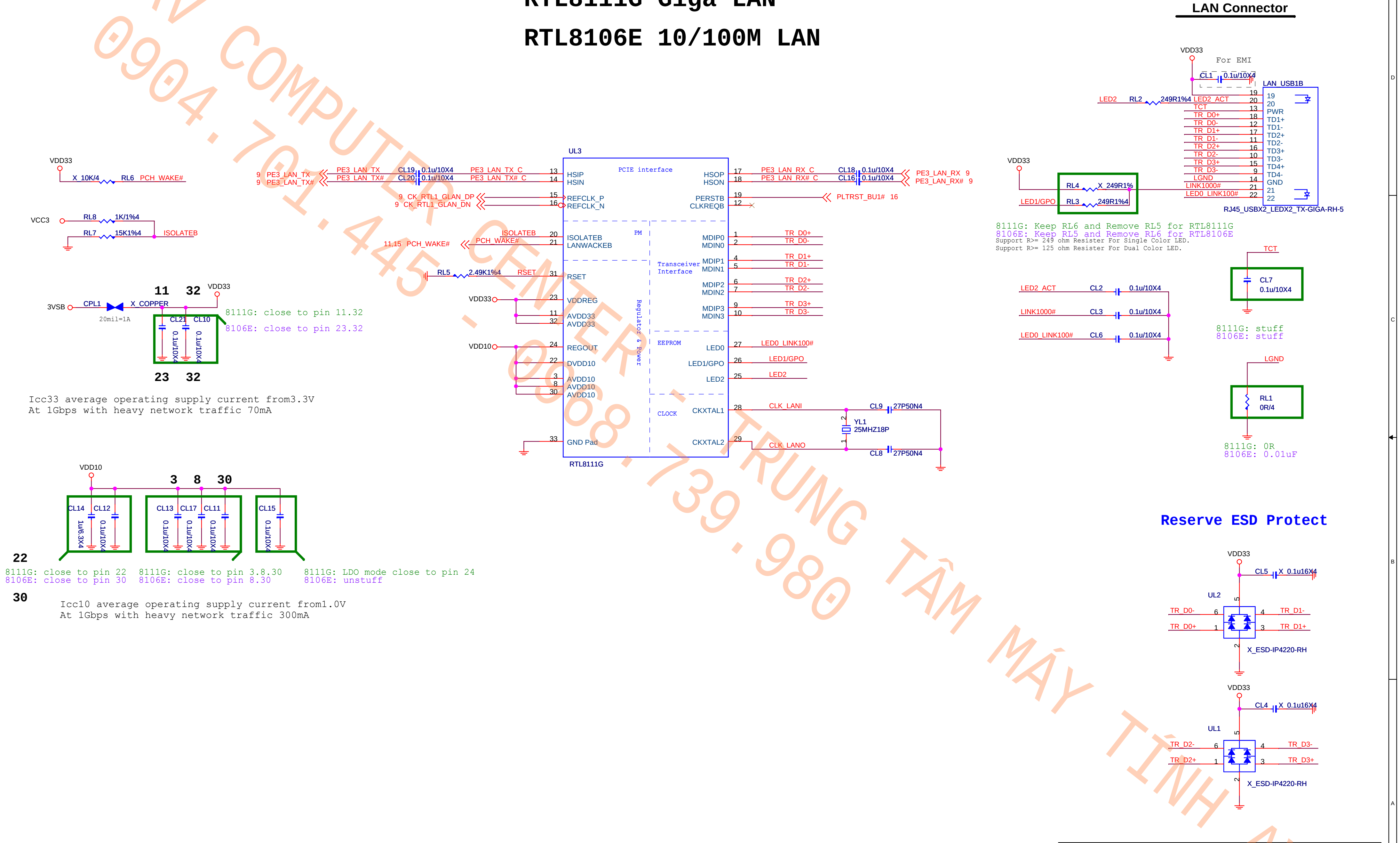

LAN Connector
VDD33
For EMI
CL1 0.1u/10X4
LAN_USB1B
LED2 RL2 249R1%4 LED2_ACT
19
20
TCT 13 PWR
TR_D0+ 18 TD1+
TR_D0- 12 TD1-
TR_D1+ 17 TD2+
TR_D1- 11 TD2-
TR_D2+ 16 TD3+
TR_D2- 10 TD3-
TR_D3+ 15 TD4+
TR_D3- 9 TD4-
LGND 14 GND
LINK1000# 21
LED0_LINK100# 22
RJ45_USBX2_LEDX2_TX-GIGA-RH-5
VDD33
RL4 X_249R1%
LED1/GPO RL3 249R1%4
8111G: Keep RL6 and Remove RL5 for RTL8111G
8106E: Keep RL5 and Remove RL6 for RTL8106E
Support R>= 249 ohm Resister For Single Color LED.
Support R>= 125 ohm Resister For Dual Color LED.
VDD33
X_10K/4 RL6 PCH_WAKE#
VCC3 RL8 1K/1%4
RL7 15K1%4 ISOLATEB
3VSB CPL1 X_COPPER
20mil=1A
11 32 VDD33
CL21 CL10
0.1u/10X4 0.1u/10X4
23 32
8111G: close to pin 11.32
8106E: close to pin 23.32
Icc33 average operating supply current from3.3V
At 1Gbps with heavy network traffic 70mA
UL3
9 PE3_LAN_TX
9 PE3_LAN_TX#
PE3_LAN_TX CL19 0.1u/10X4 PE3_LAN_TX_C 13 HSIP
PE3_LAN_TX# CL20 0.1u/10X4 PE3_LAN_TX#_C 14 HSIN
9 CK_RTL1_GLAN_DP 15 REFCLK_P
9 CK_RTL1_GLAN_DN 16 REFCLK_N
PCIE interface
HSOP 17 PE3_LAN_RX_C CL18 0.1u/10X4 PE3_LAN_RX 9
HSON 18 PE3_LAN_RX#_C CL16 0.1u/10X4 PE3_LAN_RX# 9
PERSTB 19 PLTRST_BU1# 16
CLKREQB 12
ISOLATEB 20 ISOLATEB
11,15 PCH_WAKE# PCH_WAKE# 21 LANWACKEB
PM
RL5 2.49K1%4 RSET 31 RSET
VDD33 23 VDDREG
11 AVDD33
32 AVDD33
Regulator & Power
VDD10 24 REGOUT
22 DVDD10
3 AVDD10
8 AVDD10
30 AVDD10
33 GND Pad
RTL8111G
Transceiver Interface
MDIP0 1 TR_D0+
MDIN0 2 TR_D0-
MDIP1 4 TR_D1+
MDIN1 5 TR_D1-
MDIP2 6 TR_D2+
MDIN2 7 TR_D2-
MDIP3 9 TR_D3+
MDIN3 10 TR_D3-
EEPROM
LED0 27 LED0_LINK100#
LED1/GPO 26 LED1/GPO
LED2 25 LED2
CLOCK
CKXTAL1 28 CLK_LANI CL9 27P50N4
YL1 25MHZ18P
CKXTAL2 29 CLK_LANO CL8 27P50N4
LED2_ACT CL2 0.1u/10X4
LINK1000# CL3 0.1u/10X4
LED0_LINK100# CL6 0.1u/10X4
TCT
CL7 0.1u/10X4
8111G: stuff
8106E: stuff
LGND
RL1 0R/4
8111G: 0R
8106E: 0.01uF
VDD10
3 8 30
CL14 1u/6.3X4
CL12 0.1u/10X4
CL13 0.1u/10X4
CL17 0.1u/10X4
CL11 0.1u/10X4
CL15 0.1u/10X4
22
8111G: close to pin 22
8106E: close to pin 30
8111G: close to pin 3.8.30
8106E: close to pin 8.30
8111G: LDO mode close to pin 24
8106E: unstuff
30
Icc10 average operating supply current from1.0V
At 1Gbps with heavy network traffic 300mA
Reserve ESD Protect
VDD33
CL5 X_0.1u16X4
UL2
TR_D0- 6 4 TR_D1-
TR_D0+ 1 3 TR_D1+
X_ESD-IP4220-RH
VDD33
CL4 X_0.1u16X4
UL1
TR_D2- 6 4 TR_D3-
TR_D2+ 1 3 TR_D3+
X_ESD-IP4220-RH

MICRO-STAR INT'L CO.,LTD

MS-7817

Size	Document Description	Rev
Custom	LAN RTL8111G/8106E	10

Date: Tuesday, December 04, 2012 Sheet 18 of 36

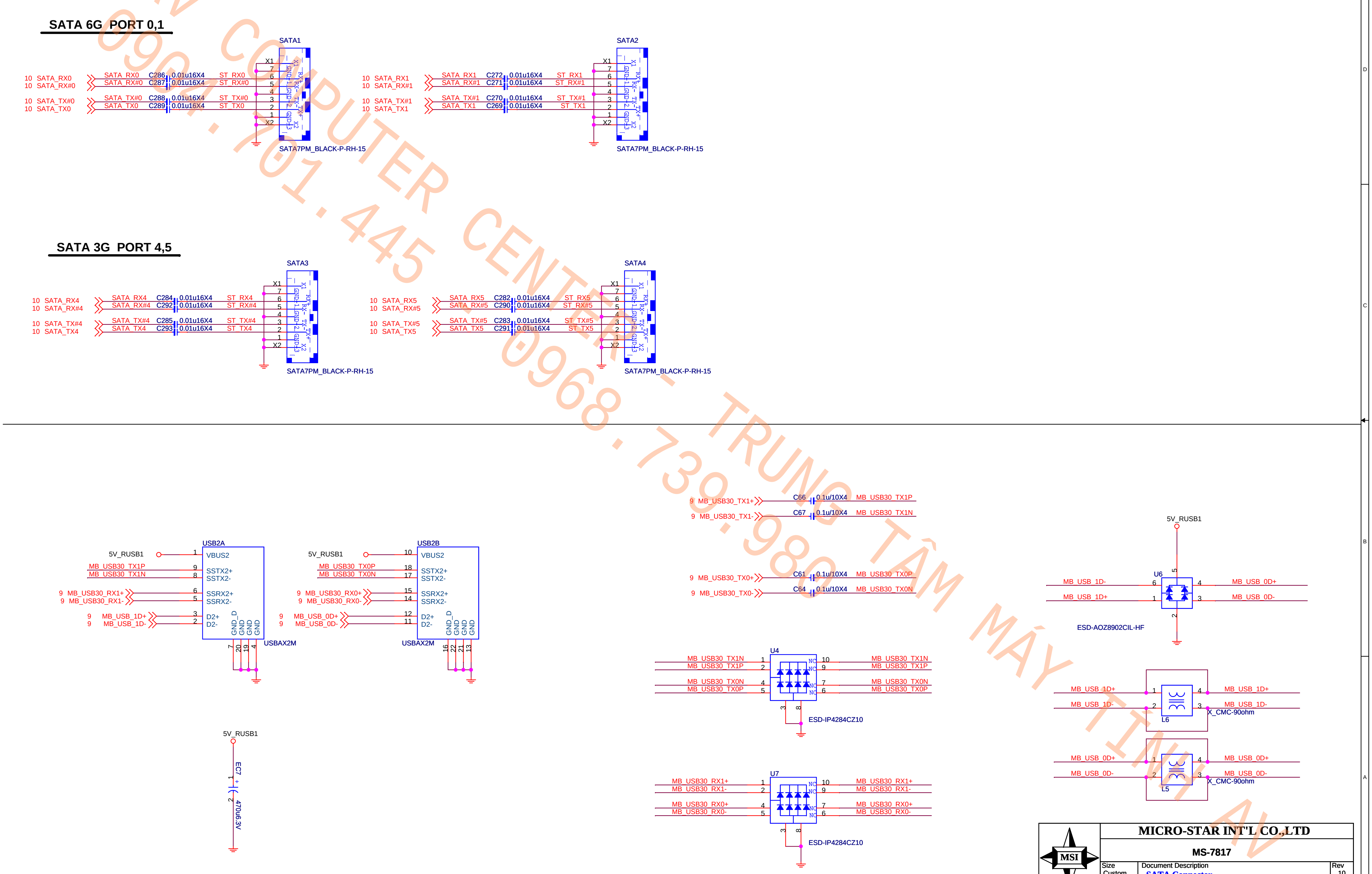
SATA 6G PORT 0,1
SATA1
SATA7PM_BLACK-P-RH-15
10 SATA_RX0
10 SATA_RX#0
10 SATA_TX#0
10 SATA_TX0
SATA_RX0 C286 0.01u16X4 ST_RX0
SATA_RX#0 C287 0.01u16X4 ST_RX#0
SATA_TX#0 C288 0.01u16X4 ST_TX#0
SATA_TX0 C289 0.01u16X4 ST_TX0
X1 7 6 5 4 3 2 1 X2
SATA2
SATA7PM_BLACK-P-RH-15
10 SATA_RX1
10 SATA_RX#1
10 SATA_TX#1
10 SATA_TX1
SATA_RX1 C272 0.01u16X4 ST_RX1
SATA_RX#1 C271 0.01u16X4 ST_RX#1
SATA_TX#1 C270 0.01u16X4 ST_TX#1
SATA_TX1 C269 0.01u16X4 ST_TX1
SATA 3G PORT 4,5
SATA3
SATA7PM_BLACK-P-RH-15
10 SATA_RX4
10 SATA_RX#4
10 SATA_TX#4
10 SATA_TX4
SATA_RX4 C284 0.01u16X4 ST_RX4
SATA_RX#4 C292 0.01u16X4 ST_RX#4
SATA_TX#4 C285 0.01u16X4 ST_TX#4
SATA_TX4 C293 0.01u16X4 ST_TX4
SATA4
SATA7PM_BLACK-P-RH-15
10 SATA_RX5
10 SATA_RX#5
10 SATA_TX#5
10 SATA_TX5
SATA_RX5 C282 0.01u16X4 ST_RX5
SATA_RX#5 C290 0.01u16X4 ST_RX#5
SATA_TX#5 C283 0.01u16X4 ST_TX#5
SATA_TX5 C291 0.01u16X4 ST_TX5
USB2A
5V_RUSB1
VBUS2
MB_USB30_TX1P
MB_USB30_TX1N
SSTX2+
SSTX2-
9 MB_USB30_RX1+
9 MB_USB30_RX1-
SSRX2+
SSRX2-
9 MB_USB_1D+
9 MB_USB_1D-
D2+
D2-
GND_D GND GND GND
USBAX2M
USB2B
5V_RUSB1
MB_USB30_TX0P
MB_USB30_TX0N
9 MB_USB30_RX0+
9 MB_USB30_RX0-
9 MB_USB_0D+
9 MB_USB_0D-
USBAX2M
5V_RUSB1
EC7
470u6.3V
9 MB_USB30_TX1+ C66 0.1u/10X4 MB_USB30_TX1P
9 MB_USB30_TX1- C67 0.1u/10X4 MB_USB30_TX1N
9 MB_USB30_TX0+ C61 0.1u/10X4 MB_USB30_TX0P
9 MB_USB30_TX0- C64 0.1u/10X4 MB_USB30_TX0N
U4
MB_USB30_TX1N
MB_USB30_TX1P
MB_USB30_TX0N
MB_USB30_TX0P
ESD-IP4284CZ10
U7
MB_USB30_RX1+
MB_USB30_RX1-
MB_USB30_RX0+
MB_USB30_RX0-
ESD-IP4284CZ10
5V_RUSB1
U6
MB_USB_1D-
MB_USB_1D+
MB_USB_0D+
MB_USB_0D-
ESD-AOZ8902CIL-HF
L6
X_CMC-90ohm
L5
X_CMC-90ohm
5 4 3 2 1
D C B A

MICRO-STAR INT'L CO.,LTD

MSI

MS-7817

Size	Document Description	Rev
Custom	SATA Connector	10

Date: Tuesday, December 04, 2012 | Sheet 19 of 36

Type C: jumper +Fuse

PCH/FCH side: OC# pull high to +3VSB

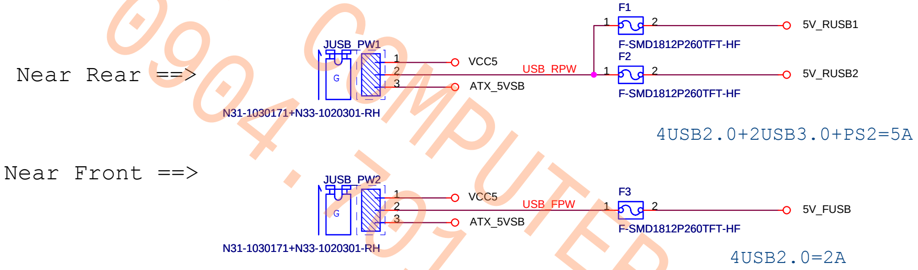
Near Rear ==>
JUSB_PW1
1
2
3
G
VCC5
USB_RPW
ATX_5VSB
N31-1030171+N33-1020301-RH
F1
1
2
F-SMD1812P260TFT-HF
5V_RUSB1
F2
1
2
F-SMD1812P260TFT-HF
5V_RUSB2
4USB2.0+2USB3.0+PS2=5A
Near Front ==>
JUSB_PW2
1
2
3
G
VCC5
USB_FPW
ATX_5VSB
N31-1030171+N33-1020301-RH
F3
1
2
F-SMD1812P260TFT-HF
5V_FUSB
4USB2.0=2A

Default VCC5 (PIN1-2)

JUSB_PW	BIOS Menu	Wake up support
1-2	EUP Enable	Not support
	EUP Disable	
2-3	EUP Enable	Not support
	EUP Disable	support

D08-2000300-P16 (Itrip=3.5A; 0.003ohm) support 6 USB ports (3A)
D08-0300700-P16 (Itrip=2.6A; 0.015ohm) support 4 USB ports (2A)
D08-0100110-P16 (Itrip=1.1A; 0.04ohm) support 2 usb 2.0 ports (1A)

FRONT USB PORT 8,9

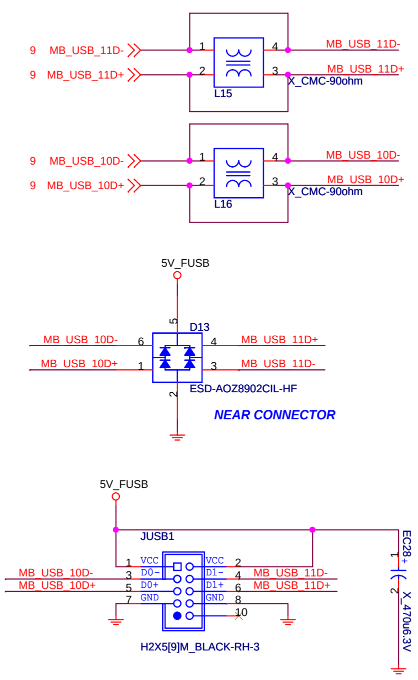
9 MB_USB_11D-
9 MB_USB_11D+
1
2
4
3
L15
MB_USB_11D-
MB_USB_11D+
X_CMC-90ohm
9 MB_USB_10D-
9 MB_USB_10D+
1
2
4
3
L16
MB_USB_10D-
MB_USB_10D+
X_CMC-90ohm
5V_FUSB
D13
MB_USB_10D-
MB_USB_10D+
6
1
5
4
3
2
MB_USB_11D+
MB_USB_11D-
ESD-AOZ8902CIL-HF
NEAR CONNECTOR
5V_FUSB
JUSB1
VCC
D0-
D0+
GND
VCC
D1-
D1+
GND
1
3
5
7
2
4
6
8
10
MB_USB_10D-
MB_USB_10D+
MB_USB_11D-
MB_USB_11D+
H2X5[9]M_BLACK-RH-3
EC28
1
+
2
X_470u6.3V

FRONT USB PORT 10.11

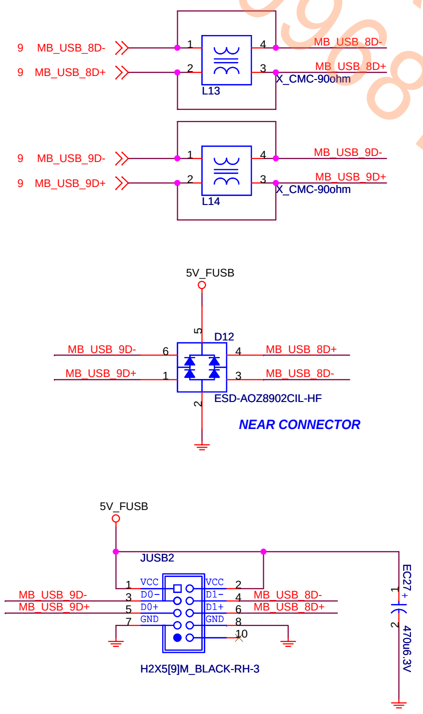
9 MB_USB_8D-
9 MB_USB_8D+
1
2
4
3
L13
MB_USB_8D-
MB_USB_8D+
X_CMC-90ohm
9 MB_USB_9D-
9 MB_USB_9D+
1
2
4
3
L14
MB_USB_9D-
MB_USB_9D+
X_CMC-90ohm
5V_FUSB
D12
MB_USB_9D-
MB_USB_9D+
6
1
5
4
3
2
MB_USB_8D+
MB_USB_8D-
ESD-AOZ8902CIL-HF
NEAR CONNECTOR
5V_FUSB
JUSB2
VCC
D0-
D0+
GND
VCC
D1-
D1+
GND
1
3
5
7
2
4
6
8
10
MB_USB_9D-
MB_USB_9D+
MB_USB_8D-
MB_USB_8D+
H2X5[9]M_BLACK-RH-3
EC27
1
+
2
470u6.3V

FRONT USB PORT 10.11

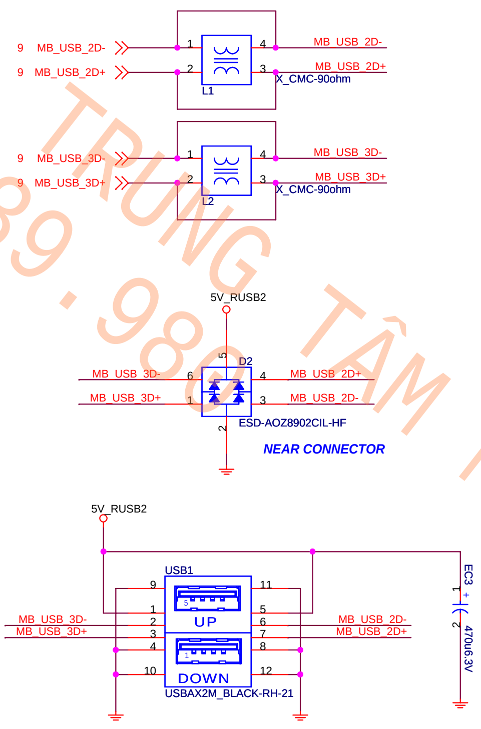
9 MB_USB_2D-
9 MB_USB_2D+
1
2
4
3
L1
MB_USB_2D-
MB_USB_2D+
X_CMC-90ohm
9 MB_USB_3D-
9 MB_USB_3D+
1
2
4
3
L2
MB_USB_3D-
MB_USB_3D+
X_CMC-90ohm
5V_RUSB2
D2
MB_USB_3D-
MB_USB_3D+
6
1
5
4
3
2
MB_USB_2D+
MB_USB_2D-
ESD-AOZ8902CIL-HF
NEAR CONNECTOR
5V_RUSB2
USB1
9
1
2
3
4
10
11
5
6
7
8
12
UP
DOWN
MB_USB_3D-
MB_USB_3D+
MB_USB_2D-
MB_USB_2D+
USBAX2M_BLACK-RH-21
EC3
1
+
2
470u6.3V

FRONT USB PORT 10.11

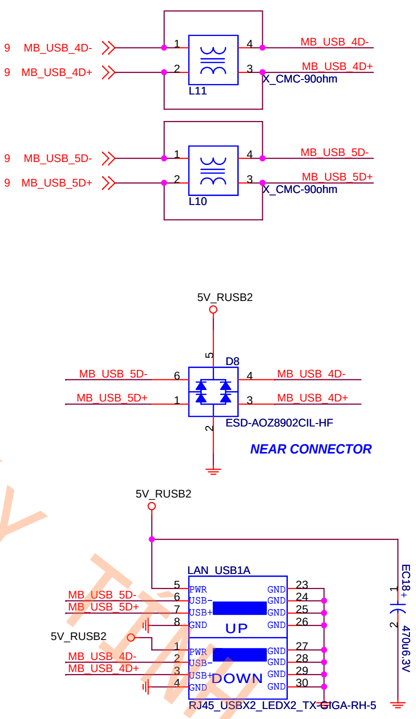
9 MB_USB_4D-
9 MB_USB_4D+
1
2
4
3
L11
MB_USB_4D-
MB_USB_4D+
X_CMC-90ohm
9 MB_USB_5D-
9 MB_USB_5D+
1
2
4
3
L10
MB_USB_5D-
MB_USB_5D+
X_CMC-90ohm
5V_RUSB2
D8
MB_USB_5D-
MB_USB_5D+
6
1
5
4
3
2
MB_USB_4D-
MB_USB_4D+
ESD-AOZ8902CIL-HF
NEAR CONNECTOR
5V_RUSB2
LAN_USB1A
5 PWR
6 USB-
7 USB+
8 GND
UP
5V_RUSB2
1 PWR
2 USB-
3 USB+
4 GND
DOWN
GND 23
GND 24
GND 25
GND 26
GND 27
GND 28
GND 29
GND 30
MB_USB_5D-
MB_USB_5D+
MB_USB_4D-
MB_USB_4D+
RJ45_USBX2_LEDX2_TX-GIGA-RH-5
EC18
1
+
2
470u6.3V

AN COMPUTER 0904.101.445 CENTER 0968.739.986 TRUNG TÂM MÁY TÍNH AN

MICRO-STAR INT'L CO.,LTD

MS-7817

Size	Document Description	Rev
Custom	Rear I/O & USB2.0 Connector	10

Date: Tuesday, December 04, 2012 | Sheet 20 of 36

DVI level shifter

VGA: resolution of 2048x1536 pixels with 32-bit color at 75 Hz (4:3 QXGA)

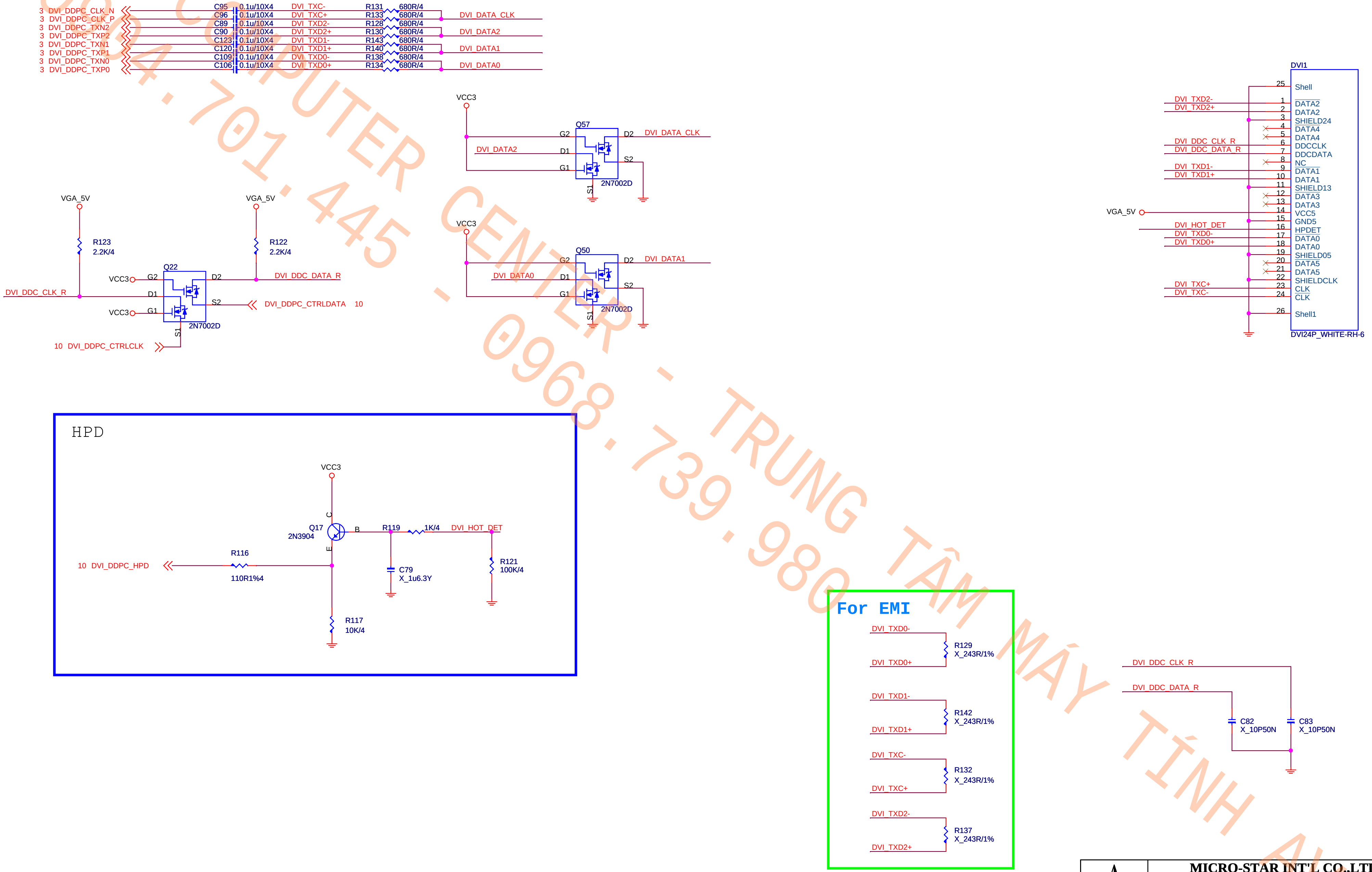

3 DVI_DDPC_CLK_N
3 DVI_DDPC_CLK_P
3 DVI_DDPC_TXN2
3 DVI_DDPC_TXP2
3 DVI_DDPC_TXN1
3 DVI_DDPC_TXP1
3 DVI_DDPC_TXN0
3 DVI_DDPC_TXP0
C95 0.1u/10X4
C96 0.1u/10X4
C89 0.1u/10X4
C90 0.1u/10X4
C123 0.1u/10X4
C120 0.1u/10X4
C109 0.1u/10X4
C106 0.1u/10X4
DVI_TXC-
DVI_TXC+
DVI_TXD2-
DVI_TXD2+
DVI_TXD1-
DVI_TXD1+
DVI_TXD0-
DVI_TXD0+
R131 680R/4
R133 680R/4
R128 680R/4
R130 680R/4
R143 680R/4
R140 680R/4
R138 680R/4
R134 680R/4
DVI_DATA_CLK
DVI_DATA2
DVI_DATA1
DVI_DATA0
VCC3
Q57
G2
D2
DVI_DATA_CLK
DVI_DATA2
D1
G1
S2
S1
2N7002D
VCC3
Q50
G2
D2
DVI_DATA1
DVI_DATA0
D1
G1
S2
S1
2N7002D
VGA_5V
R123
2.2K/4
VGA_5V
R122
2.2K/4
Q22
VCC3
G2
D2
DVI_DDC_DATA_R
DVI_DDC_CLK_R
D1
S2
DVI_DDPC_CTRLDATA 10
VCC3
G1
S1
2N7002D
10 DVI_DDPC_CTRLCLK
DVI1
25 Shell
DVI_TXD2- 1 DATA2
DVI_TXD2+ 2 DATA2
3 SHIELD24
4 DATA4
5 DATA4
DVI_DDC_CLK_R 6 DDCCLK
DVI_DDC_DATA_R 7 DDCDATA
8 NC
DVI_TXD1- 9 DATA1
DVI_TXD1+ 10 DATA1
11 SHIELD13
12 DATA3
13 DATA3
VGA_5V 14 VCC5
15 GND5
DVI_HOT_DET 16 HPDET
DVI_TXD0- 17 DATA0
DVI_TXD0+ 18 DATA0
19 SHIELD05
20 DATA5
21 DATA5
22 SHIELDCLK
DVI_TXC+ 23 CLK
DVI_TXC- 24 CLK
26 Shell1
DVI24P_WHITE-RH-6
HPD
VCC3
C
Q17
2N3904
B
E
R119
1K/4
DVI_HOT_DET
10 DVI_DDPC_HPD
R116
110R1%4
C79
X_1u6.3Y
R121
100K/4
R117
10K/4
For EMI
DVI_TXD0-
R129
X_243R/1%
DVI_TXD0+
DVI_TXD1-
R142
X_243R/1%
DVI_TXD1+
DVI_TXC-
R132
X_243R/1%
DVI_TXC+
DVI_TXD2-
R137
X_243R/1%
DVI_TXD2+
DVI_DDC_CLK_R
DVI_DDC_DATA_R
C82
X_10P50N
C83
X_10P50N

MICRO-STAR INT'L CO.,LTD

MS-7817

Size	Document Description	Rev
Custom	**DVI transfer**	10

Date: Tuesday, December 04, 2012 Sheet 21 of 36

HDMI, DVI : 1920x1200 at 60 Hz (16:10 WUXGA)

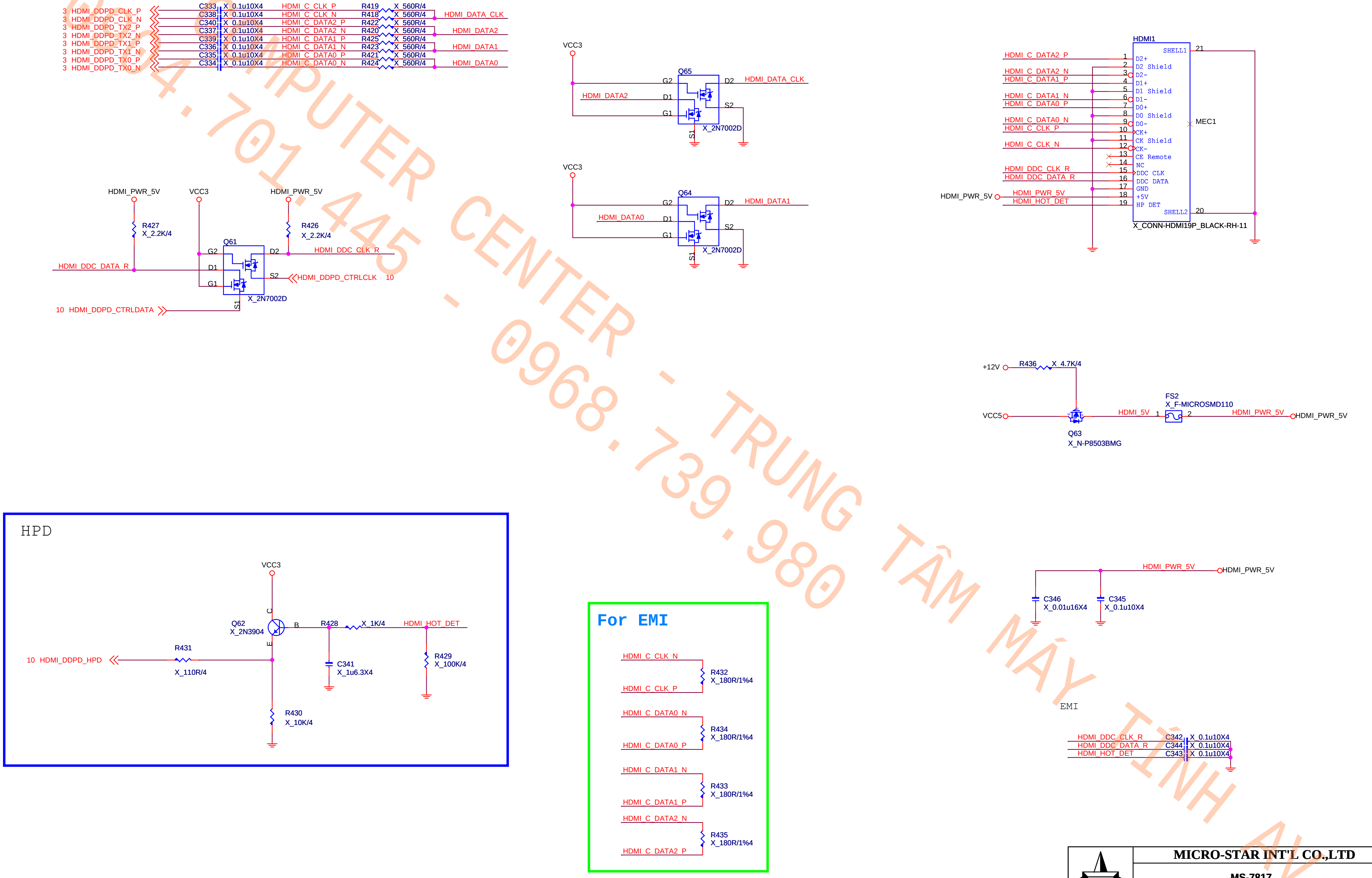

3 HDMI_DDPD_CLK_P
3 HDMI_DDPD_CLK_N
3 HDMI_DDPD_TX2_P
3 HDMI_DDPD_TX2_N
3 HDMI_DDPD_TX1_P
3 HDMI_DDPD_TX1_N
3 HDMI_DDPD_TX0_P
3 HDMI_DDPD_TX0_N
C333 X_0.1u10X4
C338 X_0.1u10X4
C340 X_0.1u10X4
C337 X_0.1u10X4
C339 X_0.1u10X4
C336 X_0.1u10X4
C335 X_0.1u10X4
C334 X_0.1u10X4
HDMI_C_CLK_P
HDMI_C_CLK_N
HDMI_C_DATA2_P
HDMI_C_DATA2_N
HDMI_C_DATA1_P
HDMI_C_DATA1_N
HDMI_C_DATA0_P
HDMI_C_DATA0_N
R419 X_560R/4
R418 X_560R/4
R422 X_560R/4
R420 X_560R/4
R425 X_560R/4
R423 X_560R/4
R421 X_560R/4
R424 X_560R/4
HDMI_DATA_CLK
HDMI_DATA2
HDMI_DATA1
HDMI_DATA0
VCC3
Q65
G2
D2
HDMI_DATA_CLK
HDMI_DATA2
D1
S2
G1
X_2N7002D
S1
VCC3
Q64
G2
D2
HDMI_DATA1
HDMI_DATA0
D1
S2
G1
X_2N7002D
S1
HDMI1
SHELL1 21
HDMI_C_DATA2_P 1 D2+
2 D2 Shield
HDMI_C_DATA2_N 3 D2-
HDMI_C_DATA1_P 4 D1+
5 D1 Shield
HDMI_C_DATA1_N 6 D1-
HDMI_C_DATA0_P 7 D0+
8 D0 Shield
HDMI_C_DATA0_N 9 D0-
HDMI_C_CLK_P 10 CK+
11 CK Shield
HDMI_C_CLK_N 12 CK-
13 CE Remote
14 NC
HDMI_DDC_CLK_R 15 DDC CLK
HDMI_DDC_DATA_R 16 DDC DATA
17 GND
HDMI_PWR_5V HDMI_PWR_5V 18 +5V
HDMI_HOT_DET 19 HP DET
SHELL2 20
MEC1
X_CONN-HDMI19P_BLACK-RH-11
HDMI_PWR_5V
R427 X_2.2K/4
VCC3
HDMI_PWR_5V
R426 X_2.2K/4
Q61
G2
D2
HDMI_DDC_CLK_R
HDMI_DDC_DATA_R
D1
G1
S2
HDMI_DDPD_CTRLCLK 10
X_2N7002D
S1
10 HDMI_DDPD_CTRLDATA
+12V
R436 X_4.7K/4
VCC5
Q63
X_N-P8503BMG
HDMI_5V
FS2
X_F-MICROSMD110
1 2
HDMI_PWR_5V
HDMI_PWR_5V
HPD
VCC3
Q62
X_2N3904
C
B
E
R428 X_1K/4
HDMI_HOT_DET
R431
X_110R/4
10 HDMI_DDPD_HPD
C341 X_1u6.3X4
R429 X_100K/4
R430 X_10K/4
For EMI
HDMI_C_CLK_N
R432 X_180R/1%4
HDMI_C_CLK_P
HDMI_C_DATA0_N
R434 X_180R/1%4
HDMI_C_DATA0_P
HDMI_C_DATA1_N
R433 X_180R/1%4
HDMI_C_DATA1_P
HDMI_C_DATA2_N
R435 X_180R/1%4
HDMI_C_DATA2_P
HDMI_PWR_5V
HDMI_PWR_5V
C346 X_0.01u16X4
C345 X_0.1u10X4
EMI
HDMI_DDC_CLK_R
HDMI_DDC_DATA_R
HDMI_HOT_DET
C342 X_0.1u10X4
C344 X_0.1u10X4
C343 X_0.1u10X4
5 4 3 2 1
D C B A

MICRO-STAR INT'L CO.,LTD

MSI

MS-7817

Size Custom

Document Description **HDMI Connector**

Rev 10

Date: Wednesday, December 05, 2012

Sheet 22 of 36

D-Sub

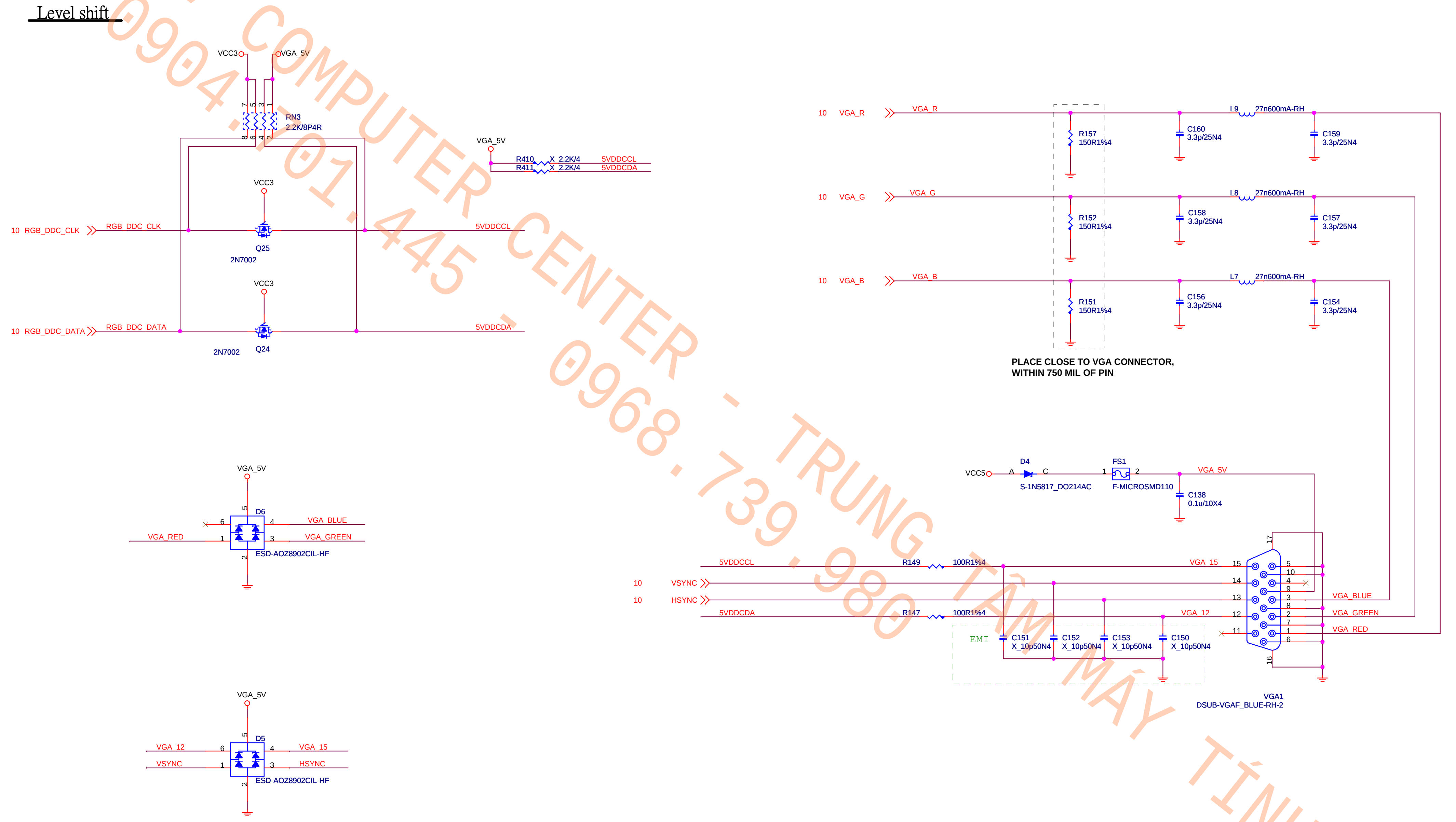

Level shift
VCC3
VGA_5V
RN3
2.2K/8P4R
7 5 3 1
8 6 4 2
VGA_5V
R410 X_2.2K/4 5VDDCCL
R411 X_2.2K/4 5VDDCDA
VCC3
10 RGB_DDC_CLK
RGB_DDC_CLK
5VDDCCL
Q25
2N7002
VCC3
10 RGB_DDC_DATA
RGB_DDC_DATA
5VDDCDA
2N7002
Q24
10 VGA_R
VGA_R
R157
150R1%4
C160
3.3p/25N4
L9 27n600mA-RH
C159
3.3p/25N4
10 VGA_G
VGA_G
R152
150R1%4
C158
3.3p/25N4
L8 27n600mA-RH
C157
3.3p/25N4
10 VGA_B
VGA_B
R151
150R1%4
C156
3.3p/25N4
L7 27n600mA-RH
C154
3.3p/25N4
PLACE CLOSE TO VGA CONNECTOR,
WITHIN 750 MIL OF PIN
VGA_5V
D6
VGA_BLUE
VGA_RED
VGA_GREEN
ESD-AOZ8902CIL-HF
VCC5
D4
A C
S-1N5817_DO214AC
FS1
1 2
F-MICROSMD110
VGA_5V
C138
0.1u/10X4
5VDDCCL
R149
100R1%4
VGA_15
10 VSYNC
10 HSYNC
5VDDCDA
R147
100R1%4
VGA_12
EMI
C151
X_10p50N4
C152
X_10p50N4
C153
X_10p50N4
C150
X_10p50N4
17
15 14 13 12 11
5 10 4 9 3 8 2 7 1 6
16
VGA_BLUE
VGA_GREEN
VGA_RED
VGA1
DSUB-VGAF_BLUE-RH-2
VGA_5V
D5
VGA_12
VSYNC
VGA_15
HSYNC
ESD-AOZ8902CIL-HF

MICRO-STAR INT'L CO.,LTD

MS-7817

Size	Document Description	Rev
Custom	VGA Connector	10

Date: Tuesday, December 04, 2012 | Sheet 23 of 36

5VDIMM FOR DDR

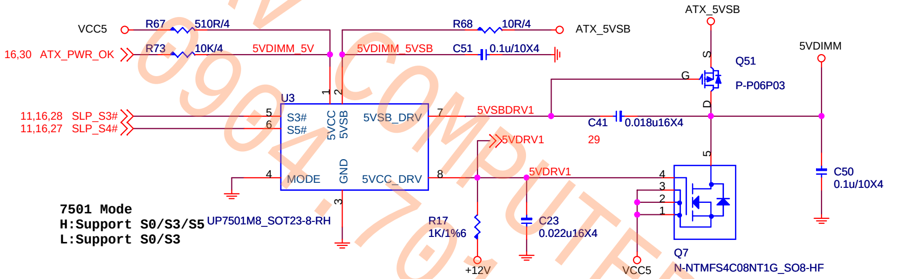
VCC5
R67 510R/4
R68 10R/4
ATX_5VSB
16,30 ATX_PWR_OK
R73 10K/4
5VDIMM_5V
5VDIMM_5VSB
C51 0.1u/10X4
ATX_5VSB
Q51
P-P06P03
5VDIMM
11,16,28 SLP_S3#
11,16,27 SLP_S4#
U3
S3#
S5#
5VCC
5VSB
5VSB_DRV
MODE
GND
5VCC_DRV
5VSBDRV1
C41 0.018u16X4
5VDRV1 29
5VDRV1
C50 0.1u/10X4
UP7501M8_SOT23-8-RH
R17 1K/1%6
C23 0.022u16X4
+12V
VCC5
Q7
N-NTMFS4C08NT1G_SO8-HF

7501 Mode
H:Support S0/S3/S5
L:Support S0/S3

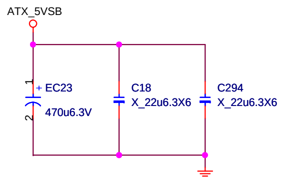
ATX_5VSB
EC23
470u6.3V
C18
X_22u6.3X6
C294
X_22u6.3X6

For power 700W solution (only for uP7501+uP7506 for 3VSB solution)
The power supply VCC3 delay 12ms after VCC5 assert.
The chip U7501 5VDRV1 work when the VCC5 ready
(When VCC5 up to 4.2V and the 5VDRV1 delay 6ms assert), but
VCC3 not ready and let the 3VSB sequence fail.

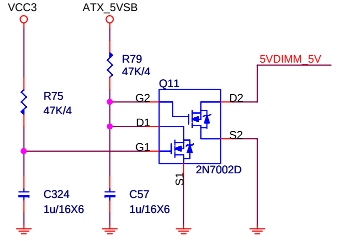
VCC3
ATX_5VSB
R79 47K/4
5VDIMM_5V
Q11
R75 47K/4
G2
D2
D1
G1
S2
S1
2N7002D
C324 1u/16X6
C57 1u/16X6

Patch coolermaster 700w power sequence

3VSB

3VSB supply to PCH and other device.
Turn off when Deep S3/S5 by 5VSB off.

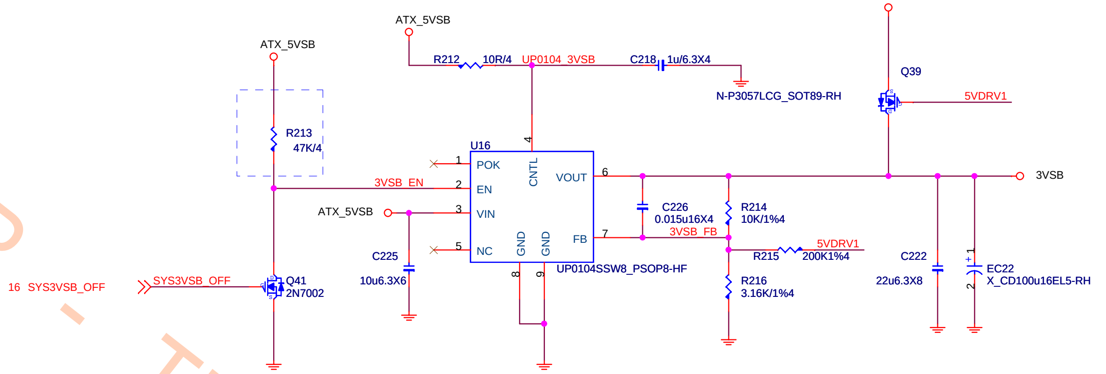
ATX_5VSB
VCC3
R212 10R/4
UP0104_3VSB
C218 1u/6.3X4
Q39
N-P3057LCG_SOT89-RH
5VDRV1
ATX_5VSB
R213 47K/4
U16
POK
EN
VIN
NC
CNTL
VOUT
FB
GND
GND
3VSB_EN
ATX_5VSB
3VSB
C226 0.015u16X4
R214 10K/1%4
3VSB_FB
5VDRV1
R215 200K1%4
C225 10u6.3X6
UP0104SSW8_PSOP8-HF
R216 3.16K/1%4
C222 22u6.3X8
EC22 X_CD100u16EL5-RH
16 SYS3VSB_OFF
SYS3VSB_OFF
Q41 2N7002

3VA

20mA

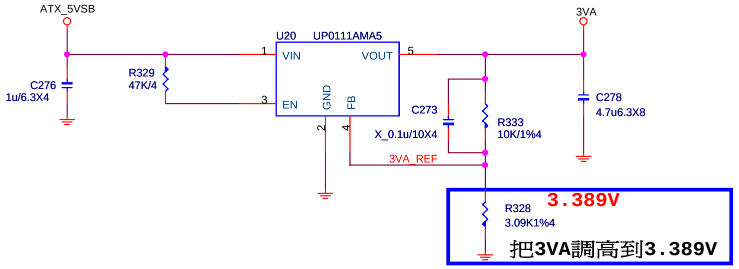
ATX_5VSB
3VA
U20 UP0111AMA5
VIN
VOUT
EN
GND
FB
C276 1u/6.3X4
R329 47K/4
C273 X_0.1u/10X4
R333 10K/1%4
C278 4.7u6.3X8
3VA_REF
R328 3.09K1%4
3.389V

把3VA調高到3.389V

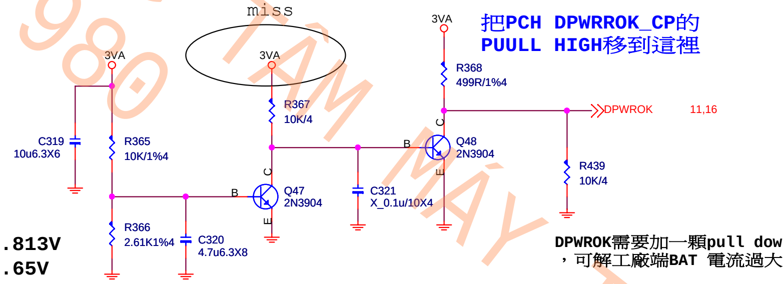
miss
3VA
3VA
3VA
C319 10u6.3X6
R365 10K/1%4
R367 10K/4
R368 499R/1%4
DPWROK 11,16
Q48 2N3904
Q47 2N3904
C321 X_0.1u/10X4
R439 10K/4
R366 2.61K1%4
C320 4.7u6.3X8

把PCH DPWRROK_CP的
PUULL HIGH移到這裡

3.389V分壓=0.813V
2.71V分壓=0.65V

DPWROK需要加一顆pull down 10k電阻
，可解工廠端BAT 電流過大問題

FOR DPWROK跟3VA的POWER
DOWN的時序(S5-->G3)

MICRO-STAR INT'L CO.,LTD		
MS-7817		
Size Custom	Document Description ACPI controller UPI	Rev 10
Date: Tuesday, December 04, 2012	Sheet 24 of 36	

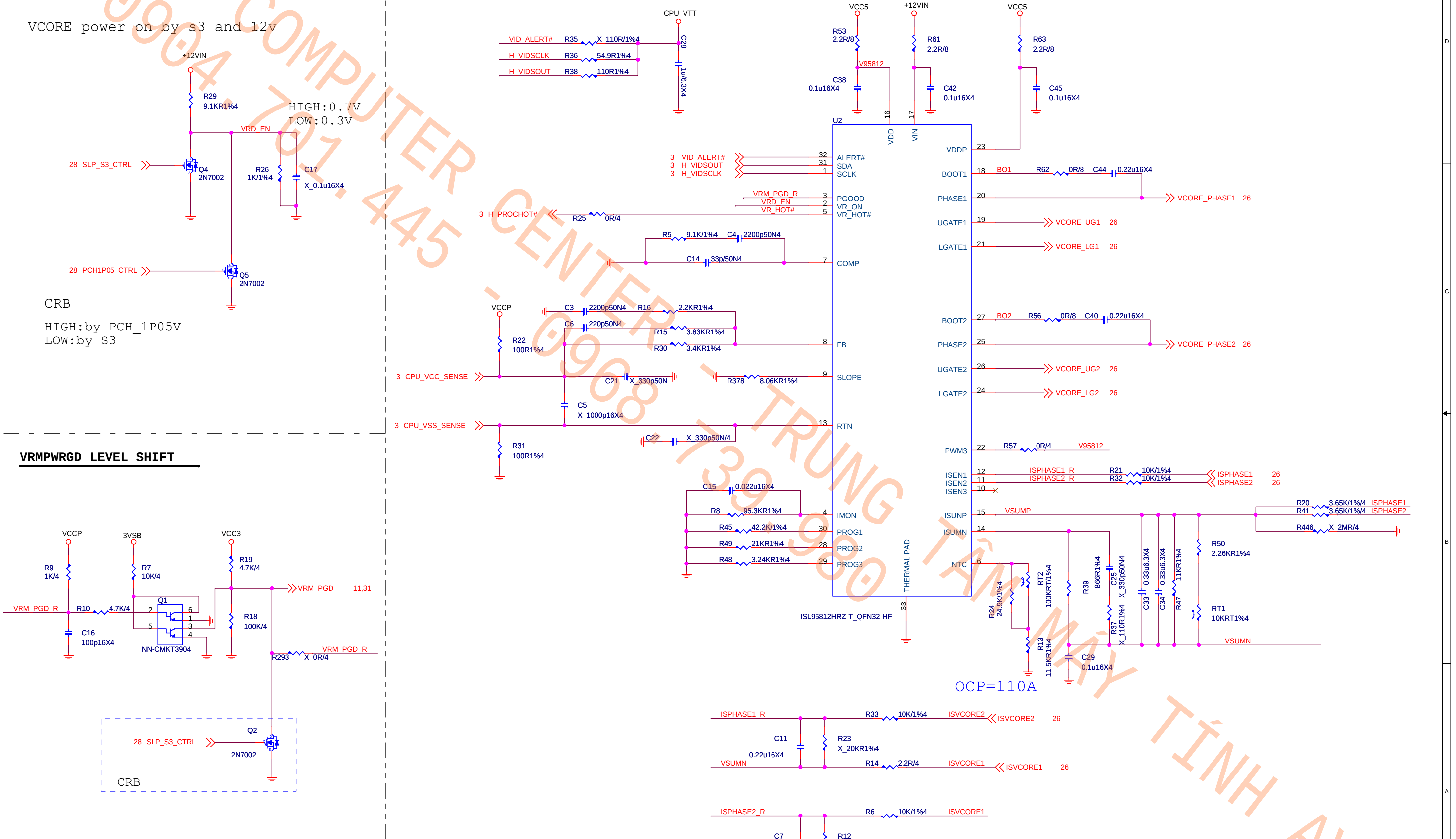
VCORE power on by s3 and 12v
+12VIN
R29
9.1KR1%4
VRD_EN
HIGH:0.7V
LOW:0.3V
28 SLP_S3_CTRL
Q4
2N7002
R26
1K/1%4
C17
X_0.1u16X4
28 PCH1P05_CTRL
Q5
2N7002
CRB
HIGH:by PCH_1P05V
LOW:by S3
VRMPWRGD LEVEL SHIFT
VCCP
3VSB
VCC3
R9
1K/4
R7
10K/4
R19
4.7K/4
VRM_PGD_R
R10
4.7K/4
Q1
NN-CMKT3904
C16
100p16X4
R18
100K/4
VRM_PGD
11,31
R293
X_0R/4
VRM_PGD_R
28 SLP_S3_CTRL
Q2
2N7002
CRB
CPU_VTT
VID_ALERT#
R35
X_110R/1%4
H_VIDSCLK
R36
54.9R1%4
H_VIDSOUT
R38
110R1%4
C28
1u/6.3X4
3 VID_ALERT#
3 H_VIDSOUT
3 H_VIDSCLK
VRM_PGD_R
VRD_EN
VR_HOT#
3 H_PROCHOT#
R25
0R/4
R5
9.1K/1%4
C4
2200p50N4
C14
33p/50N4
VCCP
C3
2200p50N4
R16
2.2KR1%4
C6
220p50N4
R15
3.83KR1%4
R30
3.4KR1%4
R22
100R1%4
3 CPU_VCC_SENSE
C21
X_330p50N
R378
8.06KR1%4
C5
X_1000p16X4
3 CPU_VSS_SENSE
C22
X_330p50N/4
R31
100R1%4
C15
0.022u16X4
R8
95.3KR1%4
R45
42.2K/1%4
R49
21KR1%4
R48
3.24KR1%4
VCC5
R53
2.2R/8
V95812
C38
0.1u16X4
+12VIN
R61
2.2R/8
C42
0.1u16X4
VCC5
R63
2.2R/8
C45
0.1u16X4
U2
VDD 16
VIN 17
ALERT# 32
SDA 31
SCLK 1
PGOOD 3
VR_ON 2
VR_HOT# 5
COMP 7
FB 8
SLOPE 9
RTN 13
IMON 4
PROG1 30
PROG2 28
PROG3 29
THERMAL PAD 33
ISL95812HRZ-T_QFN32-HF
VDDP 23
BOOT1 18
PHASE1 20
UGATE1 19
LGATE1 21
BOOT2 27
PHASE2 25
UGATE2 26
LGATE2 24
PWM3 22
ISEN1 12
ISEN2 11
ISEN3 10
ISUNP 15
ISUMN 14
NTC 6
BO1
R62
0R/8
C44
0.22u16X4
VCORE_PHASE1 26
VCORE_UG1 26
VCORE_LG1 26
BO2
R56
0R/8
C40
0.22u16X4
VCORE_PHASE2 26
VCORE_UG2 26
VCORE_LG2 26
R57
0R/4
V95812
ISPHASE1_R
ISPHASE2_R
R21
10K/1%4
R32
10K/1%4
ISPHASE1 26
ISPHASE2 26
VSUMP
R20
3.65K/1%/4
ISPHASE1
R41
3.65K/1%/4
ISPHASE2
R446
X_2MR/4
R50
2.26KR1%4
RT1
10KRT1%4
VSUMN
RT2
100KRT/1%4
R24
24.9K/1%4
R13
11.5KR1%4
R39
866R1%4
C25
X_330p50N4
R37
X_110R1%4
C29
0.1u16X4
C33
0.33u6.3X4
C34
0.33u6.3X4
R47
11KR1%4
OCP=110A
ISPHASE1_R
R33
10K/1%4
ISVCORE2
ISVCORE2 26
C11
0.22u16X4
R23
X_20KR1%4
VSUMN
R14
2.2R/4
ISVCORE1
ISVCORE1 26
ISPHASE2_R
R6
10K/1%4
ISVCORE1
C7
0.22u16X4
R12
X_20KR1%4
VSUMN
R42
2.2R/4
ISVCORE2

MSI

MICRO-STAR INT'L CO.,LTD

MS-7817

Size	Document Description	Rev
Custom	VRD12.5 - ISL95818	10

Date: Tuesday, December 04, 2012 Sheet 25 of 36

VCCP POWER

VCORE ICC MAX70A ICCTDC:47A 65W

LL:2.5m ohm

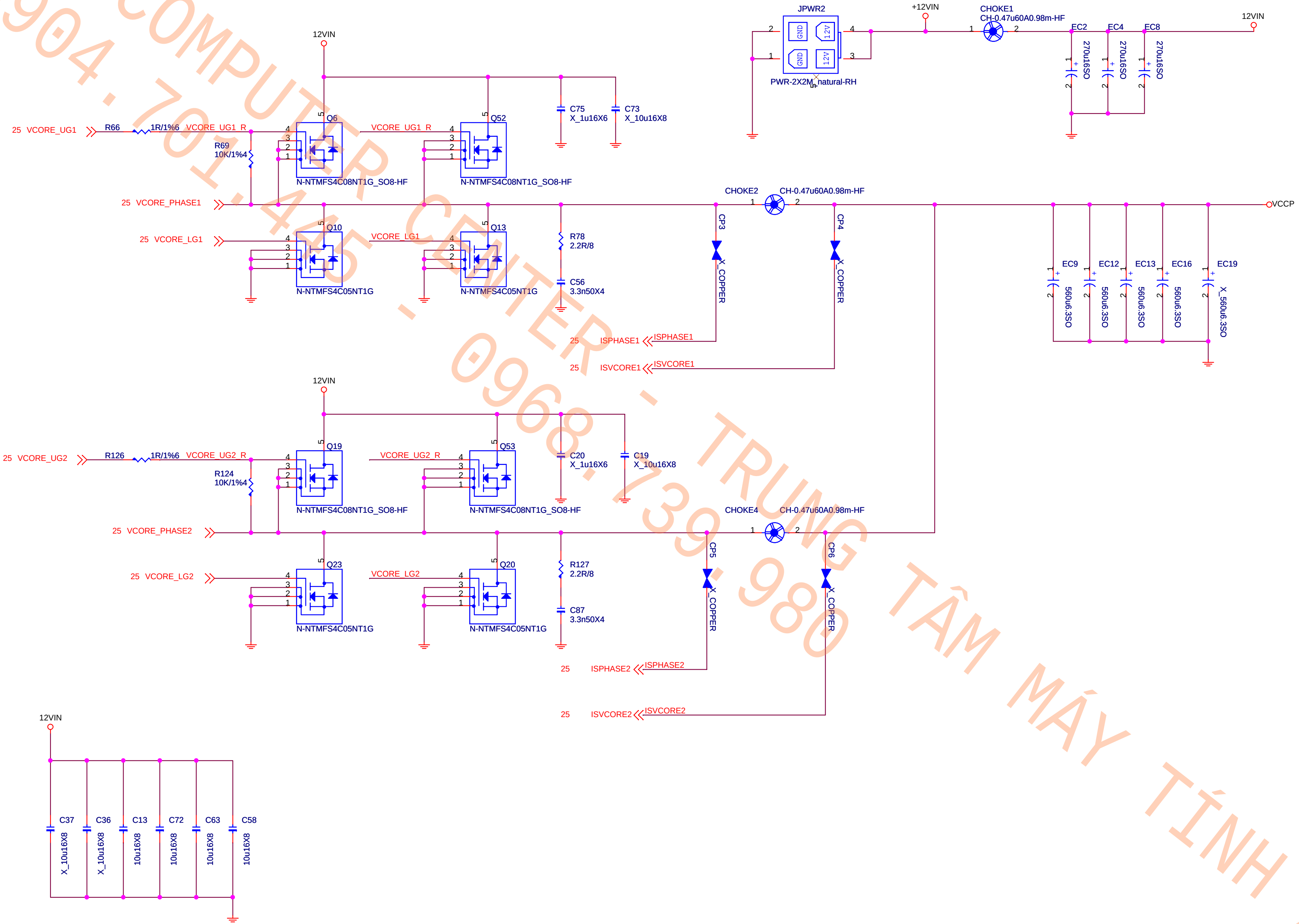

JPWR2
PWR-2X2M_natural-RH
GND
12V
+12VIN
CHOKE1
CH-0.47u60A0.98m-HF
12VIN
EC2
EC4
EC8
270u16SO
Q6
Q52
Q10
Q13
Q19
Q53
Q23
Q20
N-NTMFS4C08NT1G_SO8-HF
N-NTMFS4C05NT1G
25 VCORE_UG1
R66
1R/1%6
VCORE_UG1_R
R69
10K/1%4
C75
X_1u16X6
C73
X_10u16X8
25 VCORE_PHASE1
25 VCORE_LG1
VCORE_LG1
CHOKE2
CH-0.47u60A0.98m-HF
CP3
CP4
X_COPPER
R78
2.2R/8
C56
3.3n50X4
25 ISPHASE1
ISPHASE1
25 ISVCORE1
ISVCORE1
VCCP
EC9
EC12
EC13
EC16
EC19
560u6.3SO
X_560u6.3SO
25 VCORE_UG2
R126
1R/1%6
VCORE_UG2_R
R124
10K/1%4
C20
X_1u16X6
C19
X_10u16X8
25 VCORE_PHASE2
25 VCORE_LG2
VCORE_LG2
CHOKE4
CH-0.47u60A0.98m-HF
CP5
CP6
R127
2.2R/8
C87
3.3n50X4
25 ISPHASE2
ISPHASE2
25 ISVCORE2
ISVCORE2
12VIN
C37
X_10u16X8
C36
X_10u16X8
C13
10u16X8
C72
10u16X8
C63
10u16X8
C58
10u16X8

MSI

MICRO-STAR INT'L CO.,LTD

MS-7817

Size	Document Description	Rev
Custom	VCCP POWER	10

Date: Tuesday, December 04, 2012 Sheet 26 of 36

DDR Power:1.5V

DDR3_1.5V 4.2A+6A+0.5A+7.661=18.361A

4.2A FOR CPU

6A FOR 2DIMM

0.5A FOR DDR VTT

7.661A FOR PCH

OCP:66.7A

*OCP:16.447*1.5=24.6705A*

*OCPXRdson(Low side)=(40uA*Rocs(R122)-0.4V)*

Rocs(R122)=13.75K

2012.03.22 Modify Pull hi (47K)to ATX_5VSB

AV COMPUTER 0004.701.445 - CENTER 0968.739.980 - TRUNG TÂM MÁY TÍNH AV

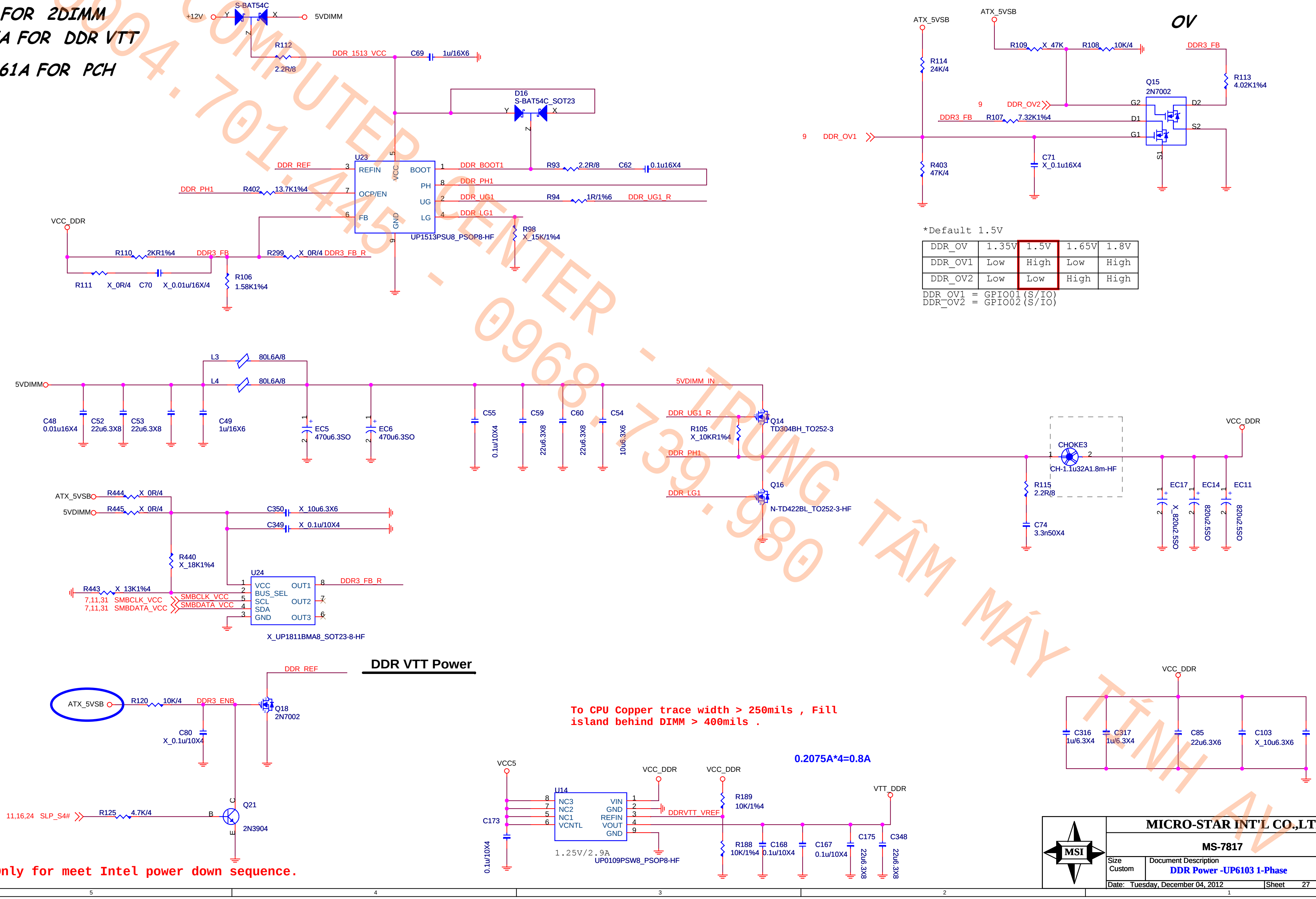
+12V
D3
S-BAT54C
Y
X
Z
5VDIMM
R112
2.2R/8
DDR_1513_VCC
C69
1u/16X6
D16
S-BAT54C_SOT23
U23
DDR_REF
REFIN
VCC
BOOT
DDR_BOOT1
R93
2.2R/8
C62
0.1u16X4
DDR_PH1
R402
13.7K1%4
OCP/EN
PH
UG
DDR_UG1
R94
1R/1%6
DDR_UG1_R
FB
LG
GND
DDR_LG1
R98
X_15K/1%4
UP1513PSU8_PSOP8-HF
VCC_DDR
R110
2KR1%4
DDR3_FB
R299
X_0R/4
DDR3_FB_R
R111
X_0R/4
C70
X_0.01u16X/4
R106
1.58K1%4
ATX_5VSB
R114
24K/4
R403
47K/4
R109
X_47K
R108
10K/4
OV
DDR3_FB
R113
4.02K1%4
Q15
2N7002
DDR_OV2
G2
D2
R107
7.32K1%4
D1
DDR_OV1
G1
S2
S1
C71
X_0.1u16X4
L3
80L6A/8
L4
80L6A/8
5VDIMM
C48
0.01u16X4
C52
22u6.3X8
C53
22u6.3X8
C49
1u/16X6
EC5
470u6.3SO
EC6
470u6.3SO
C55
0.1u/10X4
C59
22u6.3X8
C60
22u6.3X8
C54
10u6.3X6
5VDIMM_IN
DDR_UG1_R
Q14
TD304BH_TO252-3
R105
X_10KR1%4
DDR_PH1
DDR_LG1
Q16
N-TD422BL_TO252-3-HF
CHOKE3
CH-1.1u32A1.8m-HF
R115
2.2R/8
C74
3.3n50X4
VCC_DDR
EC17
X_820u2.5SO
EC14
820u2.5SO
EC11
820u2.5SO
ATX_5VSB
R444
X_0R/4
5VDIMM
R445
X_0R/4
C350
X_10u6.3X6
C349
X_0.1u/10X4
R440
X_18K1%4
U24
VCC
BUS_SEL
SCL
SDA
GND
OUT1
OUT2
OUT3
DDR3_FB_R
R443
X_13K1%4
7,11,31 SMBCLK_VCC
7,11,31 SMBDATA_VCC
X_UP1811BMA8_SOT23-8-HF
DDR VTT Power
DDR_REF
ATX_5VSB
R120
10K/4
DDR3_ENB
Q18
2N7002
C80
X_0.1u/10X4
Q21
2N3904
11,16,24 SLP_S4#
R125
4.7K/4
VCC5
C173
0.1u/10X4
U14
NC3
NC2
NC1
VCNTL
VIN
GND
REFIN
VOUT
GND
VCC_DDR
VCC_DDR
DDRVTT_VREF
R189
10K/1%4
R188
10K/1%4
C168
0.1u/10X4
C167
0.1u/10X4
C175
22u6.3X8
C348
22u6.3X8
VTT_DDR
1.25V/2.9A
UP0109PSW8_PSOP8-HF
VCC_DDR
C316
1u/6.3X4
C317
1u/6.3X4
C85
22u6.3X6
C103
X_10u6.3X6
C88
X_10u6.3X6

*Default 1.5V

DDR_OV	1.35V	1.5V	1.65V	1.8V
DDR_OV1	Low	High	Low	High
DDR_OV2	Low	Low	High	High

DDR_OV1 = GPIO01(S/IO)
DDR_OV2 = GPIO02(S/IO)

To CPU Copper trace width > 250mils , Fill island behind DIMM > 400mils .

0.2075A*4=0.8A

P.S. Only for meet Intel power down sequence.

MICRO-STAR INT'L CO.,LTD

MS-7817

Size	Document Description	Rev
Custom	DDR Power -UP6103 1-Phase	10

Date: Tuesday, December 04, 2012 Sheet 27 of 36

PCH Power:1.05V 5.747A

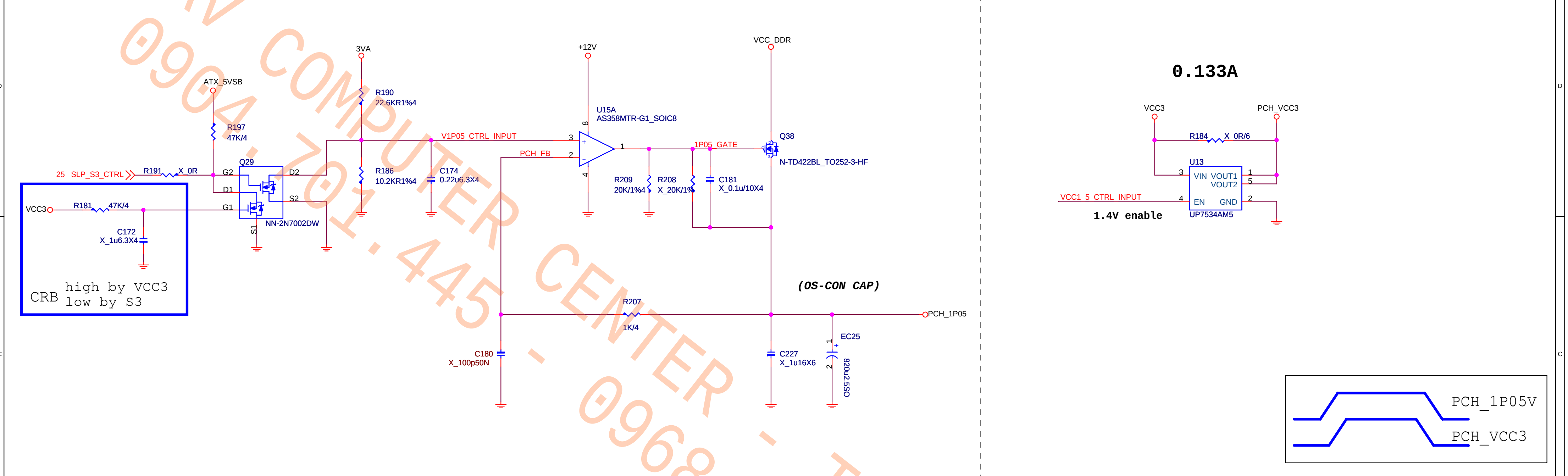
ATX_5VSB
R197
47K/4
25 SLP_S3_CTRL
R191
X_0R
G2
Q29
D2
D1
G1
S2
S1
NN-2N7002DW
VCC3
R181
47K/4
C172
X_1u6.3X4
CRB
high by VCC3
low by S3
3VA
R190
22.6KR1%4
R186
10.2KR1%4
V1P05_CTRL_INPUT
C174
0.22u6.3X4
PCH_FB
+12V
U15A
AS358MTR-G1_SOIC8
8
3
2
4
1
R209
20K/1%4
R208
X_20K/1%
C181
X_0.1u/10X4
1P05_GATE
VCC_DDR
Q38
N-TD422BL_TO252-3-HF
(OS-CON CAP)
R207
1K/4
PCH_1P05
C180
X_100p50N
C227
X_1u16X6
EC25
820u2.5SO
0.133A
VCC3
PCH_VCC3
R184
X_0R/6
U13
VIN
VOUT1
VOUT2
EN
GND
VCC1_5_CTRL_INPUT
1.4V enable
UP7534AM5
PCH_1P05V
PCH_VCC3

PCH Power:1.5V 0.183A

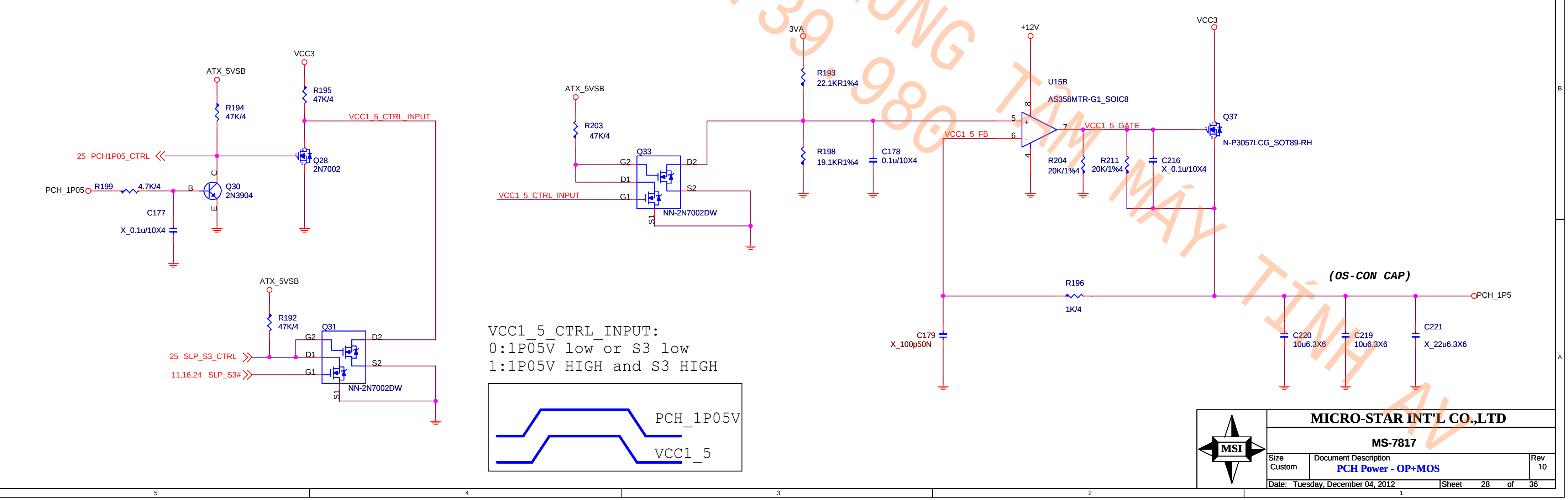
ATX_5VSB
R194
47K/4
VCC3
R195
47K/4
VCC1_5_CTRL_INPUT
25 PCH1P05_CTRL
Q28
2N7002
PCH_1P05
R199
4.7K/4
B
C
E
Q30
2N3904
C177
X_0.1u/10X4
ATX_5VSB
R192
47K/4
G2
Q31
D2
25 SLP_S3_CTRL
D1
G1
S2
11,16,24 SLP_S3#
S1
NN-2N7002DW
ATX_5VSB
R203
47K/4
Q33
G2
D2
D1
G1
S2
S1
NN-2N7002DW
VCC1_5_CTRL_INPUT
3VA
R193
22.1KR1%4
R198
19.1KR1%4
C178
0.1u/10X4
+12V
U15B
AS358MTR-G1_SOIC8
8
5
6
7
4
VCC1_5_FB
VCC1_5_GATE
R204
20K/1%4
R211
20K/1%4
C216
X_0.1u/10X4
VCC3
Q37
N-P3057LCG_SOT89-RH
(OS-CON CAP)
R196
1K/4
PCH_1P5
C179
X_100p50N
C220
10u6.3X6
C219
10u6.3X6
C221
X_22u6.3X6
PCH_1P05V
VCC1_5

VCC1_5_CTRL_INPUT:
0:1P05V low or S3 low
1:1P05V HIGH and S3 HIGH

MICRO-STAR INT'L CO.,LTD

MS-7817

Size	Document Description	Rev
Custom	PCH Power - OP+MOS	10

Date: Tuesday, December 04, 2012   Sheet 28 of 36

PCH ME Power:1.05V 0.670A

AV COMPUTER 0904.701.445 - 0968.739.980
CENTER - TRUNG TÂM MÁY TÍNH AV

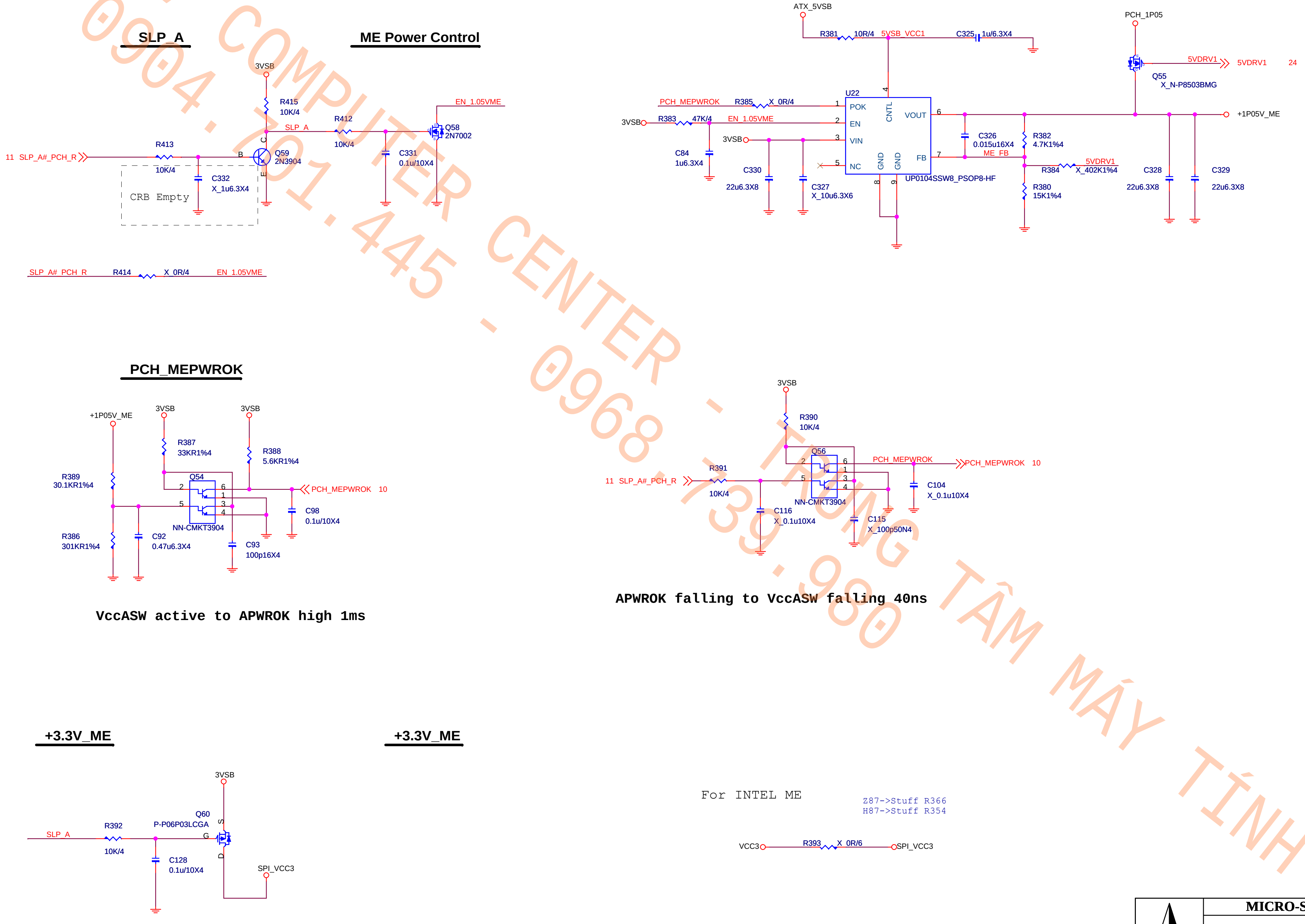
SLP_A
ME Power Control
3VSB
R415
10K/4
SLP_A
R412
10K/4
EN_1.05VME
Q58
2N7002
C331
0.1u/10X4
R413
10K/4
11 SLP_A#_PCH_R
B
C
E
Q59
2N3904
C332
X_1u6.3X4
CRB Empty
SLP_A#_PCH_R
R414
X_0R/4
EN_1.05VME
ATX_5VSB
R381
10R/4
5VSB_VCC1
C325
1u/6.3X4
PCH_1P05
Q55
X_N-P8503BMG
5VDRV1
5VDRV1
24
PCH_MEPWROK
R385
X_0R/4
3VSB
R383
47K/4
EN_1.05VME
U22
1 POK
2 EN
3 VIN
5 NC
4 CNTL
6 VOUT
7 FB
8 GND
9 GND
UP0104SSW8_PSOP8-HF
C84
1u6.3X4
3VSB
C330
22u6.3X8
C327
X_10u6.3X6
C326
0.015u16X4
ME_FB
R382
4.7K1%4
R384
X_402K1%4
5VDRV1
R380
15K1%4
C328
22u6.3X8
C329
22u6.3X8
+1P05V_ME
PCH_MEPWROK
+1P05V_ME
3VSB
3VSB
R387
33KR1%4
R388
5.6KR1%4
R389
30.1KR1%4
Q54
2
5
6
1
3
4
NN-CMKT3904
PCH_MEPWROK 10
C98
0.1u/10X4
R386
301KR1%4
C92
0.47u6.3X4
C93
100p16X4
3VSB
R390
10K/4
Q56
PCH_MEPWROK
PCH_MEPWROK 10
11 SLP_A#_PCH_R
R391
10K/4
2
5
6
1
3
4
NN-CMKT3904
C104
X_0.1u10X4
C116
X_0.1u10X4
C115
X_100p50N4
+3.3V_ME
+3.3V_ME
3VSB
Q60
P-P06P03LCGA
S
G
D
SLP_A
R392
10K/4
C128
0.1u/10X4
SPI_VCC3
VCC3
R393
X_0R/6
SPI_VCC3

VccASW active to APWROK high 1ms

APWROK falling to VccASW falling 40ns

For INTEL ME

Z87->Stuff R366
H87->Stuff R354

MICRO-STAR INT'L CO.,LTD

MS-7817

Size	Document Description	Rev
Custom	PCH Power - OP+MOS	10

Date: Tuesday, December 04, 2012 | Sheet 29 of 36

AV COMPUTER CENTER - TRUNG TÂM MÁY TÍNH AV
0904.760.445 - 0968.739.980

ATX POWER CONNECTOR

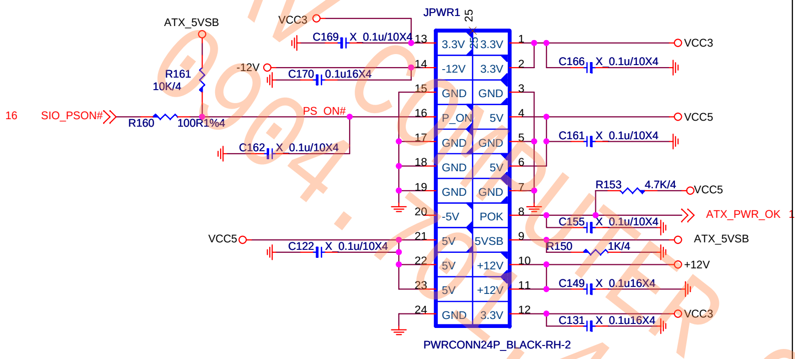
JPWR1
25
ATX_5VSB
VCC3
R161
10K/4
-12V
16 SIO_PSON#
R160 100R1%4
PS_ON#
C169 X_0.1u/10X4
C170 0.1u16X4
C162 X_0.1u/10X4
VCC5
C122 X_0.1u/10X4
3.3V 3.3V
-12V 3.3V
GND GND
P_ON 5V
GND GND
GND 5V
GND GND
-5V POK
5V 5VSB
5V +12V
5V +12V
GND 3.3V
C166 X_0.1u/10X4
C161 X_0.1u/10X4
R153 4.7K/4
C155 X_0.1u/10X4
R150 1K/4
C149 X_0.1u16X4
C131 X_0.1u16X4
VCC3
VCC5
VCC5
ATX_PWR_OK 16,24
ATX_5VSB
+12V
VCC3
PWRCONN24P_BLACK-RH-2

FRONT PANNEL

EMI

Speaker Pin Header

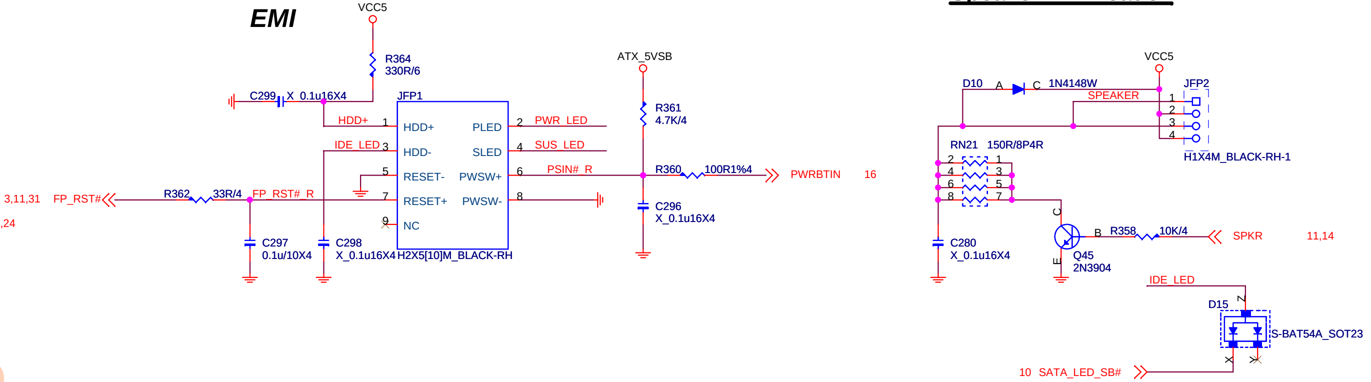
VCC5
R364 330R/6
C299 X_0.1u16X4
JFP1
HDD+
IDE_LED
HDD+ PLED
HDD- SLED
RESET- PWSW+
RESET+ PWSW-
NC
PWR_LED
SUS_LED
PSIN#_R
3,11,31 FP_RST#
R362 33R/4
FP_RST#_R
C297 0.1u/10X4
C298 X_0.1u16X4
H2X5[10]M_BLACK-RH
ATX_5VSB
R361 4.7K/4
R360 100R1%4
PWRBTIN 16
C296 X_0.1u16X4
D10 A C 1N4148W
VCC5
SPEAKER
JFP2
H1X4M_BLACK-RH-1
RN21 150R/8P4R
C280 X_0.1u16X4
Q45 2N3904
R358 10K/4
SPKR 11,14
IDE_LED
D15
S-BAT54A_SOT23
10 SATA_LED_SB#

LED (for NV5533)

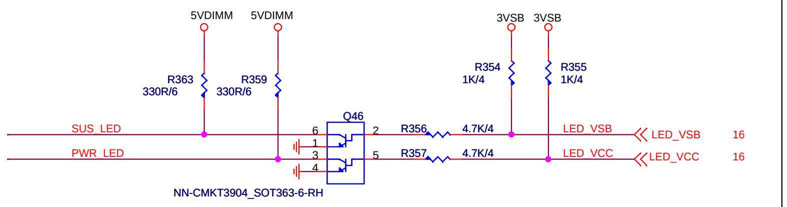
5VDIMM
5VDIMM
3VSB
3VSB
R363 330R/6
R359 330R/6
R354 1K/4
R355 1K/4
Q46
SUS_LED
PWR_LED
R356 4.7K/4
R357 4.7K/4
LED_VSB
LED_VCC
LED_VSB 16
LED_VCC 16
NN-CMKT3904_SOT363-6-RH

FAN-COUNTROL CIRCUIT

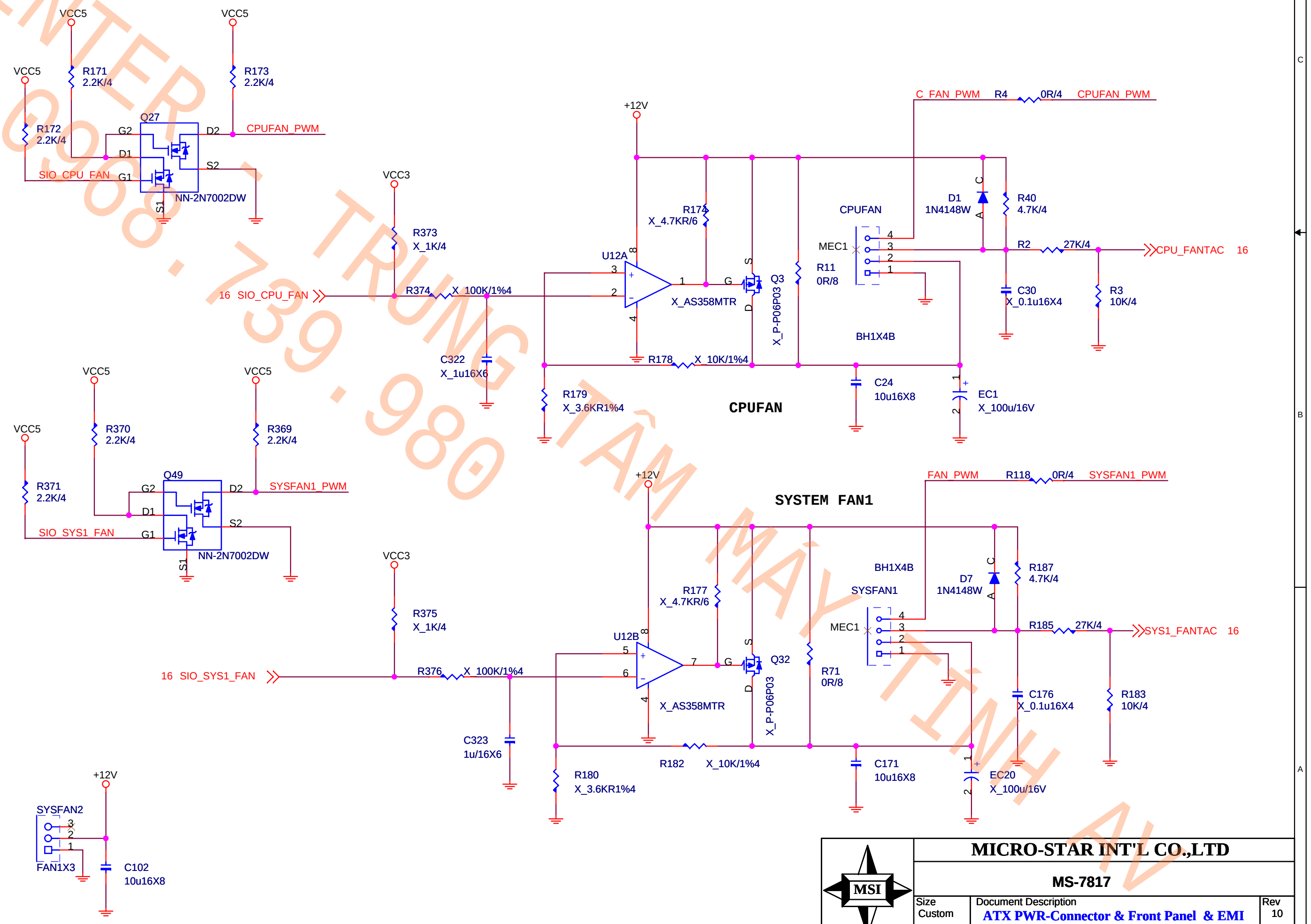
VCC5
VCC5
VCC5
R171 2.2K/4
R173 2.2K/4
R172 2.2K/4
Q27
G2 D2
D1 S2
G1 S1
CPUFAN_PWM
SIO_CPU_FAN
NN-2N7002DW
+12V
C_FAN_PWM R4 0R/4 CPUFAN_PWM
VCC3
R373 X_1K/4
R174 X_4.7KR/6
U12A
16 SIO_CPU_FAN
R374 X_100K/1%4
X_AS358MTR
Q3 X_P-P06P03
R11 0R/8
CPUFAN
MEC1
BH1X4B
D1 1N4148W
R40 4.7K/4
R2 27K/4
CPU_FANTAC 16
C30 X_0.1u16X4
R3 10K/4
C322 X_1u16X6
R178 X_10K/1%4
R179 X_3.6KR1%4
C24 10u16X8
EC1 X_100u/16V
CPUFAN
VCC5
VCC5
VCC5
R370 2.2K/4
R369 2.2K/4
R371 2.2K/4
Q49
SYSFAN1_PWM
SIO_SYS1_FAN
NN-2N7002DW
+12V
SYSTEM FAN1
FAN_PWM R118 0R/4 SYSFAN1_PWM
VCC3
R375 X_1K/4
R177 X_4.7KR/6
U12B
BH1X4B
SYSFAN1
MEC1
D7 1N4148W
R187 4.7K/4
R185 27K/4
SYS1_FANTAC 16
16 SIO_SYS1_FAN
R376 X_100K/1%4
X_AS358MTR
Q32 X_P-P06P03
R71 0R/8
C176 X_0.1u16X4
R183 10K/4
C323 1u/16X6
R180 X_3.6KR1%4
R182 X_10K/1%4
C171 10u16X8
EC20 X_100u/16V
+12V
SYSFAN2
FAN1X3
C102 10u16X8

TPM/JLPC

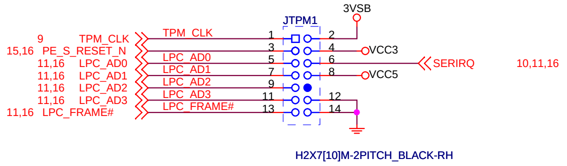
3VSB
JTPM1
9 TPM_CLK
15,16 PE_S_RESET_N
11,16 LPC_AD0
11,16 LPC_AD1
11,16 LPC_AD2
11,16 LPC_AD3
11,16 LPC_FRAME#
VCC3
VCC5
SERIRQ 10,11,16
H2X7[10]M-2PITCH_BLACK-RH

MICRO-STAR INT'L CO.,LTD

MS-7817

Size	Document Description	Rev
Custom	ATX PWR-Connector & Front Panel & EMI	10

Date: Tuesday, December 04, 2012 Sheet 30 of 36

Reserve debug port 5020

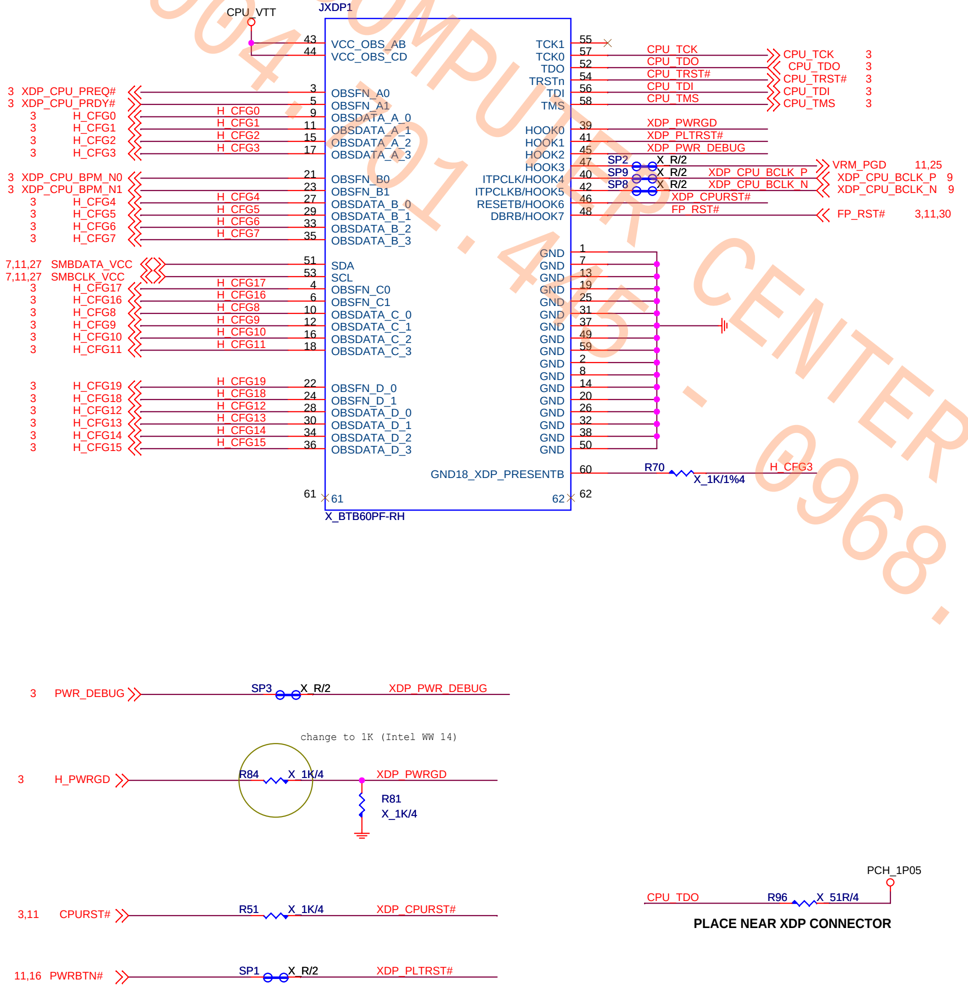
CPU_VTT
JXDP1
43 VCC_OBS_AB
44 VCC_OBS_CD
3 XDP_CPU_PREQ# 3 OBSFN_A0
3 XDP_CPU_PRDY# 5 OBSFN_A1
3 H_CFG0 9 OBSDATA_A_0
3 H_CFG1 11 OBSDATA_A_1
3 H_CFG2 15 OBSDATA_A_2
3 H_CFG3 17 OBSDATA_A_3
3 XDP_CPU_BPM_N0 21 OBSFN_B0
3 XDP_CPU_BPM_N1 23 OBSFN_B1
3 H_CFG4 27 OBSDATA_B_0
3 H_CFG5 29 OBSDATA_B_1
3 H_CFG6 33 OBSDATA_B_2
3 H_CFG7 35 OBSDATA_B_3
7,11,27 SMBDATA_VCC 51 SDA
7,11,27 SMBCLK_VCC 53 SCL
3 H_CFG17 4 OBSFN_C0
3 H_CFG16 6 OBSFN_C1
3 H_CFG8 10 OBSDATA_C_0
3 H_CFG9 12 OBSDATA_C_1
3 H_CFG10 16 OBSDATA_C_2
3 H_CFG11 18 OBSDATA_C_3
3 H_CFG19 22 OBSFN_D_0
3 H_CFG18 24 OBSFN_D_1
3 H_CFG12 28 OBSDATA_D_0
3 H_CFG13 30 OBSDATA_D_1
3 H_CFG14 34 OBSDATA_D_2
3 H_CFG15 36 OBSDATA_D_3
61 61
X_BTB60PF-RH
TCK1 55
TCK0 57 CPU_TCK CPU_TCK 3
TDO 52 CPU_TDO CPU_TDO 3
TRSTn 54 CPU_TRST# CPU_TRST# 3
TDI 56 CPU_TDI CPU_TDI 3
TMS 58 CPU_TMS CPU_TMS 3
HOOK0 39 XDP_PWRGD
HOOK1 41 XDP_PLTRST#
HOOK2 45 XDP_PWR_DEBUG
HOOK3 47 SP2 X_R/2 VRM_PGD 11,25
ITPCLK/HOOK4 40 SP9 X_R/2 XDP_CPU_BCLK_P XDP_CPU_BCLK_P 9
ITPCLKB/HOOK5 42 SP8 X_R/2 XDP_CPU_BCLK_N XDP_CPU_BCLK_N 9
RESETB/HOOK6 46 XDP_CPURST#
DBRB/HOOK7 48 FP_RST# FP_RST# 3,11,30
GND 1
GND 7
GND 13
GND 19
GND 25
GND 31
GND 37
GND 49
GND 59
GND 2
GND 8
GND 14
GND 20
GND 26
GND 32
GND 38
GND 50
GND18_XDP_PRESENTB 60 R70 X_1K/1%4 H_CFG3
62 62
3 PWR_DEBUG SP3 X_R/2 XDP_PWR_DEBUG
change to 1K (Intel WW 14)
3 H_PWRGD R84 X_1K/4 XDP_PWRGD
R81
X_1K/4
3,11 CPURST# R51 X_1K/4 XDP_CPURST#
11,16 PWRBTN# SP1 X_R/2 XDP_PLTRST#
PCH_1P05
CPU_TDO R96 X_51R/4

PLACE NEAR XDP CONNECTOR

AV COMPUTER 0904.401.445 - CENTER - 0968.739.980 TRUNG TÂM MÁY TÍNH AV

MICRO-STAR INT'L CO.,LTD		
MS-7817		
Size Custom	Document Description **XDP CPU & PCH**	Rev 10
Date: Tuesday, December 04, 2012	Sheet 31 of 36	

AV COMPUTER 0904.701.445 - 0968.739.980 TRUNG TÂM MÁY TÍNH AV

Optical Fiducial Marks-120

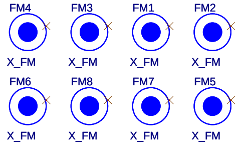
FM4
FM3
FM1
FM2
X_FM
X_FM
X_FM
X_FM
FM6
FM8
FM7
FM5
X_FM
X_FM
X_FM
X_FM

LABEL1
BAT-BCR2032P-RH
BAT1_X1
BAT-BCR2032P-RH
PCB1
7817_10
CPU_H1
CPU
鐵座
CPU_H1

Simulation

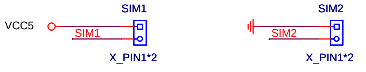
VCC5
SIM1
SIM1
X_PIN1*2
SIM2
SIM2
X_PIN1*2

Mounting Holes

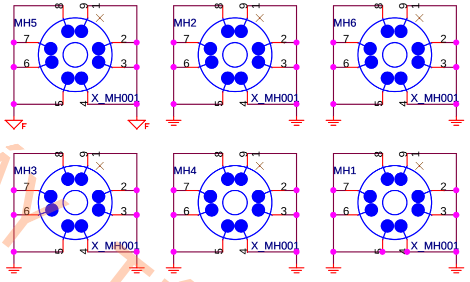
MH5
X_MH001
MH2
X_MH001
MH6
X_MH001
MH3
X_MH001
MH4
X_MH001
MH1
X_MH001

PCH XDP PWRGD/RESET

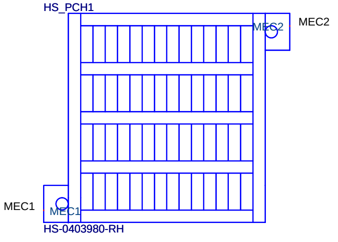
HS_PCH1
MEC2
MEC2
MEC1
MEC1
HS-0403980-RH

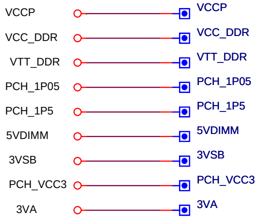
VCCP
VCCP
VCC_DDR
VCC_DDR
VTT_DDR
VTT_DDR
PCH_1P05
PCH_1P05
PCH_1P5
PCH_1P5
5VDIMM
5VDIMM
3VSB
3VSB
PCH_VCC3
PCH_VCC3
3VA
3VA

MSI	MICRO-STAR INT'L CO.,LTD		
	MS-7817		
	Size Custom	Document Description **Manual Parts**	Rev 10
	Date: Tuesday, December 04, 2012	Sheet 32 of 36	