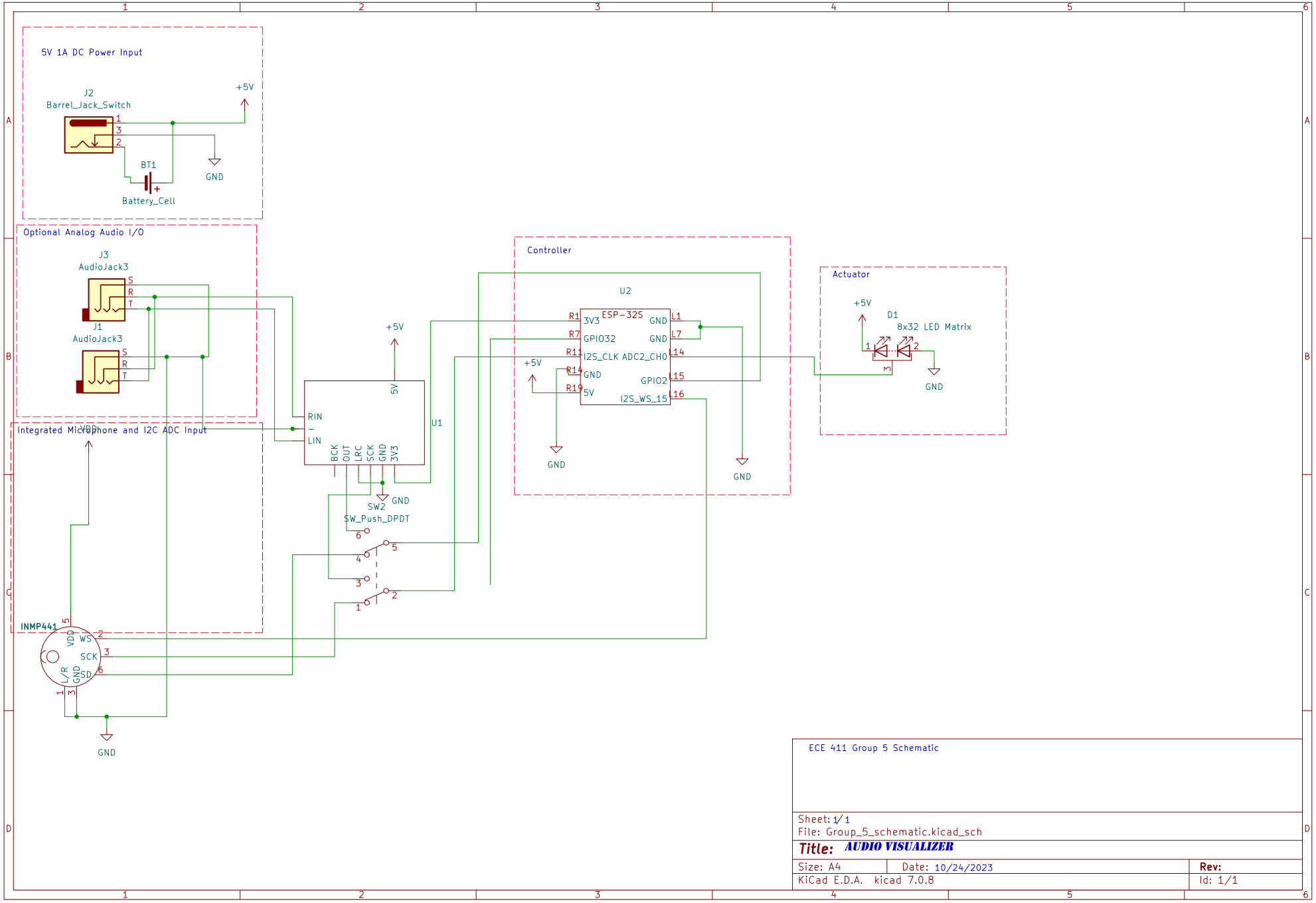


ECE 411 Group 5 Schematic

Sheet: 1/1
File: Group_5_schematic.kicad_sch

**Title:** AUDIO VISUALIZER

| | | |
|---|---|---|
| Size: A4 | Date: 10/24/2023 | Rev: |
| KiCad E.D.A. kicad 7.0.8 | | Id: 1/1 |

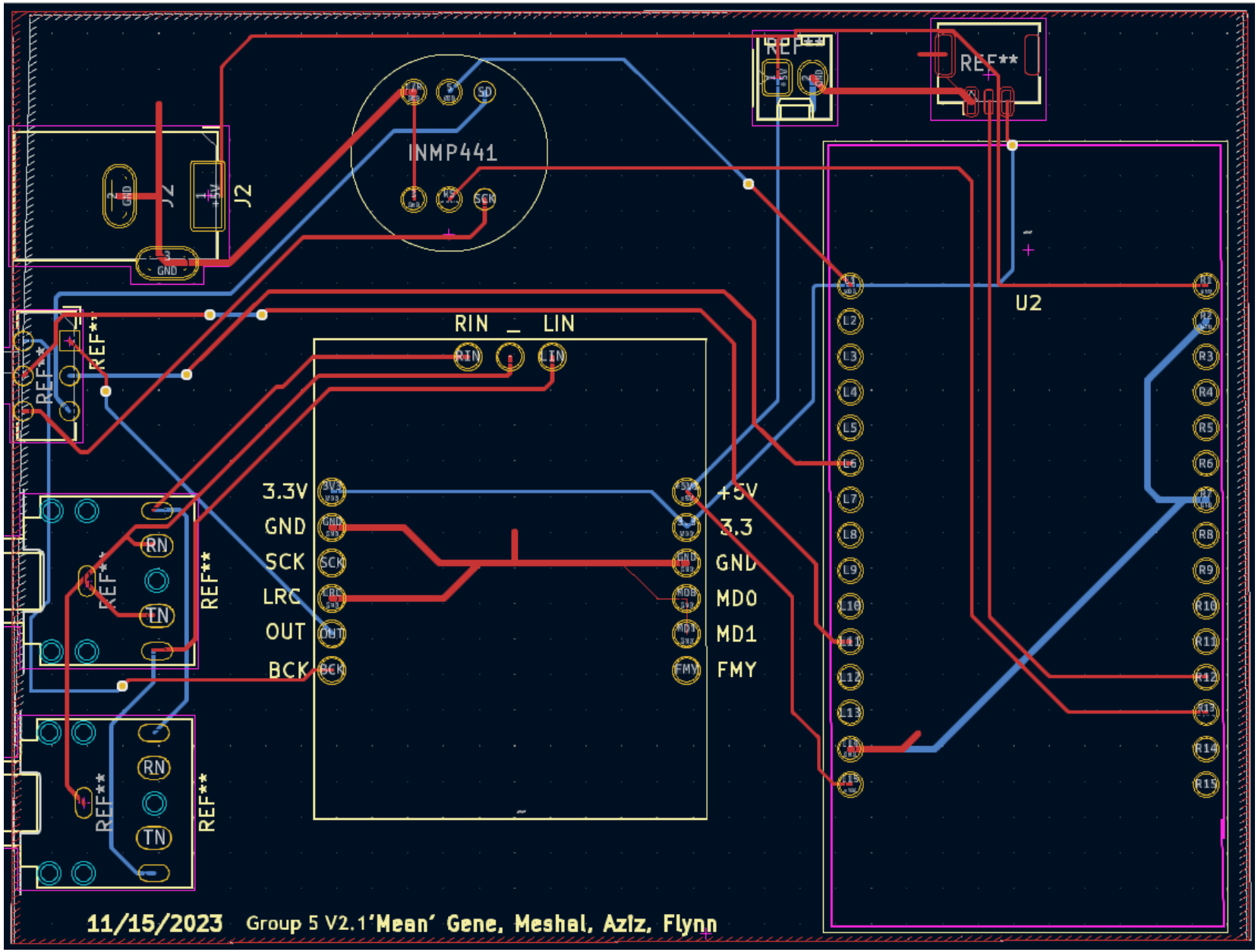
INMP441
J2
U2
RIN
LIN
3.3V
GND
SCK
LRC
OUT
BCK
+5V
3.3
GND
MD0
MD1
FMY
RN
TN
REF**
11/15/2023 Group 5 V2.1 'Mean' Gene, Meshal, Aziz, Flynn