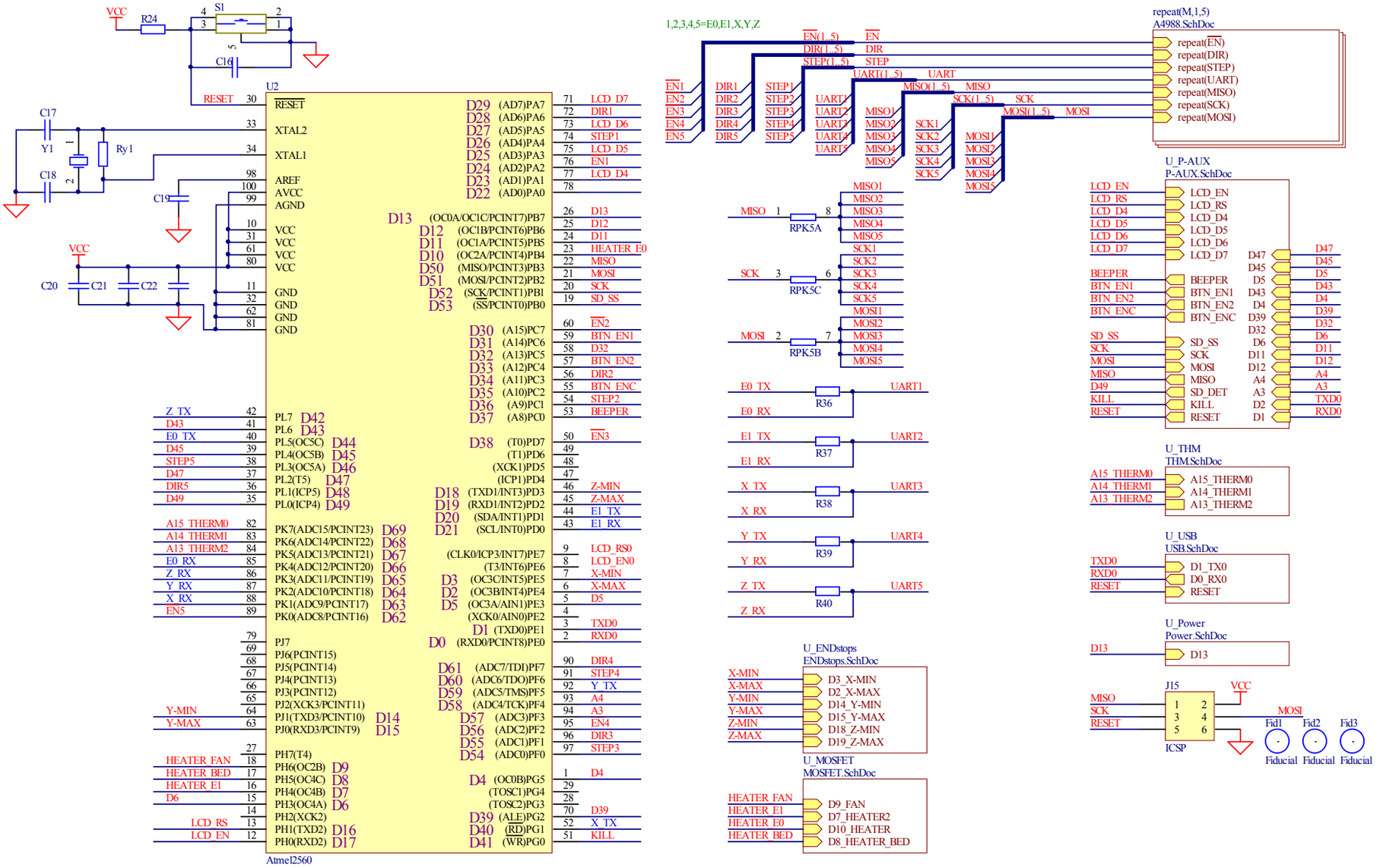
VCC
R24
S1
C16
RESET
U2
C17
Y1
Ry1
C18
C19
C20
C21
C22
XTAL2
XTAL1
AREF
AVCC
AGND
VCC
GND
PL7 D42
PL6 D43
PL5(OC5C) D44
PL4(OC5B) D45
PL3(OC5A) D46
PL2(T5) D47
PL1(ICP5) D48
PL0(ICP4) D49
PK7(ADC15/PCINT23) D69
PK6(ADC14/PCINT22) D68
PK5(ADC13/PCINT21) D67
PK4(ADC12/PCINT20) D66
PK3(ADC11/PCINT19) D65
PK2(ADC10/PCINT18) D64
PK1(ADC9/PCINT17) D63
PK0(ADC8/PCINT16) D62
PJ7
PJ6(PCINT15)
PJ5(PCINT14)
PJ4(PCINT13)
PJ3(PCINT12)
PJ2(XCK3/PCINT11)
PJ1(TXD3/PCINT10) D14
PJ0(RXD3/PCINT9) D15
PH7(T4)
PH6(OC2B) D9
PH5(OC4C) D8
PH4(OC4B) D7
PH3(OC4A) D6
PH2(XCK2)
PH1(TXD2) D16
PH0(RXD2) D17
D29 (AD7)PA7
D28 (AD6)PA6
D27 (AD5)PA5
D26 (AD4)PA4
D25 (AD3)PA3
D24 (AD2)PA2
D23 (AD1)PA1
D22 (AD0)PA0
D13 (OC0A/OC1C/PCINT7)PB7
D12 (OC1B/PCINT6)PB6
D11 (OC1A/PCINT5)PB5
D10 (OC2A/PCINT4)PB4
D50 (MISO/PCINT3)PB3
D51 (MOSI/PCINT2)PB2
D52 (SCK/PCINT1)PB1
D53 (SS/PCINT0)PB0
D30 (A15)PC7
D31 (A14)PC6
D32 (A13)PC5
D33 (A12)PC4
D34 (A11)PC3
D35 (A10)PC2
D36 (A9)PC1
D37 (A8)PC0
D38 (T0)PD7
(T1)PD6
(XCK1)PD5
(ICP1)PD4
D18 (TXD1/INT3)PD3
D19 (RXD1/INT2)PD2
D20 (SDA/INT1)PD1
D21 (SCL/INT0)PD0
(CLK0/ICP3/INT7)PE7
(T3/INT6)PE6
D3 (OC3C/INT5)PE5
D2 (OC3B/INT4)PE4
D5 (OC3A/AIN1)PE3
(XCK0/AIN0)PE2
D1 (TXD0)PE1
D0 (RXD0/PCINT8)PE0
D61 (ADC7/TDI)PF7
D60 (ADC6/TDO)PF6
D59 (ADC5/TMS)PF5
D58 (ADC4/TCK)PF4
D57 (ADC3)PF3
D56 (ADC2)PF2
D55 (ADC1)PF1
D54 (ADC0)PF0
D4 (OC0B)PG5
(TOSC1)PG4
(TOSC2)PG3
D39 (ALE)PG2
D40 (RD)PG1
D41 (WR)PG0
Atmel2560
Z_TX
D43
E0_TX
D45
STEP5
D47
DIR5
D49
A15_THERM0
A14_THERM1
A13_THERM2
E0_RX
Z_RX
Y_RX
X_RX
EN5
Y-MIN
Y-MAX
HEATER_FAN
HEATER_BED
HEATER_E1
D6
LCD_RS
LCD_EN
LCD_D7
DIR1
STEP1
LCD_D5
EN1
LCD_D4
D13
D12
D11
HEATER_E0
MISO
MOSI
SCK
SD_SS
EN2
BTN_EN1
D32
BTN_EN2
DIR2
BTN_ENC
STEP2
BEEPER
EN3
Z-MIN
Z-MAX
E1_TX
E1_RX
LCD_RS0
LCD_EN0
X-MIN
X-MAX
D5
TXD0
RXD0
DIR4
STEP4
Y_TX
A4
A3
EN4
DIR3
STEP3
D4
D39
X_TX
KILL
1,2,3,4,5=E0,E1,X,Y,Z
EN(1..5)
DIR(1..5)
STEP(1..5)
UART(1..5)
MISO(1..5)
SCK(1..5)
MOSI(1..5)
EN
DIR
STEP
UART
MISO
SCK
MOSI
repeat(M,1,5)
A4988.SchDoc
repeat(EN)
repeat(DIR)
repeat(STEP)
repeat(UART)
repeat(MISO)
repeat(SCK)
repeat(MOSI)
RPK5A
RPK5C
RPK5B
R36
R37
R38
R39
R40
UART1
UART2
UART3
UART4
UART5
U_P-AUX
P-AUX.SchDoc
BEEPER
BTN_EN1
BTN_EN2
BTN_ENC
SD_DET
KILL
U_THM
THM.SchDoc
U_USB
USB.SchDoc
D1_TX0
D0_RX0
U_Power
Power.SchDoc
J15
ICSP
Fid1
Fid2
Fid3
Fiducial
U_ENDstops
ENDstops.SchDoc
D3_X-MIN
D2_X-MAX
D14_Y-MIN
D15_Y-MAX
D18_Z-MIN
D19_Z-MAX
U_MOSFET
MOSFET.SchDoc
D9_FAN
D7_HEATER2
D10_HEATER
D8_HEATER_BED

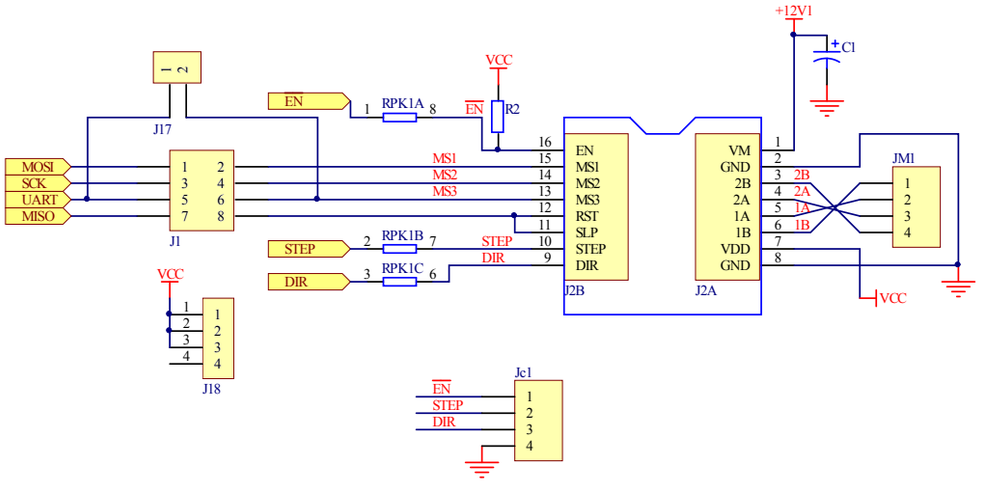
+12V1
C1
VCC
R2
EN
RPK1A
J17
MOSI
SCK
UART
MISO
J1
MS1
MS2
MS3
STEP
DIR
RPK1B
RPK1C
EN
MS1
MS2
MS3
RST
SLP
STEP
DIR
J2B
VM
GND
2B
2A
1A
1B
VDD
GND
J2A
JM1
VCC
J18
Jc1

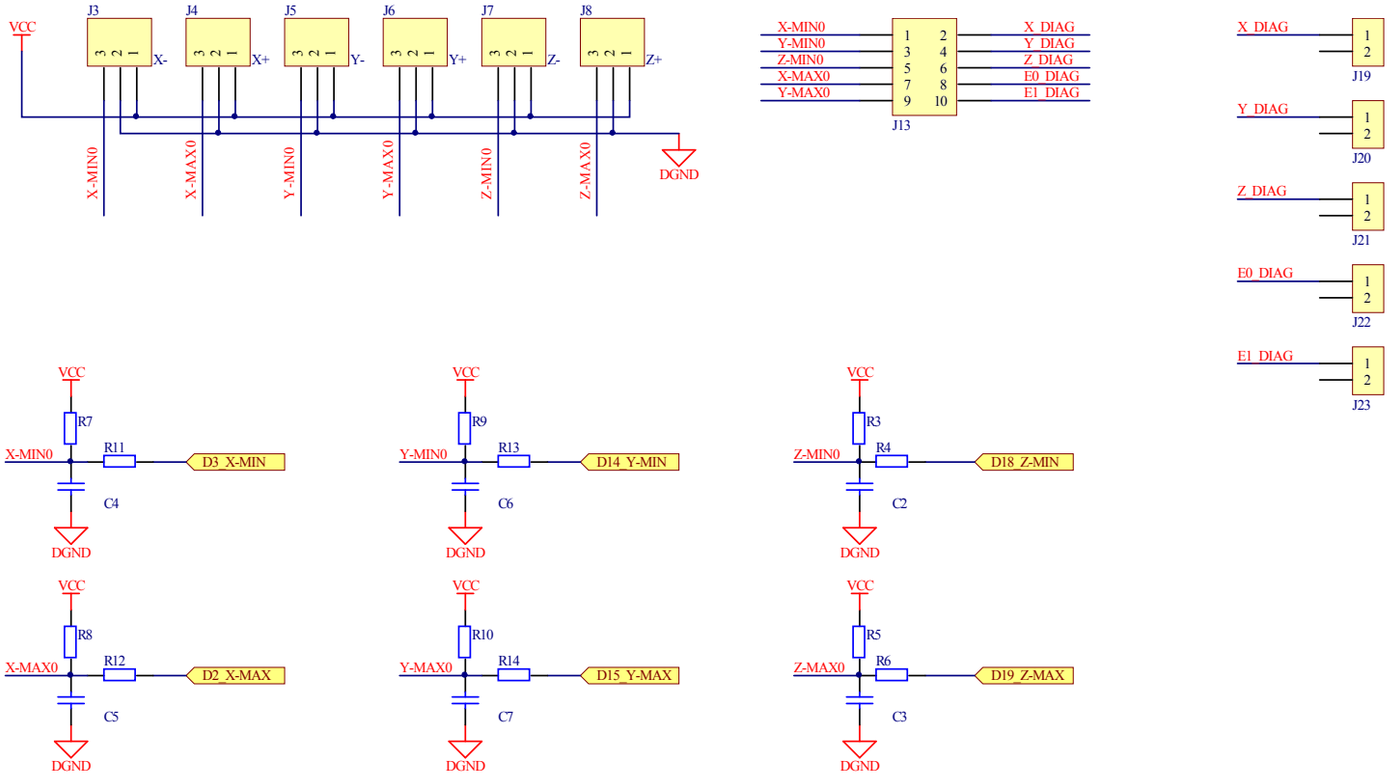
VCC
J3
J4
J5
J6
J7
J8
X-
X+
Y-
Y+
Z-
Z+
X-MIN0
X-MAX0
Y-MIN0
Y-MAX0
Z-MIN0
Z-MAX0
DGND
J13
X_DIAG
Y_DIAG
Z_DIAG
E0_DIAG
E1_DIAG
J19
J20
J21
J22
J23
R7
R11
C4
D3_X-MIN
R9
R13
C6
D14_Y-MIN
R3
R4
C2
D18_Z-MIN
R8
R12
C5
D2_X-MAX
R10
R14
C7
D15_Y-MAX
R5
R6
C3
D19_Z-MAX

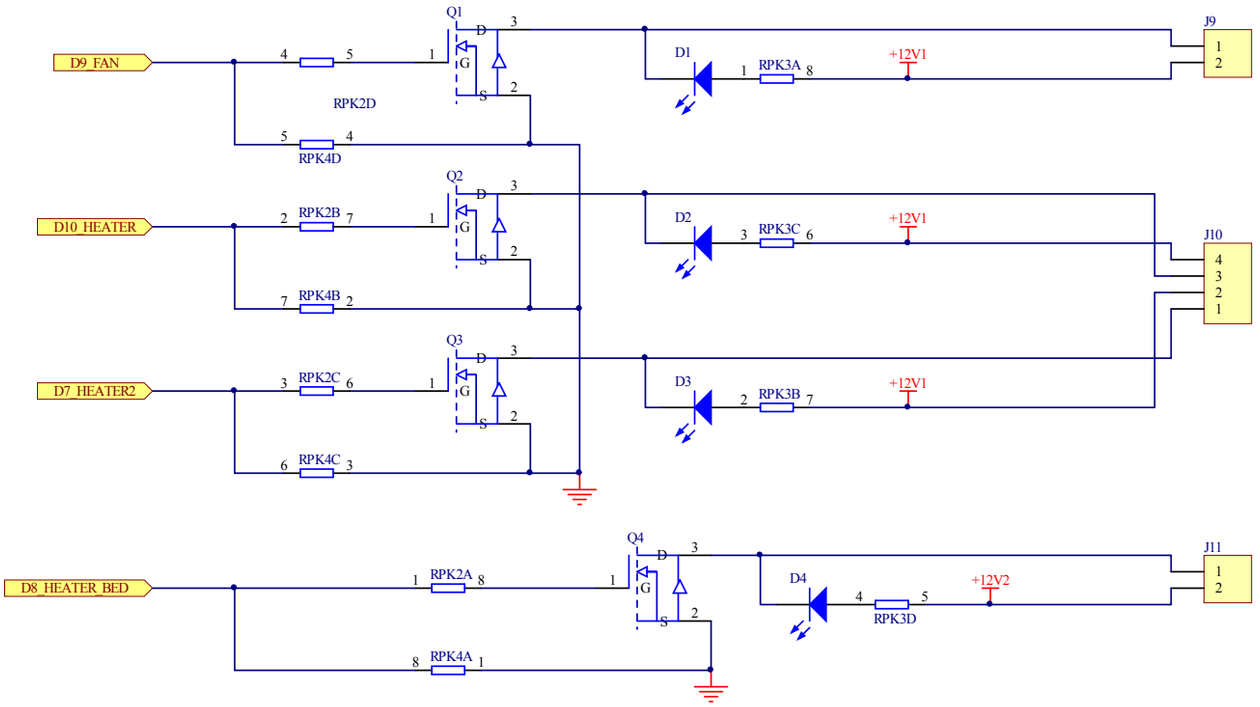
D9_FAN
D10_HEATER
D7_HEATER2
D8_HEATER_BED
Q1
Q2
Q3
Q4
D
G
S
RPK2D
RPK4D
RPK2B
RPK4B
RPK2C
RPK4C
RPK2A
RPK4A
D1
D2
D3
D4
RPK3A
RPK3C
RPK3B
RPK3D
+12V1
+12V2
J9
J10
J11

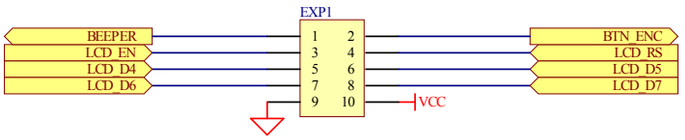
EXP1
BEEPER
LCD_EN
LCD_D4
LCD_D6
BTN_ENC
LCD_RS
LCD_D5
LCD_D7
VCC

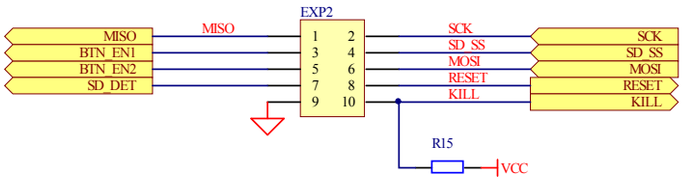
EXP2
MISO
BTN_EN1
BTN_EN2
SD_DET
MISO
SCK
SD_SS
MOSI
RESET
KILL
SCK
SD_SS
MOSI
RESET
KILL
R15
VCC

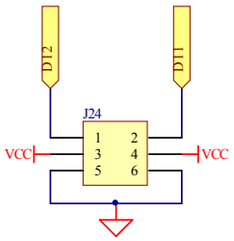
D12
D11
J24
VCC
VCC

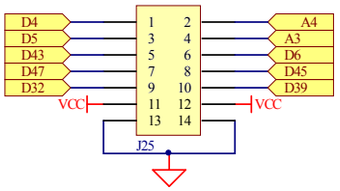
D4
D5
D43
D47
D32
A4
A3
D6
D45
D39
VCC
VCC
J25

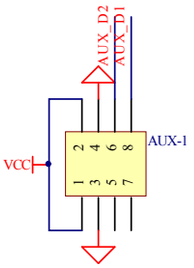
AUX_D2
AUX_D1
AUX-1
VCC

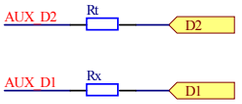
AUX_D2
Rt
D2
AUX_D1
Rx
D1

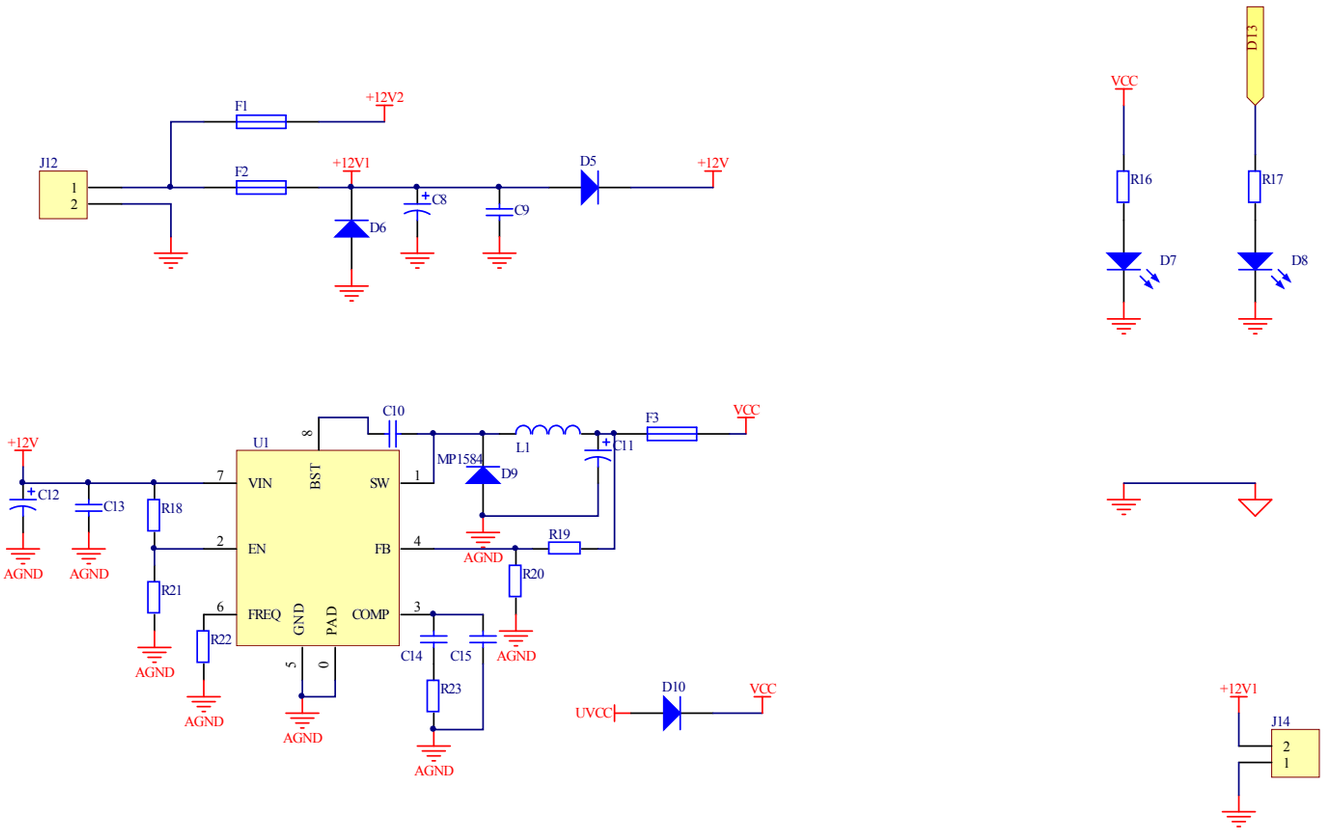
J12
1
2
F1
F2
+12V2
+12V1
D6
C8
C9
D5
+12V
VCC
R16
D7
D13
R17
D8
+12V
C12
C13
AGND
R18
R21
R22
U1
VIN
EN
FREQ
BST
GND
PAD
SW
FB
COMP
C10
MP1584
D9
L1
C11
F3
R19
R20
C14
C15
R23
UVCC
D10
J14
2
1

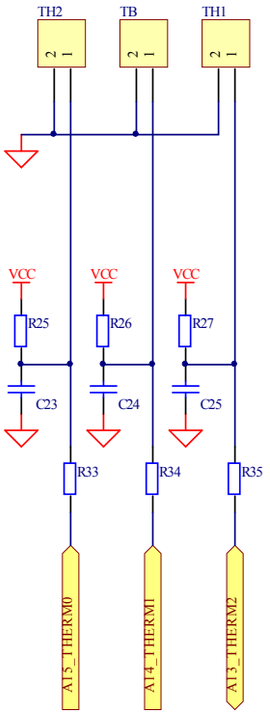
TH2
TB
TH1
2
1
VCC
R25
R26
R27
C23
C24
C25
R33
R34
R35
A15_THERM0
A14_THERM1
A13_THERM2

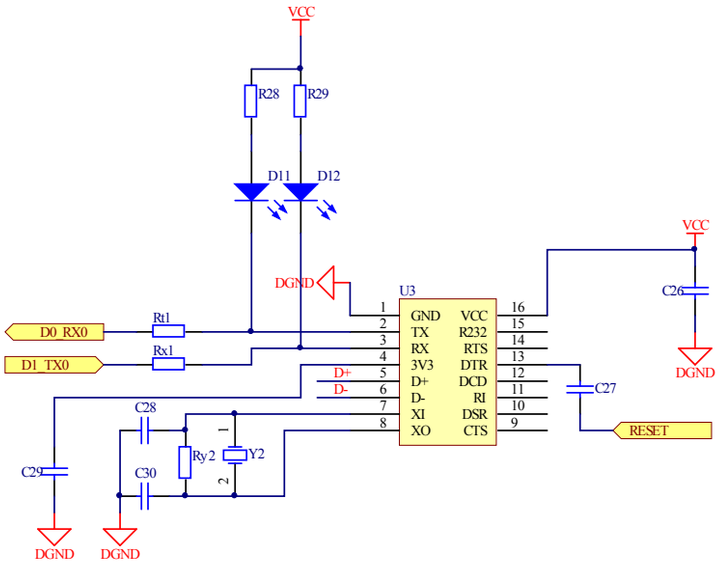
VCC
R28
R29
D11
D12
DGND
U3
GND
TX
RX
3V3
D+
D-
XI
XO
VCC
R232
RTS
DTR
DCD
RI
DSR
CTS
1
2
3
4
5
6
7
8
16
15
14
13
12
11
10
9
D0_RX0
D1_TX0
Rt1
Rx1
D+
D-
C26
C27
RESET
C28
C29
C30
Ry2
Y2
DGND
DGND
DGND

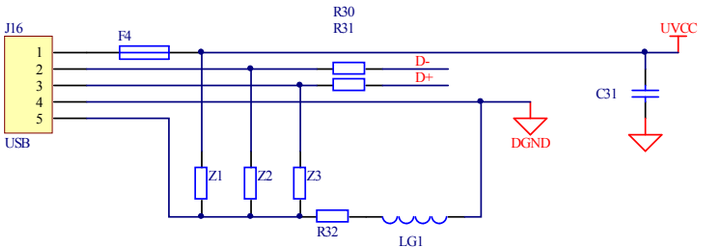
J16
1
2
3
4
5
USB
F4
R30
R31
D-
D+
UVCC
C31
DGND
Z1
Z2
Z3
R32
LG1