Introduction

Masta®
PRECISION HOUSINGS

Roots of MASTA date back to 1946 when the founder and visionary technocrat Mr. POPATLAL PATEL started the company with limited resources and began the legacy that shaped up in the renowned BEARING HOUSING manufacturing unit of to day which is well equipped with all in-house facilities of production are presently accredited with ISO 9001-2008 CERTIFICATION through TUV South Asia Pvt. Ltd.

'MASTA' is a TRUSTED name for its products of BEARING HOUSINGS (ALSO KNOWN AS PLUMMER BLOCKS/ BEARING PEDESTALS) which are being used to protect the bearings in the machinery installations and equipments.

MASTA bearing housings are normally made of CAST IRON castings. Same can be supplied in

- Cast Steel
- S.G.Iron / Ductile Iron
- S.S.Materials also on specific requirements.

The bearing housings are suitable for GREASE LUBRICATION or OIL LUBRICATION.

MASTA PLUMMER BLOCKS are available in all sizes starting from 20 mm to 500 mm shaft diameter in various series such as **'S' ,'SN', 'SNA', 'SNH' 'MNL' , 'SD', 'SOFN', 'MONL', 'LOE', 'SDGS', 'THDS', 'BND', 'SDJS', 'PDN', 'TVN', 722500 (FLANGED BEARING HOUSINGS**) etc.

Masta manufactures TAILOR MADE BEARING HOUSINGS, as per specific drawings or design. Any casting components other than Bearing Housings are also supplied as per drawings and specifications. We also supply bearing housings with babbit metal / bearing metal.

We, at MASTA:- with the commitment to the values, ethical business conduct, aspiring for EXCELLENCE in QUALITY through Technological up gradation, Adoption of INNOVATIONS and CONTINUAL IMPROVEMENT, thereby Enhance the CUSTOMER SATISFACTION.

Robust quality system backed by highly trained, experienced and skilled personnel ensure consistent quality. Meticulously built and advanced material testing and inspection techniques have made MASTA products way ahead of its competitor's products. To step in with the customers specific requirements, our EFFICIENT PRODUCTION TEAM have developed superior and DIFFERENTIATED products also.

State- of- art manufacturing facilities such as pattern shop, foundry, machine shop, paint shop all under one roof is established in unmatched infrastructureof 70,000 Sq. Ft. area.

We are equipped with:-

FOUNDRY

- 1200 Kgs x 450 KW INDUCTION FURNACE.
- 150 Kgs x 100 KW INDUCTION FURNACE
- 2 M.T. Heat Treatment Furnace.
- Spectrometer for online Chemical analysis.
- Hardness Testing equipment.
- MPI testing device.
- Pneumatic Moulding Mc.

MACHINE SHOP

- CNC Boring Machine
- VMC Machines
- Turning Centre
- Lathe Machines
- Milling Machines
- Drill Machines
- Boring Machines

Bearing Series	Plummer Blocks Designation For Material of Construction			Refer Catalogue		Standard Shaft Seals Available					Special Seals		
											Taconite Seals		Seal For Oil Lubrication
	Cast Iron	Cast Steel	S. G. Iron	Page No.	Felt Strips	Felt Collar	V-Ring Seal	Double Lip Seal	Four Lip Seal	Labyrinth Seal	Axial Seals	Radial Seals	
1200K,2200K,	SN 500	SSN 500	SND 500	17	FS	-	-	-	-	-	-	-	-
22200CCK,	SNA 500	SSNA 500	SSNAD 500	28	-	TC	TA	TG	TL	TS	ND	NC	TU
23200CCK	SNH 500	SSNH 500	SSNHD 500	34	-	TC	TA	TG	TL	TS	ND	NC	TU
	MNL 500	SMNL 500	SMNLD 500	42	-	TC	TA	TG	TL	TS	ND	NC	TU
	SAF 500	SAFS 500	SAFD 500	76	-	-	-	-	-	LER	TER	-	-
	SDAF 500	SDAFS 500	SDAF 500 D	90	-	-	-	-	-	-	-	-	-
1300K,2300K,	SN 600	SSN 600	SND 600	19	FS	TC	TA	TG	TL	-	-	-	-
22300CCK,	SNA 600	SSNA 600	SSNAD 600	28	FS	TC	TA	TG	TL				
21300CCK	SNH 600	SSNH 600	SNHD 600	34	FS	TC	TA	TG	TL				
	MNL 600	SMNL 600	MNLD 600	42									
	SAF 600	SAFS 600	SAFD 600	79						LER	TER		
	SDAF 600	SDAFS 600	SDAFS 600D	91					LER	TER			
23100 CCK	MNL 3100	SMNL 3100	SMNLD 3100	50	-	-	-	-	TS	TNF	-	TUR	
	SD 3100	SSD 3100	SDD 3100	68	-	-	-	-	-	TS	TNF	-	TURU
23000 CCK	MNL 3000	SMNL 3000	SMNLD 3000	50	-	-	-	-	TS	TNF	-	TURU	
	SD 3000	SSD 3000	SDD 3000	70	-	-	-	-	-	TS	TNF	-	TURU
	SD 3300	SSD 3300	SDD 3300	66	-	-	-	-	-	TS	TNF	-	TURU
23200 CCK	SD 3200	SSD 3200	SDD 3200	-	-	-	-	-	-	TS	-	-	TURU
22200 CCK	SD 500	SSD 500	SDD 500	71	FS	-	-	-	-	TS	-	-	TURU
22300 CCK	SD 600	SSD 600	SDD 600	72	FS	-	-	-	-	TS	-	-	TURU

Plummer Blocks Suitable For Bearing With Adapter Sleeves
SOFN, MONL, LOE, THD, SBD, BND, SPA Series

Masta®
PRECISION HOUSINGS

Bearing Series	Plummer Blocks Designation For Material of Construction			Refer Catalogue
	Cast Iron	Cast Steel	S. G. Iron	Page No.
22200 CCK	SOFN 500	SOFNS 500	SOFND 500	98
	MONL 500	MONLS 500	MONLD 500	104
	LOE 500	LOE 500	LOE 500	110
22300 CCK	SOFN 600	SOFNS 600	SOFND 600	98
	MONL 600	MONLS 600	MONLD 600	-
	LOE 600	LOE 600	LOE 600	110
22200 CCK	THDC 2200	THDS 2200	THDD 2200	-
	SBDC 2200	SBDS 2200	SBDD 2200	-
	BND 2200	BND 2200	BND 2200	-
	SPA 2200	SPA 2200	SPA 2200	-
23000 CCK	THDC 3000	THDS 3000	THDD 3000	-
	SBDC 3000	SBDS 3000	SBDD 3000	-
	BND 3000	BND 3000	BND 3000	-
	SPA 3000	SPA 3000	SPA 3000	-
23100 CCK	THDC 3100	THDS 3100	THDD 3100	-
	SBDC 3100	SBDS 3100	SBDD 3100	-
	BND 3100	BND 3100	BND 3100	-
	SPA 3100	SPA 3100	SPA 3100	-
23200 CCK	THDC 3200	THDS 3200	THDD 3200	-
	SBDC 3200	SBDS 3200	SBDD 3200	-
	BND 3200	BND 3200	BND 3200	-
	SPA 3200	SPA 3200	SPA 3200	-

Masta®
PRECISION HOUSINGS

Plummer Blocks Suitable For Bearing With Adapter Sleeves SN30, SN31, SNH30, SNH31, MNL30, MNL31, SDJ, SDG, 44300, 44400 Series

Housing Series	Plummer Blocks Designation For Material of Construction			Refer Catalogue
	Cast Iron	Cast Steel	S. G. Iron	Page No.
23000CCK	SN 3000	SSN 3000	SND 3000	25
	SNH 3000	SSNH 3000	SSNHD 3000	-
	MNL 3000	SMNL 3000	SMNLD 3000	49
23100 CCK	SN 3100	SSN 3100	SND 3100	25
	SNH 3100	SSNH 3100	SSNHD 3100	-
	MNL 3100	SMNL 3100	SMNLD 3100	49
23100 CCK	SDJC 3100	SDJS 3100	SDJD 3100	-
		443000		-
		444000		-
23000 CCK	SDGC 3000	SDGS 3000	SDGD 3000	-
23100 CCK	SDGC 3100	SDGS 3100	SDGD 3100	-
23200 CCK	SDGC 3200	SDGS 3200	SDGD 3200	-
22200 CCK	SDGC 2200	SDGS 2200	SDGD 2200	-
22300 CCK	SDGC 2300	SDGS 2300	SDGD 2300	-
24000 CCK	SDGC 4000	SDGS 4000	SDGD 4000	-
24100 CCK	SDGC 4100	SDGS 4100	SDGD 4100	-

Plummer Blocks Suitable For Straight Bore Bearings SN, SNA, SNH, MNL, SAF, SDAF - 200/300 SD30__G, SD31__G, Series

Housing Series	Plummer Blocks Designation For Material of Construction			Refer Catlogue	Standard Shaft Seals Available						Special Seals		
											Teconite Seals		Seal For Oil Lubrication
	Cast Iron	Cast Steel	S. G. Iron	Page No.	Felt Strips	Felt Collar	V-Ring Seal	Double Lip Seal	Four Lip Seal	Labyrinth Seal	Axial Seals	Radial Seals	
1200,2200,	SN 200	SSN 200	SND 200	21	FS								
22200CC,	SNA 200	SSNA 200	SSNAD 200	-	-	TC	TA	TG	TL	TS	ND	NC	TU
23200CC	SNH 200	SSNH 200	SSNHD 200	37	-	TC	TA	TG	TL	TS	ND	NC	TU
	MNL 200	SMNL 200	SMNLD 200	45	-	TC	TA	TG	TL	TS	ND	NC	TU
	SAF 200	SAFS 200	SAF 200	81	-					LER	TER		
	SDAF 200	SDAFS 200	SDAFD 200	88	-					LER	TER		-
1300,2300,	SN 300	SSN 300	SSND 300	23	FS								
22300CC,	SNA 300	SSNA 300	SSNAD 300	-		TC	TA	TG	TL	TS	ND	NC	TU
21300CC	SNH 300	SSNH 300	SSNHD 300	37		TC	TA	TG	TL	TS	ND	NC	TU
	MNL 300	SMNL 300	SMNLD 300	45		TC	TA	TG	TL	TS	ND	NC	TU
	SAF 300	SAFS 300	SAFD 300	83						LER	TER		
	SDAF 300	SDAFS 300	SDAFD 300	89						LER	TER		
23100 CC	SD 3100 G	SDT 3100 G	SDD 3100 G	68	-	-	-	-	-	TS	ND	NC	TU
2300 CC	SD 3000 G	SDT 3000 G	SDD 3000 G	70	-	-	-	-	-	TS	ND	NC	TU
	SD 3300 G	SDT 3300 G	SDD 3300 G	66	-	-	-	-	-	TS	ND	NC	TU
23200 CC	SD 3200 G	SDT 3200 G	SDD 3200 G	-	-	-	-	-	-	TS	ND	NC	TU
22200 CC	SD 500	SDT 500	SDD 500	71	FS	-	-	-	-	TS	-	-	-
22300 CC	SD 600	SDT 600	SDD 600	72	FS	-	-	-	-	TS	-	-	-

Masta PRECISION HOUSINGS

Masta®
PRECISION HOUSINGS

Equivalent International Standards

Standard		Indian Standard Grade	ISO Code	American A.S.Code	DIN	Tensile Strength	Yield Stress	% Elongation	Hardness (BHN)
Regular	**Cast Iron**	FG:200 of IS:210	Grade 200 (FC:200)	ASTM-A48 Class-30A	DIN 1691 GG20	200 Mpa	N.A.	N.A.	160-220
Optional (On order)	**Cast Iron**	FG:260 of IS:210	Grade 260 (FC:260)	ASTM-A48 Class-35A	DIN 1691 GG25	260 Mpa	N.A.	N.A.	180-230
		FG:300 of IS:210	Grade 300 (FC:300)	ASTM-A48 Class-	DIN 1691 GG30	300 Mpa	N.A.	N.A.	180-230
Optional (On Order)	**S.G.Iron (Ductile Iron)**	Gr:500/7 of IS:1865	-	ASTM A536-84 70-50	DIN 1693 GGG:50	500	320	7	160-240
		Gr:400/15 of IS:1865	-	ASTM A536-84 60-40-18	DIN 1693 GGG:40	400	250	15	130-180
		Gr:450/10 of IS:1865	-	-	DIN 1693	450	310	10	160-210
		Gr:600/3 of IS:1865	-	-	DIN 1693 GGG:60	600	370	3	190-230
		Gr:700/2 ofIS:1865	-	ASTM A536-84 100-70-3	DIN 1693 GGG:70	700	420	2	245-335
	Cast Steel	Gr:230-450	ISO-R/185	ASTM A-27	DIN 1681	450	230	22%	N.A.
		of IS:1030 Gr:280-520 of IS:1030	-	ASTM A-27 70-36	DIN 1681 GS-52.3	520	280	18%	N.A.

Cast Steel Castings Optional Tests

	Optional Non-Destructive Tests (On Specific order only)	Acceptance Standards
➔	Ultrasonic Testing Inspection (UTI)	IS-9565
➔	Magnetic Particle Imaging Test (MPI)	IS-10724
➔	Liquid/Dye Penetration Test (DP Test)	IS-11732
➔	Radiographic Testing Inspection (RT)	IS-2938

Optional Mechanical Tests

➔	Impact Strength-Charpy V-Notch (in Joule)
➔	Angle of Bend (Degree)
➔	Reduction of Area (%)
	(Optional tests shall be carried out on specific orders, charging extra cost)

Spheroidal Graphitic Iron (Ductile Iron)

Various Grade of S.G. Iron Castings

	Ultimate Tensile Strength (Mpa)	Minimum 0.2% Proof Stress (Mpa)	Elongation %	Hardness
SG:900/2	900	600	2	280 - 335
SG:800/2	800	480	2	245 - 335
SG:700/2	700	420	2	225 - 305
SG:600/3	600	370	3	190 - 230
SG:500/7	500	320	7	160 - 240
SG:450/10	450	310	10	160 - 210
SG:400/15	400	250	15	130 - 180
SG:400/18	400	250	18	130 -180
SG:350/22	350	220	22	150

Accessories

Accessories	Symbol	Materials
Hexagonal Bolts	M	Mild Steel AISI-1010/8.8 Gr
Felt Strip	FS	(0.25 g/cm^3 Density) Compressed Wool
V-Ring	TA	NBR
V-Ring Seal Kit	TSNA - A	V-Ring NBR, Washer with NBR Lipped Metal (Galvanized M. S. Plate).
Laby Seal	TS/LER	Cast Iron/Aluminium
Double Lip Seal	TSN - G	Polyurethane - Half Rings
Four Lip Seal	TSN-L	Polyurethane - Circular Ring
Locating Rings	FRB	Galvanised M.S.Rings./Alu. Ring
Taconite Seal Kit	ND/NC/TER	Cast Iron/Aluminium
Felt Seal Kit	TSNA - C	Aluminium Body Felt Strip, rubber o' card.
End Cover	ASNA -	C.I./M.S. With NBR Lip
Eye Bolt	-	(Forged) Steel AISI-1010

Masta Bearing Housings can be supplied with following additional accessories on order
Drain Plugs, Continuous Lubrication System, Provisions for R.T.D., V.M.S., Automatic Grease Lubricator.

Masta Bearing Housings with water cooling arrangement and water jacket type cooling arrangement can be supplied against order.

Masta®
PRECISION HOUSINGS

Tolerance For Bearing Housing

Permissible Deviations on
Untoleranced Dimensions of Grey Iron Castings
Class-3 as per IS : 5519

Nominal Dimension (over-incl)	up to 30 mm	30 to 180	180 to 500	500 to 800	over 800mm
Deviation (mm)	± 0.6	± 1	± 2	± 3	± 4

Casting Tolerances

Length (mm)	1-100	100-200	200-400	400-800	800-1600
Tolerance (mm)	±1.5	±2.0	±3.0	±4.0	±5.0

Machining Tolerances (Unit: 0.001mm)

Housing Bore	H7/H8
Bearing Seat Width	H13
Shaft Opening (Shaft Seal ID)	H12
Half Center	js11

Nominal Size In mm	Limits of Tolerance (in 0.001 mm)							
Over-Incl.	H7	H8	js11	H12	h12	H13	h13	G7
10mm-18mm	+ 18 - 0	+ 27 - 0	± 55	+ 180 - 0	+ 0 - 180	+ 270 - 0	+ 0 - 270	+ 24 + 6
18mm-30mm	+ 21 - 0	+ 33 - 0	± 65	+ 210 - 0	+ 0 - 210	+ 330 - 0	+ 0 - 330	+ 28 + 7
30mm-50mm	+ 25 - 0	+ 39 - 0	±80	+ 250 - 0	+ 0 - 250	+ 390 - 0	+ 0 - 390	+ 34 + 9
50mm-80mm	+ 30 - 0	+ 46 - 0	± 95	+ 300 - 0	+ 0 - 300	+ 460 - 0	+ 0 - 460	+ 40 + 10
80mm-120mm	+ 35 - 0	+ 54 - 0	± 110	+ 350 - 0	+ 0 - 350	+ 540 - 0	+ 0 - 540	+ 47 + 12
120mm-180mm	+ 40 - 0	+ 63 - 0	± 125	+ 400 - 0	+ 0 - 400	+ 630 - 0	+ 0 - 630	+ 54 + 14
180mm-250mm	+ 46 - 0	+ 72 - 0	± 145	+ 460 - 0	+ 0 - 460	+ 720 - 0	+ 0 - 720	+ 61 + 15
250mm-315mm	+ 52 - 0	+ 81 - 0	± 160	+ 520 - 0	+ 0 - 520	+ 810 - 0	+ 0 - 810	+ 62 + 17
315mm-400mm	+ 57 - 0	+ 89 - 0	± 180	+ 570 - 0	+ 0 - 570	+ 890 - 0	+ 0 - 890	+ 75 + 18
400mm-500mm	+ 63 - 0	+ 97 - 0	± 200	+ 630 - 0	+ 0 - 630	+ 970 - 0	+ 0 - 970	+ 83 + 20
500mm-630mm	+ 70 - 0	+ 110 - 0	± 220	-	-	-	-	+ 92 + 22
630mm-800mm	+ 80 - 0	+ 125 - 0	± 250	-	-	-	-	+ 104 + 24
800mm-1000mm	+ 90 - 0	+ 140 - 0	± 280	-	-	-	-	+ 116 + 26

Sealing Arrangements for Plummer Block Housings

Masta®
PRECISION HOUSINGS

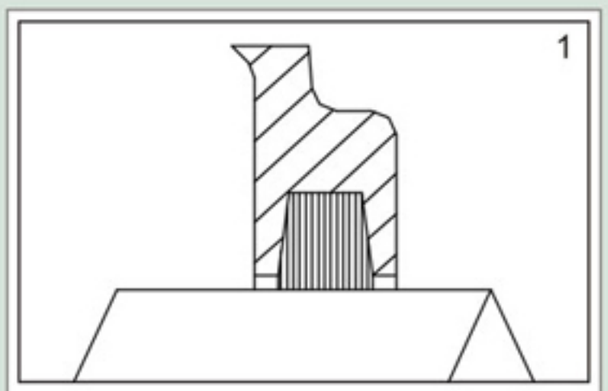

FS: FELT SEAL
(FOR **SN** TYPE HOUSING)

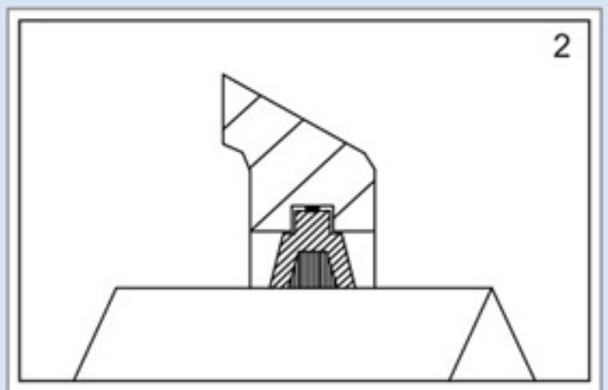

TC: FELT SEAL
(FOR **SNA, SNH, MNL** TYPE HOUSING)

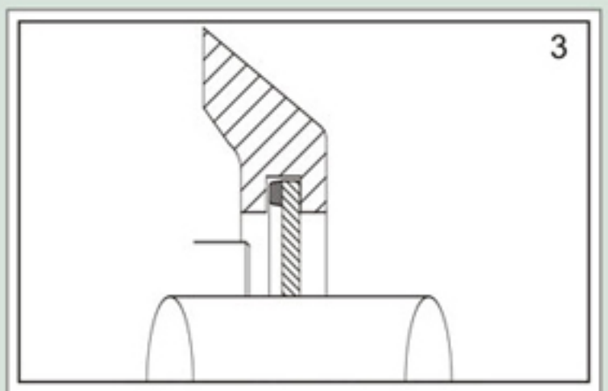

ENDCOVER
(FOR **SN, SNA, SNH, MNL** TYPE HOUSING)

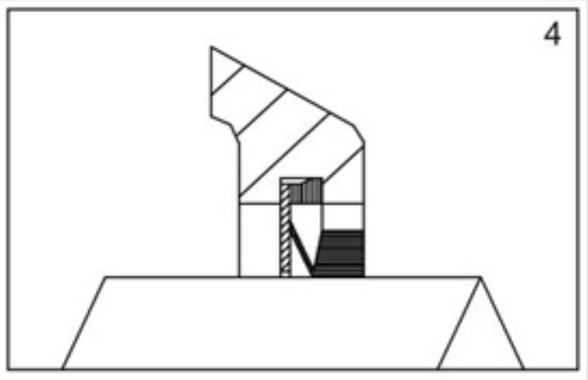

TA: V-RING SEAL
(FOR **SNA, SNH, MNL** TYPE HOUSING)

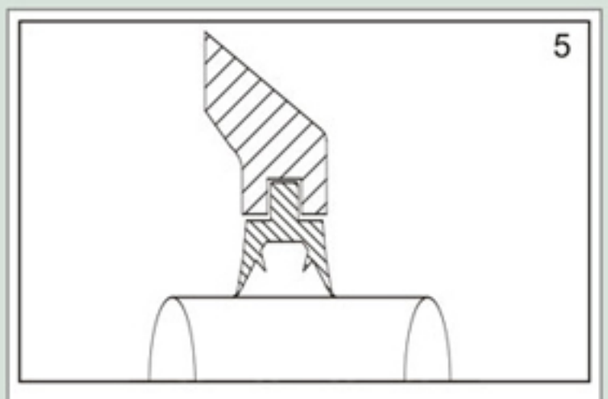

TG: DOUBLE LIP SEAL
(FOR **SNA, SNH, MNL** TYPE HOUSING)

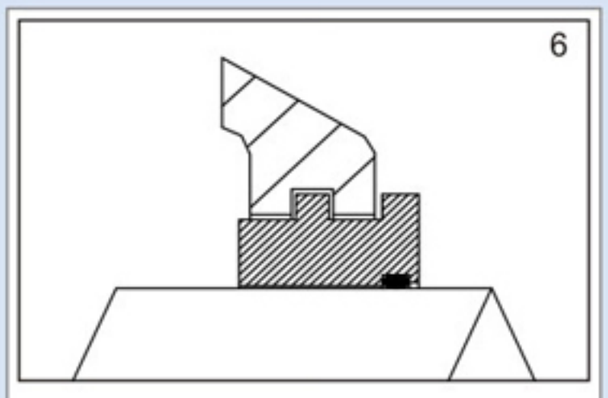

TS - LABYRINTH SEAL
(FOR **SNA, SNH, MNL** TYPE HOUSING)

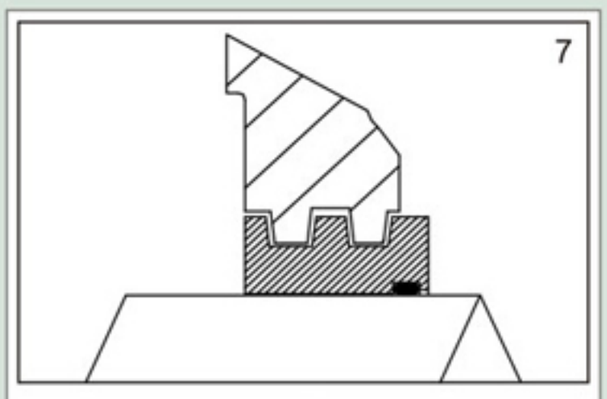

TS & LER : LABYRINTH
(FOR **SD/SAF/SDAF** TYPE HOUSING)

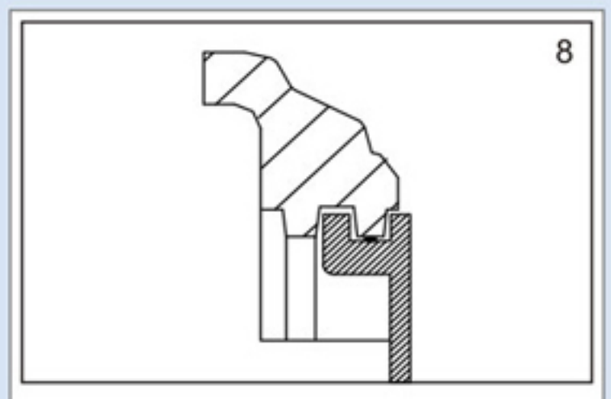

ENDCOVER
(FOR **SD, SAFT, SDJ** TYPE HOUSING)

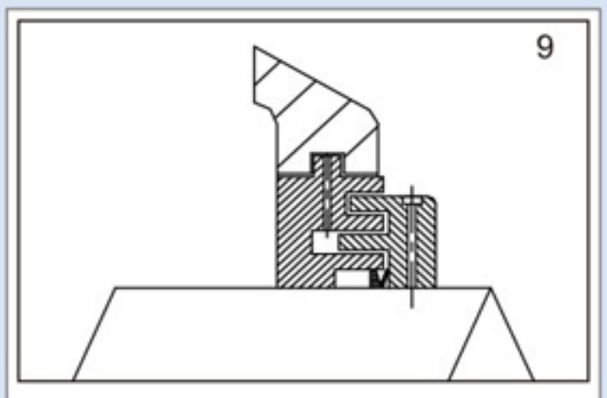

TNC : TACONITE SEAL (AXIAL)
(FOR **SNH, SD** TYPE HOUSING)

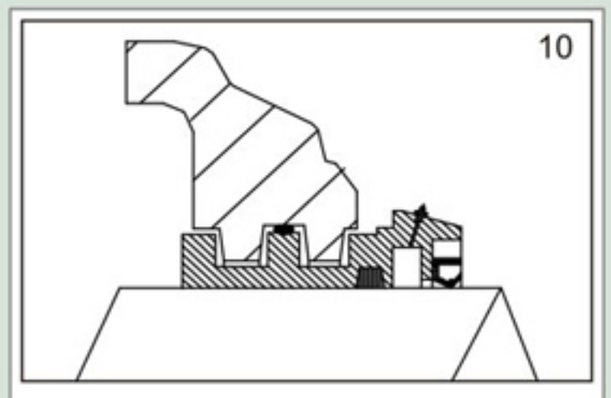

TER : TACONITE SEAL (RADIAL)
(FOR **SAF, SDAF** TYPE HOUSING)

Felt Strips Suitable for SN Series

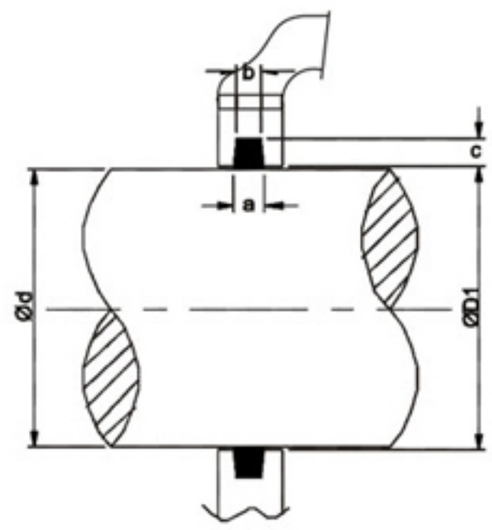

Shaft Dia d	FS No.	Diameter D1	a	b	c
20	110	21	4.2	3	5
25	190	26	5.5	4	6
30	190	31	5.5	4	6
35	190	36	5.5	4	6
40	190	41	5.5	4	6
45	190	46	5.5	4	6
50	260	51	7	5	8
55	260	55	7	5	8
60	260	61	7	5	8
65	260	66	7	5	8
70	330	71.5	8.2	6	9
75	330	76.5	8.2	6	9
80	330	81.5	8.2	6	9
85	330	86.5	8.2	6	9
90	370	92	9.5	7	10
100	460	102	11	8	12
110	460	112	11	8	12
115	460	117	11	8	12
120	460	122	11	8	12
125	510	127	12.4	9	14
130	510	132	12.4	9	14
135	510	137	12.4	9	14
140	680	142	13.9	10	16
145	680	147	13.9	10	16
150	680	152	13.9	10	16
155	680	157	13.9	10	16
160	.680	162	13.9	10	16
165	680	167	13.9	10	16
170	680	172	13.9	10	16

Masta®
PRECISION HOUSINGS

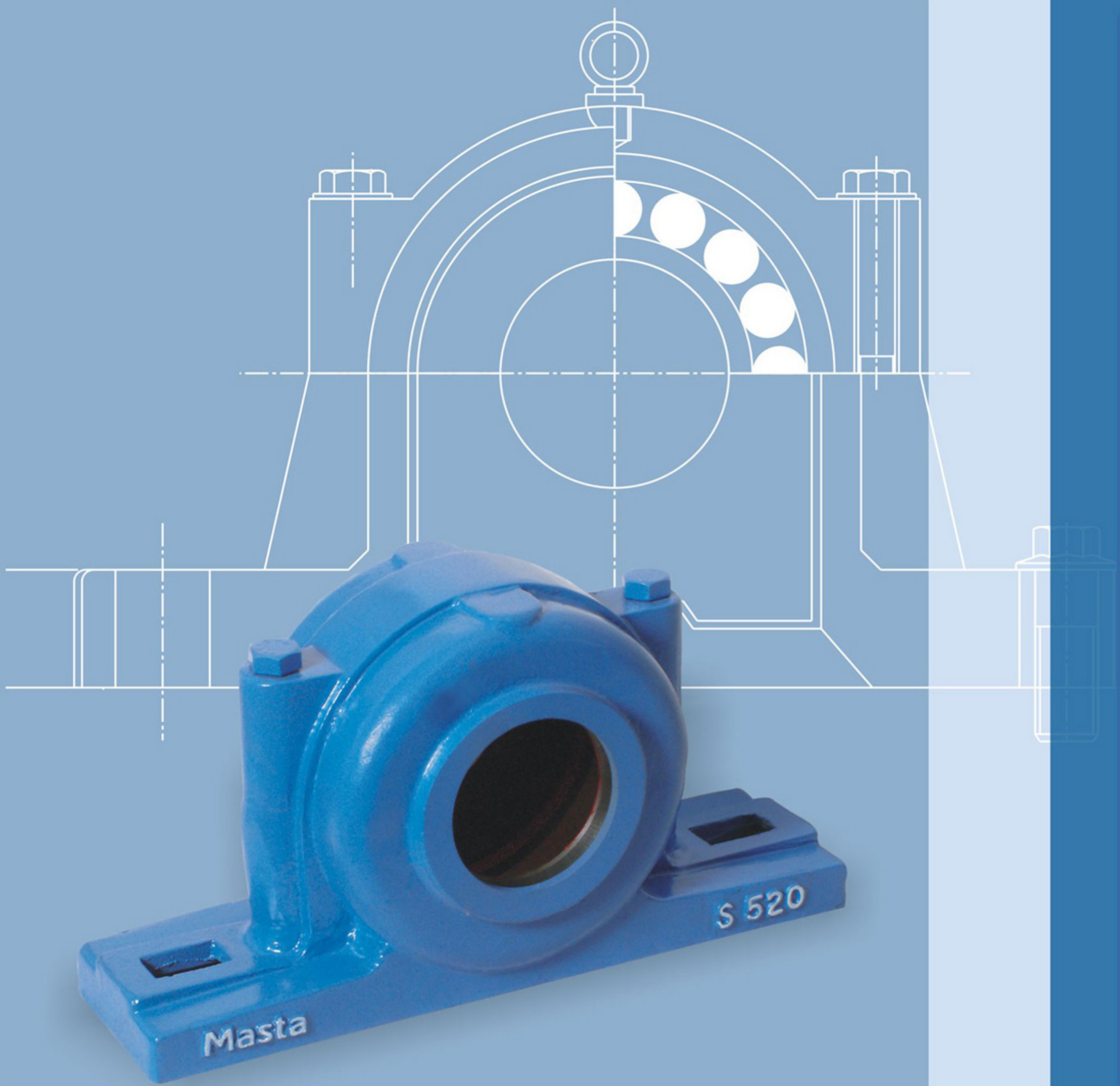

S Series

Masta®
PRECISION HOUSINGS

MASTA Plummer Blocks : Series S 500 (Suitable for Brg. No. 1200K, 2200K, 22200CCK Series)

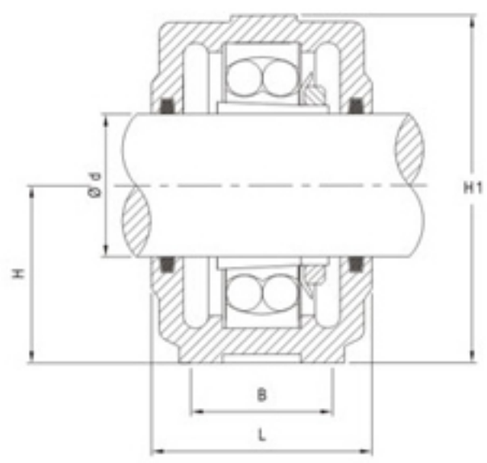

Housing no.	For Shaft Diameters (d)		DIMENSION IN MM						Inch S
	mm	inch	L	B	H	A	E	V	
S 505	20	3/4	62	52	40	165	125	12	1/2
S 506	25	1	80	55	50	190	150	17	1/2
S 507	30	1-1/8	82	52	50	190	150	18	1/2
S 508	35	1-1/4	87	60	60	210	167	18	1/2
S 509	40	1-1/2	90	60	60	220	170	20	1/2
5 S10	45	1-3/4	90	60	60	220	170	20	1/2
S 511	50	2	95	66	70	270	213	20	5/8
S 512	55	2-1/8	105	67	70	270	213	23	5/8
S 513	60	2-1/4	110	80	80	290	230	25	5/8
S 515	65	2-1/2	115	80	80	295	240	28	5/8
S 516	70	2-3/4	120	90	95	330	260	27	5/8
S 517	75	3	125	90	95	330	260	28	3/4
S 518	80	3-1/8	130	97	100	360	290	29	3/4
S 519	85	3-1/4	140	100	112	360	290	33	3/4
S 520	90	3-1/2	150	110	112	400	320	33	3/4
S 521	95	3-3/4	160	120	125	420	350	36	7/8
S 522	100	4	160	120	125	420	350	36	7/8
S 524	110	4-1/4	175	117	140	420	350	36	7/8
S 526	115	4-1/2	190	128	150	455	385	40	7/8
S 528	125	5	202	152	150	505	415	42	1-1/8
S 530	135	5-1/4	210	158	160	540	445	50	1-1/8
S 532	140	5-1/2	214	160	170	565	470	50	1-1/4
S 534	150	6	252	170	180	625	520	50	1-1/4
S 536	160	6-1/2	252	170	192	680	565	65	1-1/4
S 538	170	6-3/4	255	190	200	710	580	60	1-1/2
S 540	180	7	270	203	212	757	615	60	1-1/2
S 544	200	8	285	220	240	830	680	70	1-3/4

MASTA Plummer Blocks : Series S 600 (Suitable for Brg. No. 1300K, 2300K, 22300CCK Series)

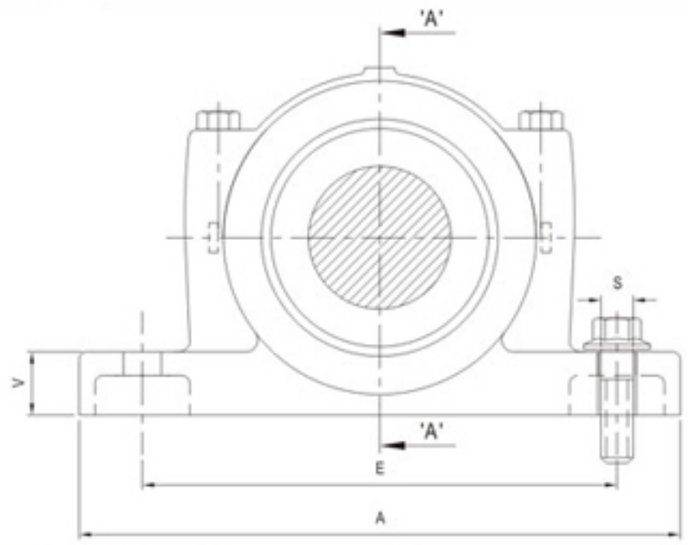

Housing no.	For Shaft Diameters (d)		DIMENSION IN MM						Inch S
	mm	inch	L	B	H	A	E	V	
S 605	20	3/4	80	52	50	190	150	16	1/2
S 606	25	1	82	52	50	190	150	18	1/2
S 607	30	1-1/8	92	60	60	215	162	20	1/2
S 608	35	1-1/4	92	64	60	215	162	20	1/2
S 609	40	1-1/2	95	69	70	275	210	23	5/8
S 610	45	1-3/4	115	70	70	270	210	23	5/8
S 611	50	2	115	80	80	290	233	25	5/8
S 612	55	2-1/8	115	80	80	290	230	25	5/8
S 613	60	2-1/4	126	87	95	325	260	27	3/4
S 615	65	2-1/2	129	97	100	360	290	27	3/4
S 616	70	2-3/4	140	100	112	365	290	27	3/4
S 617	75	3	162	110	112	395	320	33	3/4
S 618	80	3-1/8	165	122	125	422	340	30	7/8
S 619	85	3-1/4	165	125	125	422	340	37	7/8
S 620	90	3-1/2	178	119	140	422	358	40	1
S 621	95	3-3/4	190	130	150	455	378	40	1
S 622	100	4	190	130	150	455	378	40	1
S 624	110	4-1/4	210	158	160	540	445	48	1-1/8
S 626	115	4-1/2	212	157	170	560	470	48	1-1/4
S 628	125	5	255	170	180	630	520	50	1-1/4
S 630	135	5-1/4	255	170	190	685	565	65	1-1/2
S 632	140	5-1/2	260	190	200	720	580	65	1-1/2
S 634	150	6	270	203	212	757	615	65	1-1/2
S 636	160	6-1/2	270	210	225	795	650	65	1-1/2
S 638	170	6-3/4	285	220	240	830	680	70	1-3/4
S 640	180	7	300	230	250	870	720	70	1-3/4

Eye bolts (Lifting hooks) are provided on Plummer Blocks of S 524 & S 620 and above sizes.

Series S 30 Suitable for bearings of Series 230 with adapter Sleeves

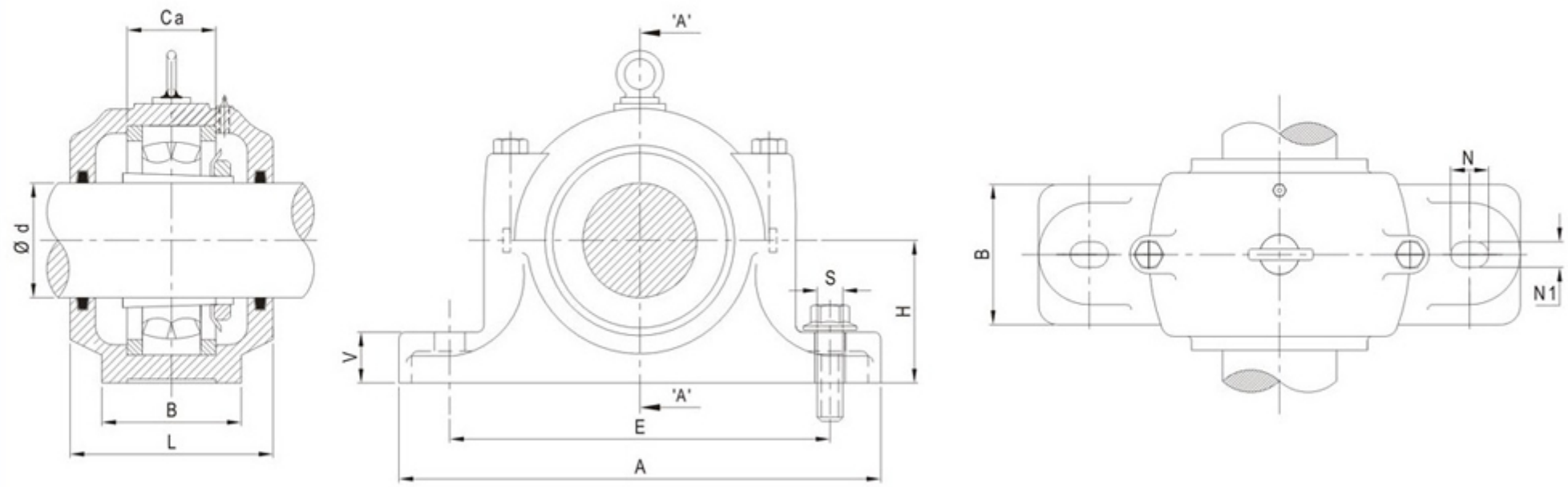

Plummer Block Designation	Shaft dia d1	DIMENSION IN MM							Bearing with Adapter Sleeve	Locating Rings	No.	Felt Strip No.
		L	H	A	B	E	V	S				
S 3024	110	160	112	390	110	320	40	24	23024 K + H 3024	10/180	1	FS 460
S 3026	115	175	125	420	120	350	45	24	23026 K + H 3026	10/200	1	FS 460
S 3028	125	185	140	420	120	350	45	24	23028 K + H 3028	10/210	1	FS 510
S 3030	135	190	150	460	130	380	50	24	23030 K + H 3030	10/225	1	FS 510
S 3032	140	190	150	470	130	390	50	24	23032 K + H 3032	10/240	1	FS 680
S 3034	150	220	160	540	160	450	60	30	23034 K + H 3034	10/260	1	FS 680
S 3036	160	235	170	560	160	470	60	30	23036 K + H 3036	10/280	1	FS 680
S 3038	170	235	170	560	160	470	60	30	23038 K + H 3038	10/290	1	FS 680
S 3040	180	235	180	615	170	515	60	30	23040 K + H 3040	10/310	1	FS 680

Masta®
PRECISION HOUSINGS

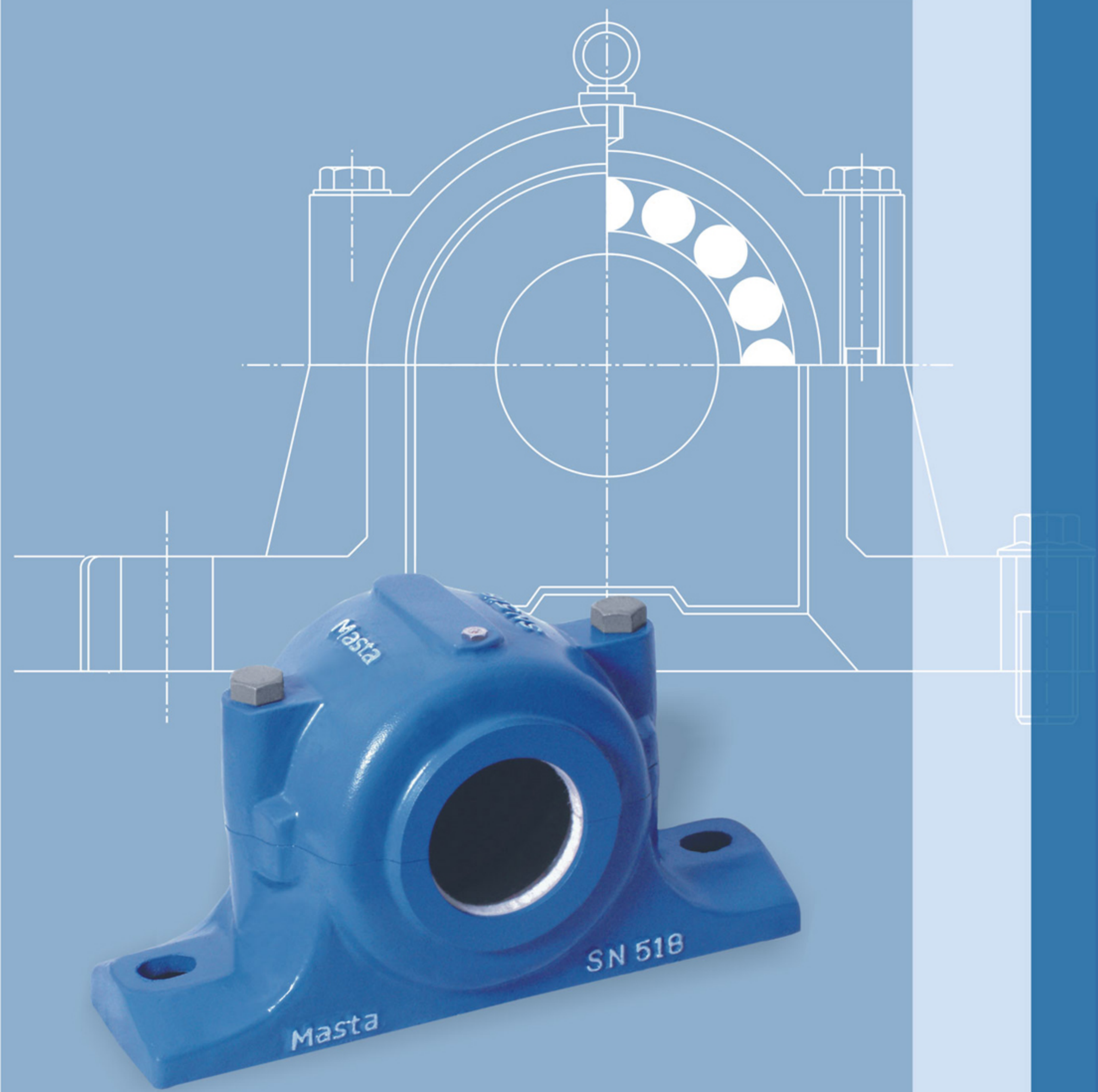

SN Series

About SN Series

"MASTA' SN Series horizontally split type Plummer Blocks are ideally suitable for moderate loads, speeds and relatively clean and temperate environment.

The width of bearing seat in the SN series plummer blocks is such that it gives bearings axial freedom. A locating bearing is positioned by the insertion of one or two locating rings as the case may be for its axial location.

SN Series plummer blocks are suitable for grease lubrication. Felt strips and grease nipples can be supplied along with plummer blocks on order.

Series of Plummer blocks	Suitable for bearing series
SN 500	1200 K, 2200 K, 22200 CK series bearings with adapter sleeves.
SN 200	1200, 2200, 22200 C series of cylindrical (straight) bore bearings.
SN 600	1300 K, 2300 K, 22300 CK series bearings with adapter sleeves.
SN 300	1300, 2300, 22300 C series of cylindrical (straight) bore bearings.

Masta® PRECISION HOUSINGS

Plummer Blocks (Bearing housings)
SN 500 Series Suitable for Bearings with adapter sleeves

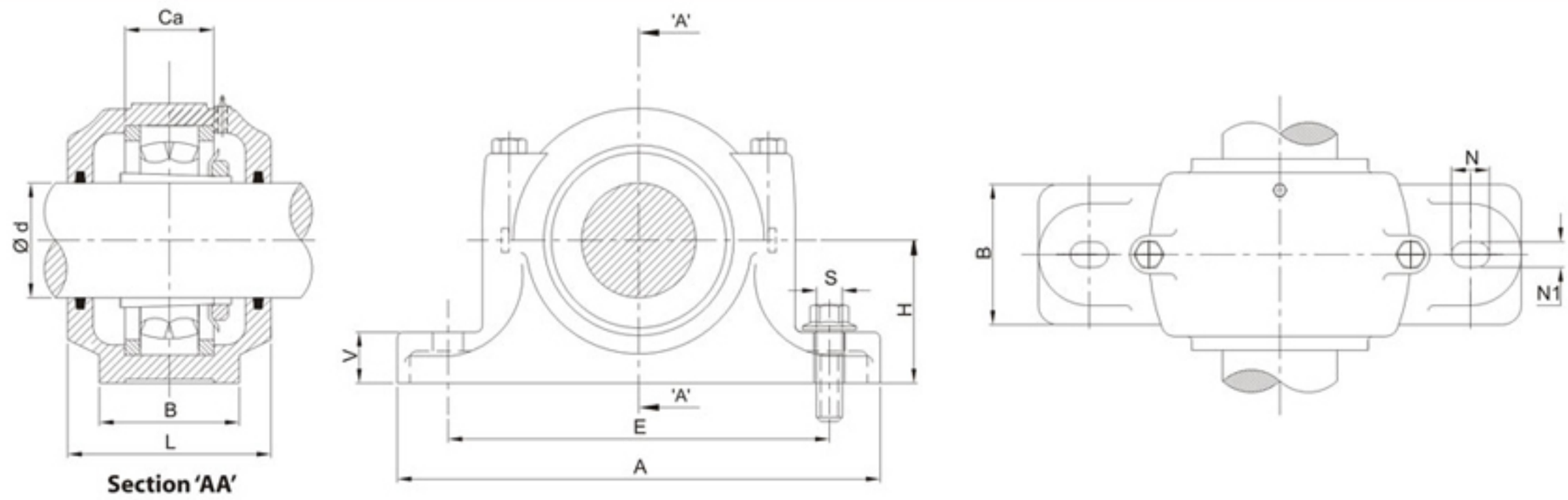

Plummer Block Designation	Shaft dia (d)		DIMENSION IN MM										Approx Weight kg.	Bearing with Adapter Sleeve	Locating Rings		Felt Strip No.
	mm	inch	L	H	A	B	E	V	S	Ca	N	N1			Size Width/Dia	Nos. Per Hsg.	
SN 505	20	3/4	67	40	165	46	130	19	12	25	20	15	1.12	1205 K + H 205	5/52	2	FS 110
														2205 K + H 305	7/52	1	
SN 506	25	1	77	50	185	52	150	22	12	30	20	15	1.63	1206 K + H 206	7/62	2	FS 190
														2206 K + H 306	10/62	1	
SN 507	30	1-1/8	82	50	185	52	150	22	12	33	20	15	1.93	1207 K + H 207	8/72	2	FS 190
														2207 K + H 307	10/72	1	
														22207 CK+ H 307	10/72	1	
SN 508	35	1-1/4	85	60	205	60	170	25	12	34	20	15	2.63	1208 K + H 208	8/80	2	FS 190
														2208 K + H 308	11/80	1	
														22208 CK+ H 308	11/80	1	
SN 509	40	1-1/2	85	60	205	60	170	25	12	31	20	15	2.85	1209 K + H 209	6/85	2	FS 190
														2209 K + H 309	8/85	1	
														22209 CK+ H 309	8/85	1	
SN 510	45	1-3/4	90	60	205	60	170	25	12	33	20	15	3.00	1210 K + H 210	6.5/90	2	FS 190
														2210 K + H 310	10/90	1	
														22210 CK+ H 310	10/90	1	
SN 511	50	2	95	70	255	70	210	28	16	33	23	18	4.00	1211 K + H 211	6/100	2	FS 260
														2211 K + H 311	8/100	1	
														22211 CK+ H 311	8/100	1	
SN 512	55	2-1/8	105	70	255	70	210	30	16	38	23	18	4.6	1212 K + H 212	8/110	2	FS 260
														2212 K + H 312	10/110	1	
														22212 CK+ H 312	10/110	1	
SN 513	60	2-1/4	110	80	275	80	230	30	16	43	23	18	5.95	1213 K + H 213	10/120	2	FS 260
														2213 K + H 313	12/120	1	
														22213 CK+ H 313	12/120	1	
SN 515	65	2-1/2	115	80	280	80	230	30	16	41	23	18	6.85	1215 K + H 215	8/130	2	FS 260
														2215 K + H 315	10/130	1	
														22215 CK+ H 315	10/130	1	
SN 516	70	2-3/4	120	95	315	90	260	32	20	43	27	22	8.45	1216 K + H 216	8.5/140	2	FS 330
														2216 K + H 316	10/140	1	
														22216 CK+ H 316	10/140	1	
SN 517	75	3	125	95	320	90	260	32	20	46	27	22	9.5	1217 K + H 217	9/150	2	FS 330
														2217 K + H 317	10/150	1	
														22217 CK+ H 317	10/150	1	

Masta®
PRECISION HOUSINGS

SN 500 Series

Plummer Blocks (Bearing Housings)
Series SN 500 for bearings with adapter sleeves.

Plummer Block SN 524 and above only are supplied with eye bolt on cap

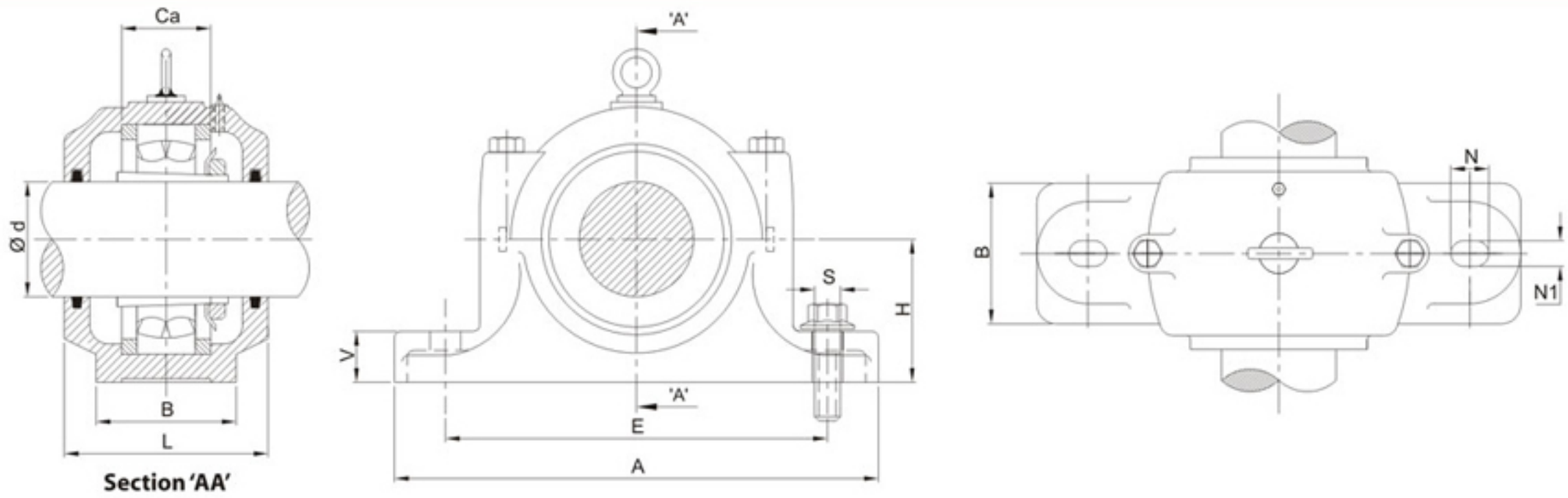

Plummer Block Designation	Shaft dia (d)		DIMENSION IN MM										Approx Weight kg.	Bearing with Adapter Sleeve	Locating Rings		Felt Strip No.
	mm	inch	L	H	A	B	E	V	S	Ca	N	N1			Size Width/Dia	Nos. Per Hsg.	
SN 518	80	—	145	100	345	100	290	35	20	62	27	22	12.3	1218 K + H 218	16.2/160	2	FS 330
														2218 K + H 318	11.2/160	2	
														22218CK + H 318	11.2/160	2	
														23218CK + H 2318	10/160	1	
SN 519	85	3-1/4	145	112	345	100	290	35	20	53	27	22	14.2	1219 K + H 219	10.5/170	2	FS 330
														2219 K + H 319	10/170	1	
														22219CK + H 319	10/170	1	
SN 520	90	3-1/2	160	112	380	110	320	40	24	70	32	26	15.5	1220 K + H 220	18/180	2	FS 370
														2220 K + H 320	12/180	2	
														22220CK+ H 320	12/180	2	
														23220CK+ H 2320	9.7/180	1	
SN 522	100	4	175	125	410	120	350	45	24	80	32	26	20.0	1222 K + H 222	21/200	2	FS 460
														2222 K + H 322	13.5/200	2	
														22222CK+ H 322	13.5/200	2	
														23222CK+ H 2322	10/200	1	
SN 524	110	4-1/4	185	140	410	120	350	45	24	86	32	26	23	22224CK+ H 3124	14/215	2	FS 460
														23224CK+ H 2324	10/215	1	
SN 526	115	4-1/2	190	150	445	130	380	50	24	90	35	28	28.9	22226CK+ H 3126	13/230	2	FS 460
														23226CK+ H 2326	10/230	1	
SN 528	125	5	205	150	500	150	420	50	30	98	42	35	36.4	22228CK+ H 3128	15/250	2	FS 510
														23228CK+ H 2328	10/250	1	
SN 530	135	5-1/4	220	160	530	160	450	60	30	106	42	35	43.5	22230CK+ H 3130	16.5/270	2	FS 510
														23230CK+ H 2330	10/270	1	
SN 532	140	5-1/2	235	170	550	160	470	60	30	114	42	35	50.5	22232CK+ H 3132	17/290	2	FS 680
														23232CK+ H 2332	10/290	1	
SN 534	150	6	235	180	620	170	520	65	30	120	42	35	57.0	22234CK+ H 3134	17/310	2	FS 680
														23234CK+ H 2334	10/310	1	
SN 536	160	6-1/2	245	190	650	180	560	65	30	122	42	35	72.0	22236CK+ H 3136	18/320	2	FS 680
														23236CK+ H 2336	10/320	1	
SN 538	170	6-3/4	255	200	680	190	580	70	36	130	50	42	90.0	22238CK+ H 3138	19/340	2	FS 680
														23238CK+ H 2338	10/340	1	

Masta® PRECISION HOUSINGS

Plummer Blocks (Bearing Housings)
Series SN 600 for bearings with adapter sleeves.

Plummer Block SN 620 and above only are supplied with eye bolt on cap

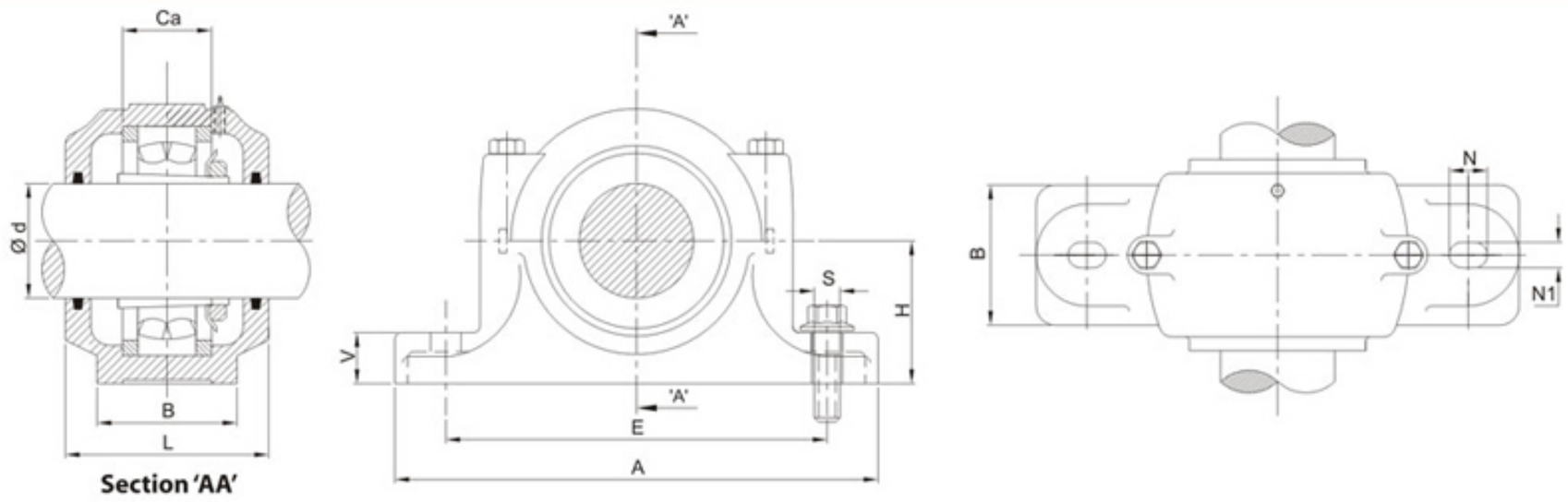

Plummer Block Designation	Shaft dia (d)		DIMENSION IN MM										Approx Weight kg.	Bearing with Adapter Sleeve	Locating Rings		Felt Strip No.
	mm	inch	L	H	A	B	E	V	S	Ca	N	N1			Size Width/Dia	Nos. Per Hsg.	
SN 605	20	3/4	80	50	185	52	150	22	12	34	20	15	1.12	1305 K + H 305	8.5/62	2	FS 110
														2305 K +H 2305	10/62	1	
SN 606	25	1	82	50	185	52	150	22	12	37	20	15	1.85	1306 K + H 306	9/72	2	FS 190
														2306 K + H 2306	10/72	1	
SN 607	30	1-1/8	90	60	205	60	170	25	12	41	20	15	2.8	1307 K + H 307	10/80	2	FS 190
														21307 K + H 307	10/80	2	
														2307 K + H 2307	10/80	1	
SN 608	35	1-1/4	95	60	205	60	170	25	12	43	20	15	3.15	1308 K + H 308	10/90	2	FS 190
														21308 K + H 308	10/90	2	
														2308 K + H 2308	10/90	1	
														22308 CK+ H 2308	10/90	1	
SN 609	40	1-1/2	105	70	255	70	210	28	16	46	23	18	4.3	1309 K + H 309	10.5/100	2	FS 190
														21309 K + H 309	10.5/100	2	
														2309 K + H 2309	10/100	1	
														22309 CK+ H 2309	10/100	1	
SN 610	45	1-3/4	115	70	255	70	210	30	16	50	23	18	4.9	1310 K + H 310	11.5/110	2	FS 190
														21310 K + H 310	11.5/110	2	
														2310 K + H 2310	10/110	1	
														22310C K + H 2310	10/110	1	
SN 611	50	2	120	80	275	80	230	30	16	53	23	18	5.5	1311 K + H 311	12/120	2	FS 260
														21311 K + H 311	12/120	2	
														2311 K + H 2311	10/120	1	
														22311 CK+ H 2311	10/120	1	
SN 612	55	2-1/8	125	80	280	80	230	30	16	56	23	18	7.10	1312 K + H 312	12.5/130	2	FS 260
														21312 K + H 312	12.5/130	2	
														2312 K + H 2312	10/130	1	
														22312 CK+ H 2312	10/130	1	
SN 613	60	2-1/4	130	95	315	90	260	32	20	58	27	22	9.2	1313 K + H 313	12.5/140	2	FS 260
														21313 K + H 313	12.5/140	2	
														2313 K + H 2313	10/140	1	
														22313 CK+ H 2313	10/140	1	
SN 614	70		130	95	320	90	260	32	20	61	27	22	10.5	1314 K + H 314	13/150	2	FS 260
														21314 K + H 314	13/150	2	
														2314 K + H 2314	10/150	1	
														22314CK+AHX 2314	10/150	1	

Masta®
PRECISION HOUSINGS

SN 600 Series

Plummer Blocks (Bearing housings) Series SN 600 for bearings with adapter sleeves

Plummer Block SN 620 and above only are supplied with eye bolt on cap

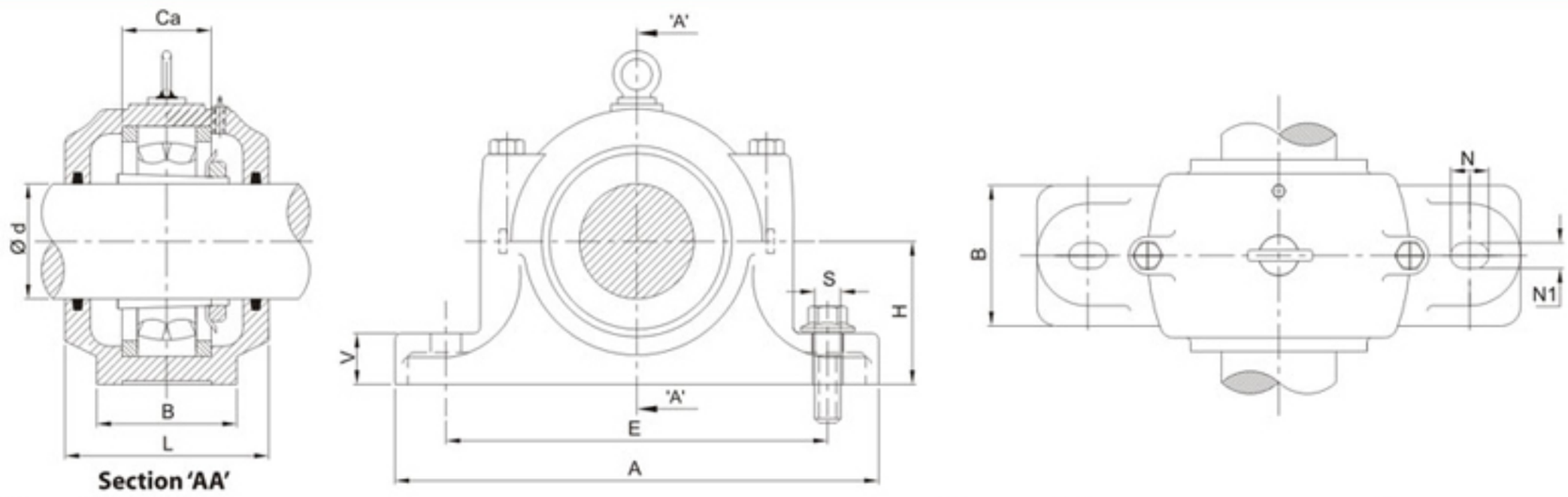

Plummer Block Designation	Shaft dia (d)		DIMENSION IN MM										Approx Weight kg.	Bearing with Adapter Sleeve	Locating Rings		Felt Strip No.
	mm	inch	L	H	A	B	E	V	S	Ca	N	N1			Size Width/Dia	Nos. Per Hsg.	
SN 615	65	2-1/2	140	100	345	100	290	35	20	65	27	22	11.65	1315 K + H 315	14/160	2	FS 260
														21315 K + H 315	14/160	2	
														2315K + H 2315	10/160	1	
														22315CK+ H 2315	10/160	1	
SN 616	70	2-3/4	145	112	345	100	290	35	20	68	27	22	12.9	1316 K + H 316	14.5/170	2	FS 330
														21316 K + H 316	14.5/170	2	
														2316 K + H 2316	10/170	1	
														22316CK + H 2316	10/170	1	
SN 617	75	3	155	112	380	110	320	40	24	70	32	26	15.5	1317 K + H 317	14.5/180	2	FS 330
														21317 K + H 317	14.5/180	2	
														2317 K + H 2317	10/180	1	
														22317 CK+ H 2317	10/180	1	
SN 618	80	3-3/16	160	112	380	110	320	40	24	74	32	26	16.8	1318 K + H 318	15.5/190	2	FS 330
														21318 K + H 318	15.5/190	2	
														2318 K + H 2318	10/190	1	
														22318 CK+ H 2318	10/190	1	
SN 619	85	3-3/8	170	125	410	120	350	45	24	77	32	26	20.5	1319 K + H 319	16/200	2	FS 330
														21319 K + H 319	16/200	2	
														2319 K + H 2319	10/200	1	
														22319 CK+ H 2319	10/200	1	
SN 620	90	3-1/2	175	140	410	120	350	45	24	83	32	26	22.8	1320 K + H 320	18/215	2	FS 370
														21320 K + H 320	18/215	2	
														2320 K + H 2320	10/215	1	
														22320 CK+ H 2320	10/215	1	
SN 622	100	4	190	150	450	130	390	50	24	90	35	28	28.9	21322 K + H 322	20/240	2	FS 370
														22322 CK+ H 2322	10/240	1	
SN 624	110	4-1/4	200	160	530	160	450	60	30	96	42	35	35.8	20324 K+ H 3124	20.5/260	2	FS 460
														22324 CK+ H 2324	10/260	1	
SN 626	115	4-1/2	210	170	550	160	470	60	30	103	42	35	50.5	20326 K+ H 3126	22.5/280	2	FS 460
														22326 CK+ H 2326	10/280	1	
SN 628	125	5	235	180	620	170	520	65	30	112	42	35	81.0	20328 K+ H 3128	25/300	2	FS 510
														22328 CK+ H 2328	10/300	1	
SN 630	135	5-1/4	245	190	650	180	560	65	30	118	42	35	92.0	20330 K+ H 3130	26.5/320	2	FS 510
														22330 CK+ H 2330	10/320	1	
SN 632	140	5-1/2	255	200	680	190	580	70	36	124	50	42	100.0	20332 K+ H 3132	28/340	2	FS 680
														22332 CK+ H 2332	10/340	1	

Masta®
PRECISION HOUSINGS

Plummer Blocks (Bearing housings)
Series SN 200 for bearings with Cylindrical Straight Bore

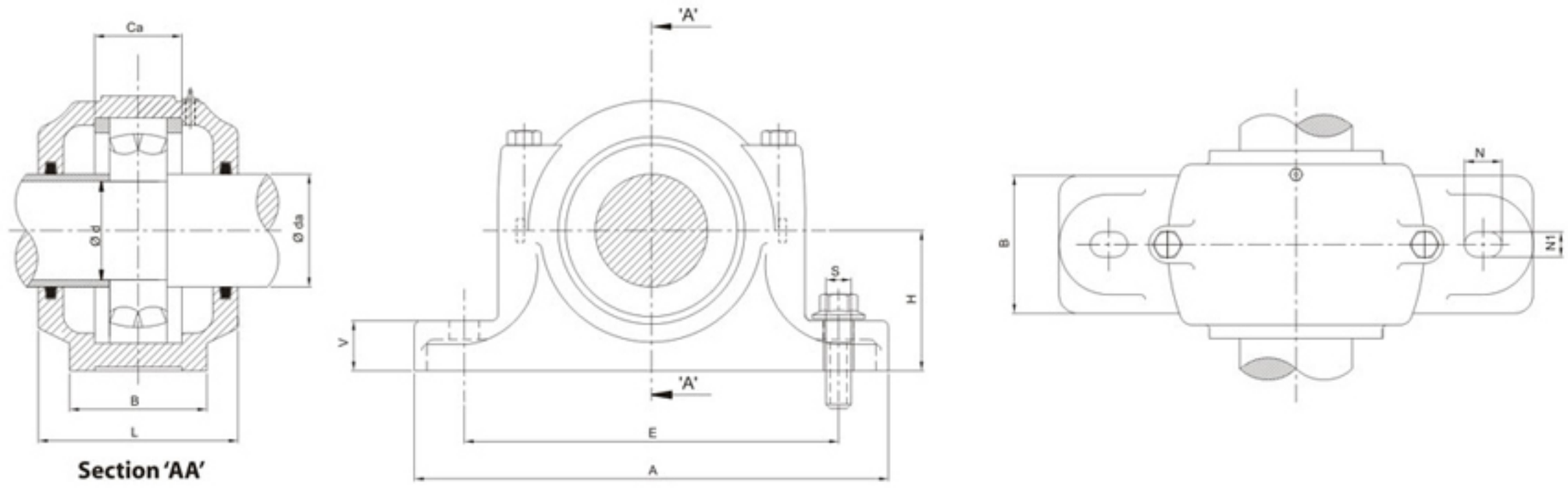

Plummer Block Designation	Shaft dia		DIMENSION IN MM										Approx Weight kg.	Bearing No.	Locating Rings		Felt Strip No.
	d	da	L	H	A	B	E	V	S	Ca	N	N1			Size Width/Dia	Nos. Per Hsg.	
SN 205	25	30	67	40	165	46	130	19	12	25	20	15	1.12	1205	5/52	2	FS 190
														2205	7/52	1	
SN 206	30	35	77	50	185	52	150	22	12	30	20	15	1.63	1206	7/62	2	FS 190
														2206	10/62	1	
SN 207	35	45	82	50	185	52	150	22	12	33	20	15	1.98	1207	8/72	2	FS 190
														2207	10/72	1	
														22207 C	10/72	1	
SN 208	40	50	85	60	205	60	170	25	12	34	20	15	2.63	1208	8/80	2	FS 260
														2208	11/80	1	
														22208 C	11/80	1	
SN 209	45	55	85	60	205	60	170	25	12	31	20	15	2.85	1209	6/85	2	FS 260
														2209	8/85	1	
														22209 C	8/85	1	
SN 210	50	60	90	60	205	60	170	25	12	33	20	15	3.10	1210	6.5/90	2	FS 260
														2210	10/90	1	
														22210 C	10/90	1	
SN 211	55	65	95	70	255	70	210	28	16	33	23	18	4.00	1211	6/100	2	FS 260
														2211	8/100	1	
														22211 C	8/100	1	
SN 212	60	70	105	70	255	70	210	30	16	38	23	18	4.6	1212	8/110	2	FS 330
														2212	10/110	1	
														22212 C	10/110	1	
SN 213	65	75	110	80	275	80	230	30	16	43	23	18	6.00	1213	10/120	2	FS 330
														2213	12/120	1	
														22213 C	12/120	1	
SN 215	75	85	115	80	280	80	230	30	16	41	23	18	6.85	1215	8/130	2	FS 330
														2215	10/130	1	
														22215 C	10/130	1	
SN 216	80	90	120	95	315	90	260	32	20	43	27	22	8.45	1216	8.5/140	2	FS 370
														2216	10/140	1	
														22216 C	10/140	1	
SN 217	85	95	125	95	320	90	260	32	20	46	27	22	9.35	1217	9/150	2	FS 370
														2217	10/150	1	
														22217 C	10/150	1	

Masta®
PRECISION HOUSINGS

SN 200 Series

Plummer Blocks (Bearing housings) Series SN 200 for bearings with Cylindrical Straight Bore

Plummer Block SN 224 and above only are supplied with eye bolt on cap

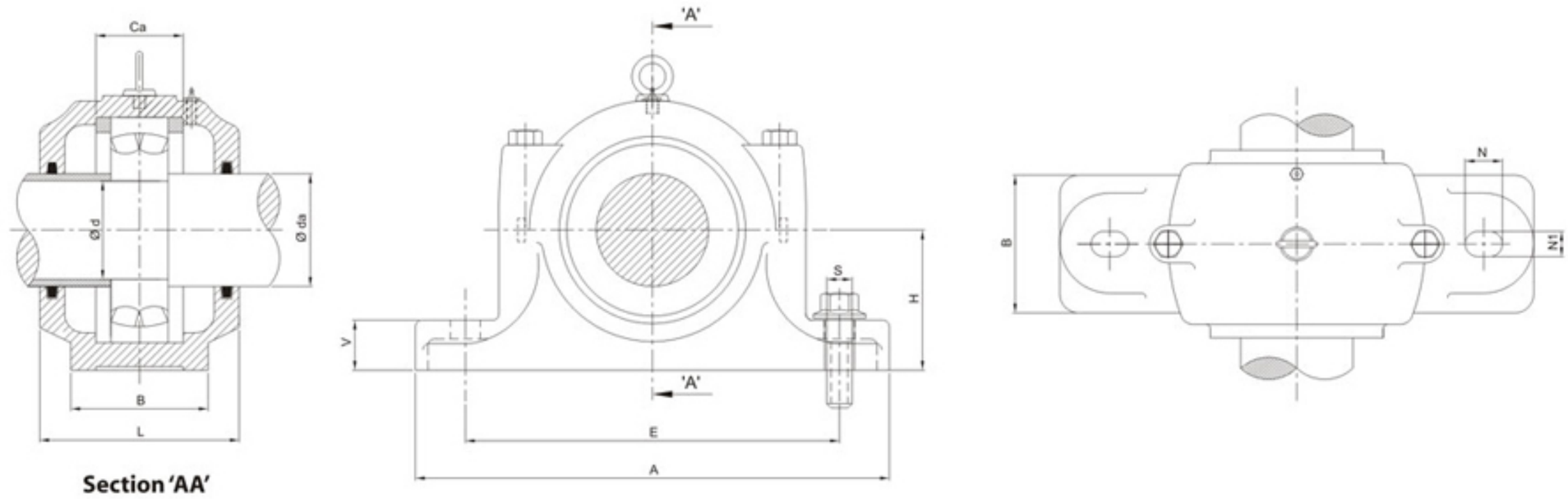

Section 'AA'

Plummer Block Designation	Shaft dia		DIMENSION IN MM										Approx Weight kg.	Bearing No.	Locating Rings		Felt Strip No.
	d	da	L	H	A	B	E	V	S	Ca	N	N1			Size Width/Dia	Nos. Per Hsg.	
SN 218	90	100	145	100	345	100	290	35	20	62	27	22	12.1	1218	16.2/160	2	FS 460
														2218 C	11.2/160	2	
														22218 C	11.2/160	2	
														23218 C	10/160	1	
SN 219	95	110	145	112	345	100	290	35	20	53	27	22	13.9	1219	10.5/170	2	FS 460
														2219	10/170	1	
														22219	10/170	1	
SN 220	100	115	160	112	380	110	320	40	24	70	32	26	15.5	1220	18/180	2	FS 460
														2220	12/180	2	
														22220 C	12/180	2	
														23220 C	9.7/180	1	
SN 222	110	125	175	125	410	120	350	45	24	80	32	26	20.0	1222	21/200	2	FS 510
														2222	13.5/200	2	
														22222 C	13.5/200	2	
														23222 C	10/200	1	
SN 224	120	135	185	140	410	120	350	45	24	86	32	26	22.8	22224 C	14/215	2	FS 510
														23224 C	10/215	1	
SN 226	130	145	190	150	445	130	380	50	24	90	35	28	28.9	22226 C	13/230	2	FS 680
														23226 C	10/230	1	
SN 228	140	155	205	150	500	150	420	50	30	98	42	35	36.4	22228 C	15/250	2	FS 680
														23228 C	10/250	1	
SN 230	150	165	220	160	530	160	450	60	30	106	42	35	43.5	22230 C	16.5/270	2	FS 680
														23230 C	10/270	1	
SN 232	160	175	235	170	550	160	470	60	30	114	42	35	50.5	22232 C	17/290	2	FS 680
														23232 C	10/290	1	
SN 234	170	185	235	180	620	170	520	65	30	120	42	35	81.0	22234 C	17/310	2	FS 680
														23234 C	10/310	1	
SN 236	180	195	245	190	650	180	560	65	30	122	42	35	92.0	22236 C	18/320	2	FS 830
														23236 C	10/320	1	
SN 238	190	205	255	200	680	190	580	70	36	130	50	42	100.0	22238 C	19/340	2	FS 830
														23238 C	10/340	1	

Masta® PRECISION HOUSINGS

Plummer Blocks (Bearing housings)
Series SN 300 for bearings with Cylindrical Bore

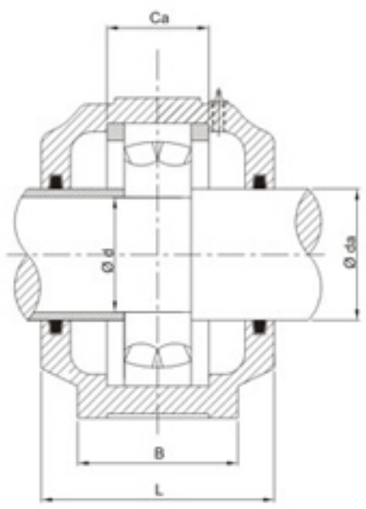

Section 'AA'

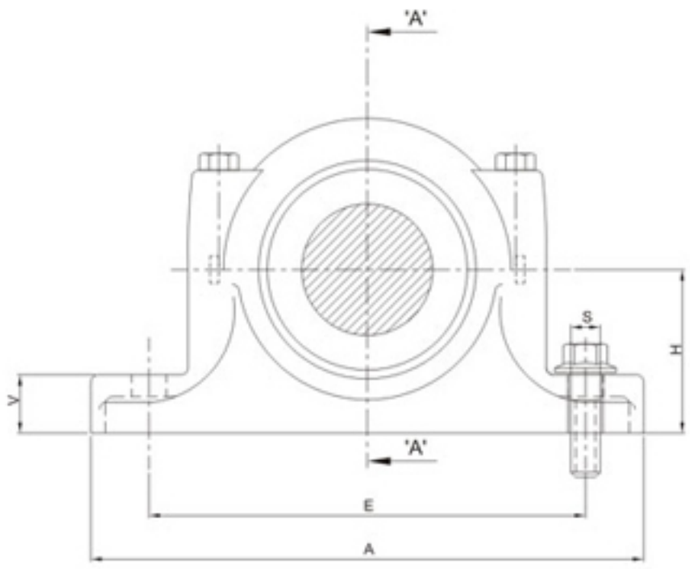

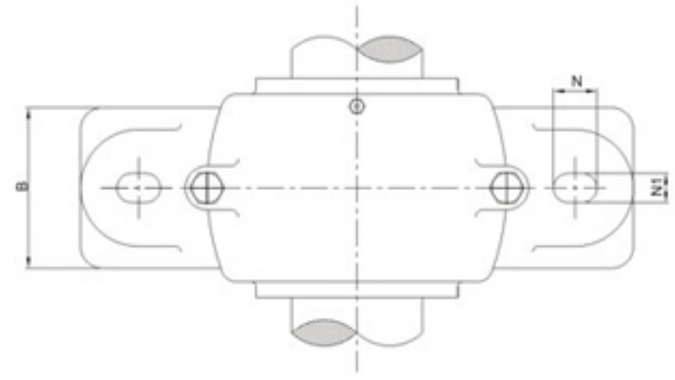

Plummer Block Designation	Shaft dia		DIMENSION IN MM										Approx Weight kg.	Bearing No.	Locating Rings		Felt Strip No.
	d	da	L	H	A	B	E	V	S	Ca	N	N1			Size Width/Dia	Nos. Per Hsg.	
SN 305	25	30	80	50	185	52	150	22	12	34	20	15	1.63	1305	8.5/62	2	FS 190
														2305	10/62	1	
SN 306	30	35	82	50	185	52	150	22	12	37	20	15	1.85	1306	9/72	2	FS 190
														2306	10/72	1	
SN 307	35	45	90	60	205	60	170	25	12	41	20	15	2.65	1307	10/80	2	FS 190
														21307	10/80	2	
														2307	10/80	1	
SN 308	40	50	95	60	205	60	170	25	12	43	20	15	3.00	1308	10/90	2	FS 260
														21308	10/90	2	
														2308	10/90	1	
														22308 C	10/90	1	
SN 309	45	55	105	70	255	70	210	28	16	46	23	18	4.15	1309	10.5/100	2	FS 260
														21309	10.5/100	2	
														2309	10/100	1	
														22309 C	10/100	1	
SN 310	50	60	115	70	255	70	210	30	16	50	23	18	4.8	1310	11.5/110	2	FS 260
														21310	11.5/110	2	
														2310	10/110	1	
														22310 C	10/110	1	
SN 311	55	65	120	80	275	80	230	30	16	53	23	18	5.5	1311	12/120	2	FS 260
														21311	12/120	2	
														2311	10/120	1	
														22311 C	10/120	1	
SN 312	60	70	125	80	280	80	230	30	16	56	23	18	6.6	1312	12.5/130	2	FS 330
														21312	12.5/130	2	
														2312	10/130	1	
														22312 C	10/130	1	
SN 313	65	75	130	95	315	90	260	32	20	58	27	22	8.7	1313	12.5/140	2	FS 330
														21313	12.5/140	2	
														2313	10/140	1	
														22313 C	10/140	1	
SN 314	70	80	130	95	320	90	260	32	20	61	27	22	10.0	1314	13/150	2	FS 330
														21314	13/150	2	
														2314	10/150	1	
														22314 C	10/150	1	

Masta®
PRECISION HOUSINGS

SN 300 Series

Plummer Blocks (Bearing housings)
Series SN 300 for bearings with Cylindrical Straight Bore

Plummer Block SN 320 and above only are supplied with eye bolt on cap

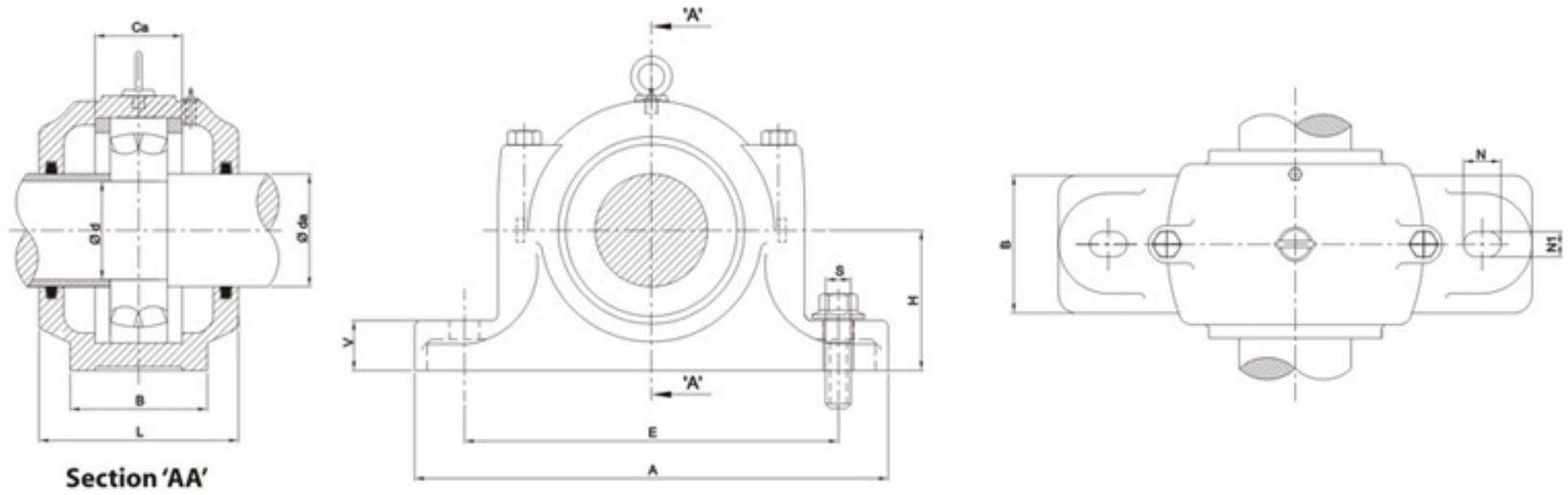

Section 'AA'

Plummer Block Designation	Shaft dia		DIMENSION IN MM										Weight kg.	Bearing No.	Locating Rings	No.	Felt Strip No.
	d	da	L	H	A	B	E	V	S	Ca	N	N1					
SN 315	75	85	140	100	345	100	290	35	20	65	27	22	11.65	1315	14/160	2	FS 330
														21315	14/160	2	
														2315	10/160	1	
														22315 C	10/160	1	
SN 316	80	90	145	112	345	100	290	35	20	68	27	22	12.5	1316	14.5/170	2	FS 370
														21316	14.5/170	2	
														2316	10/170	1	
														22316 C	10/170	1	
SN 317	85	95	155	112	380	110	320	40	24	70	32	26	15	1317	14.5/180	2	FS 370
														21317	14.5/180	2	
														2317	10/180	1	
														22317 C	10/180	1	
SN 318	90	105	160	112	380	110	320	40	24	74	32	26	16.8	1318	15.5/190	2	FS 460
														21318	15.5/190	2	
														2318	10/190	1	
														22318 C	10/190	1	
SN 319	95	110	170	125	410	120	350	45	24	77	32	26	20.5	1319	16/200	2	FS 460
														21319	16/200	2	
														2319	10/200	1	
														22319 C	10/200	1	
SN 320	100	115	175	140	410	120	350	45	24	83	32	26	22.8	1320	18/215	2	FS 460
														21320	18/215	2	
														2320	10/215	1	
														22320 C	10/215	1	
SN 322	110	125	190	150	450	130	390	50	24	90	35	28	28.9	21322	20/240	2	FS 510
														22322 C	10/240	1	
SN 324	120	135	200	160	530	160	450	60	30	96	42	35	35.8	20324	20.5/260	2	FS 510
														22324 C	10/260	1	
SN 326	130	150	210	170	550	160	470	60	30	103	42	35	50.5	20326	22.5/280	2	FS 680
														22326 C	10/280	1	
SN 328	140	160	235	180	620	170	520	65	30	112	42	35	81.0	20328	25/300	2	FS 680
														22328 C	10/300	1	
SN 330	150	170	245	190	650	180	560	65	30	118	42	35	92.0	20330	26.5/320	2	FS 680
														22330 C	10/320	1	
SN 332	160	180	255	200	680	190	580	70	36	124	50	42	100.0	20332	28/340	2	FS 680
														22332 C	10/340	1	

Masta®
PRECISION HOUSINGS

Plummer Blocks Housing for Spherical Roller Bearing with Adapter Sleeve of Series 230 and 231

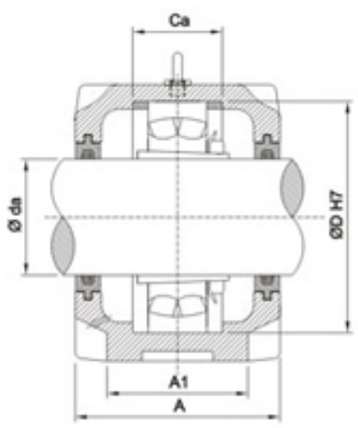

Section 'AA'

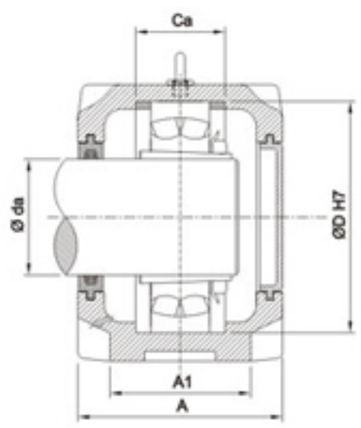

Section 'AA'

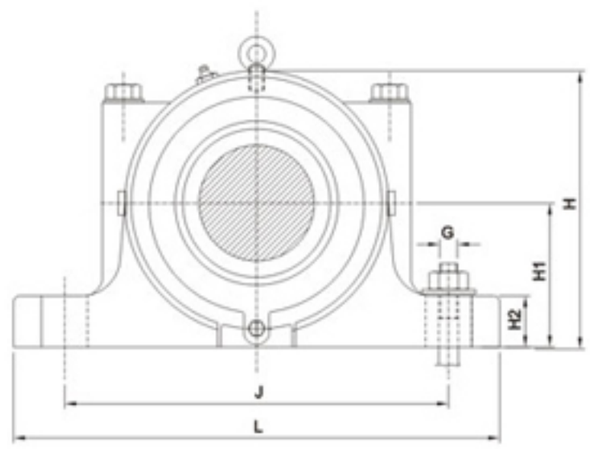

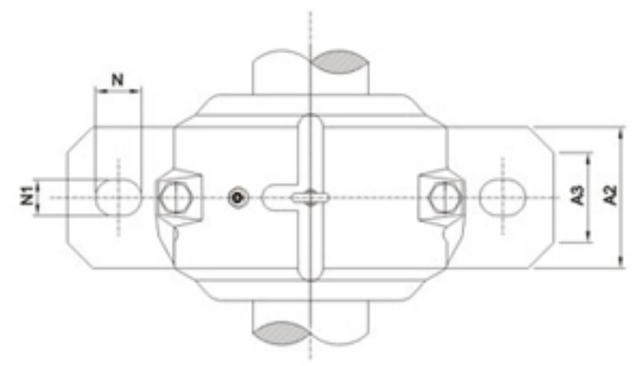

Plummer Block Designation	Shaft dia	DIMENSION IN MM													Approx Weight kg.	Appropriate Bearing + Adapter Sleeve	Locating Rings Sz. 1No. per pl. block	Optional	
	da	L	J	H2	H1	H	A	A1	A2	A3	Ca	N	N1	G				Felt Strip	Rubber Oil Seal No.
SN 3024	110	380	320	40	112	215	150	110	100	75	56	36	28	24	20.5	23024CCK+H3024	10/180	FS 460	ZF 24
SN 3026	115	410	350	45	125	239	160	120	110	80	62	36	28	24	24.5	23026CCK+H3026	10/200	FS 460	ZF 26
SN 3028	125	410	350	45	140	260	170	120	110	80	63	36	28	24	30.5	23028CCK+H3028	10/210	FS 510	ZF 28
SN 3030	135	445	380	50	150	286	180	130	115	85	66	36	28	24	40.6	23030CCK+H3030	10/225	FS 510	ZF 30
SN 3032	140	460	390	50	150	297	190	130	115	85	70	36	28	24	41.8	23032CCK+H3032	10/240	FS 680	ZF 32
SN 3034	150	530	450	60	160	318	205	160	145	100	77	48	35	30	55.8	23034CCK+H3034	10/260	FS 680	ZF34
SN 3036	160	550	470	60	170	338	210	160	150	105	84	48	35	30	62.6	23036CCK+H3036	10/280	FS 680	ZF 36
SN 3038	170	550	470	60	170	346	220	160	150	105	85	48	35	30	70.8	23038CCK+H3038	10/290	FS 680	ZF 38
SN 3040	180	610	515	60	180	366	235	170	160	110	92	48	35	30	81.0	23040CCK+H3040	10/310	FS 680	ZF 40
SN 3044	200	690	580	70	200	401	255	190	170	115	100	50	42	36	106.0	23044CCK+H3044	10/340	FS 950	ZF 44
SN 3048	220	720	610	75	210	422	265	200	190	130	102	50	42	36	126	23048CCK+H3048	10/360	FS 950	ZF 48
SN 3052	240	820	680	80	240	472	285	220	200	130	114	70	48	42	161	23052CCK+H3052	10/400	FS 1120	ZF 52
SN 3056	260	860	720	80	250	495	295	230	210	140	116	70	48	42	182	23056CCK+H3056	10/420	FS 1120	ZF 56
SN 3122	100	380	320	40	112	217	150	110			66	36	28	24	20.5	23122K+H3122	10/180	FS 390	ZF 22
SN 3124	110	410	350	45	125	240	165	120			72	36	28	24	24.5	23124K+H3124	10/200	FS 460	ZF 24
SN 3126	115	410	350	45	140	260	170	120			74	36	28	24	30.5	23126K+H3126	10/210	FS 460	ZF26
SN 3128	125	445	380	50	150	286	180	130			78	36	28	24	40.6	23128K+H3128	10/225	FS 510	ZF 28
SN 3130	135	500	420	50	150	295	200	150			90	48	35	30	41.8	23130K+H3130	10/250	FS 510	ZF 30
SN 3132	140	530	450	60	160	318	215	160			96	48	35	30	55.8	23132K+H3132	10/270	FS 680	ZF 32
SN 3134	150	550	470	60	170	330	220	160			98	48	35	30	62.6	23134K+H3134	10/280	FS 680	ZF 34
SN 3136	160	610	520	70	180	355	230	170			106	48	35	30	70.8	23136K+H 3136	10/300	FS 680	ZF 36
SN 3138	170	650	560	70	190	375	240	180			114	48	35	30	81.0	23138K+H3138	10/320	FS 680	ZF 38

SHAFT SEALS - Rubber seals (ZF) or Labyrinth seals are supplied on order.

Masta®
PRECISION HOUSINGS

Illustration for SNA Series

"MASTA" SNA Series horizontally split plummer blocks (bearing housings) are completely interchangeable with earlier SN type plummer block, concerning mainly to its centre height, foundation bolt centers. Same bearing housings can be used for 500 and 600 series bearings having equal bearing outside diameter by changing its shaft seals, e.g. SNA 506 plummer blocks can be used as SNA 605 also where bearing O.D of 1206 K and 1305 K are equal e.g. 52mm. Similarly same plummer blocks can be used for bearing with tapered bore mounted with adapter sleeve or bearing with (straight) cylindrical bore. However such plummer blocks are designated as SNA 500 and SNA 600 for bearings with adapter sleeves and SNA 200 & SNA 300 for bearings with cylindrical bores. Bearing seating width provides axial freedom which can be made axially located by insertion of suitable locating rings.

SNA plummer blocks are supplied with felt seals (designated and suffixed as TC) Rubber V Ring seals (TA) and One Ring and One end cover (ATA). These plummer blocks can also be supplied with Double lip seals (TG) or labyrinth seals (TS) on order.

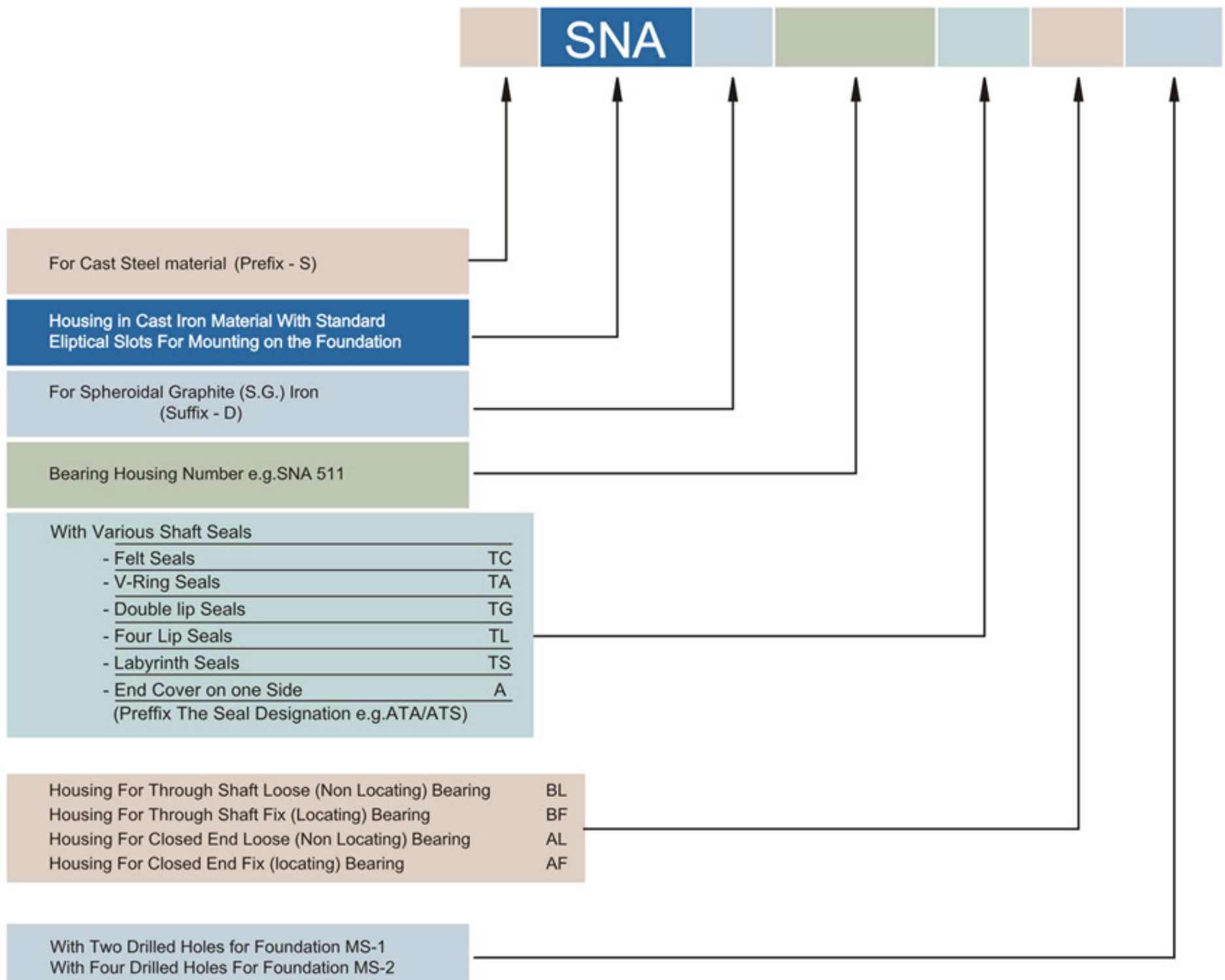

SNA 511 TS BF

S SNA D 515 ATA AL MS-2

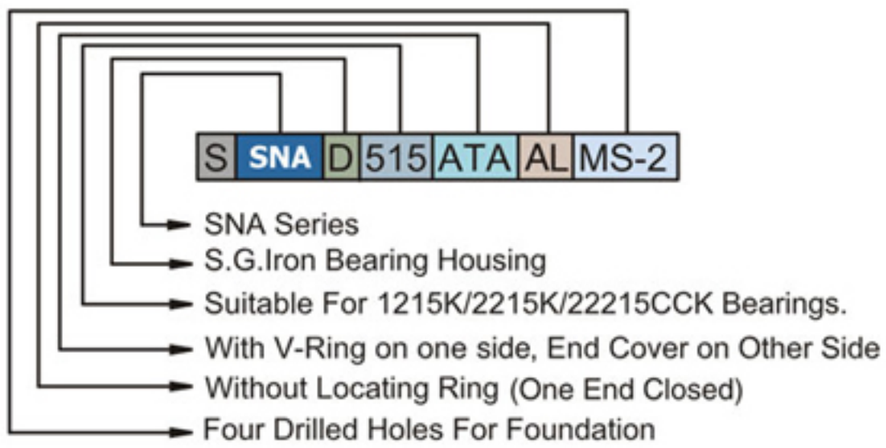

Masta®
PRECISION HOUSINGS

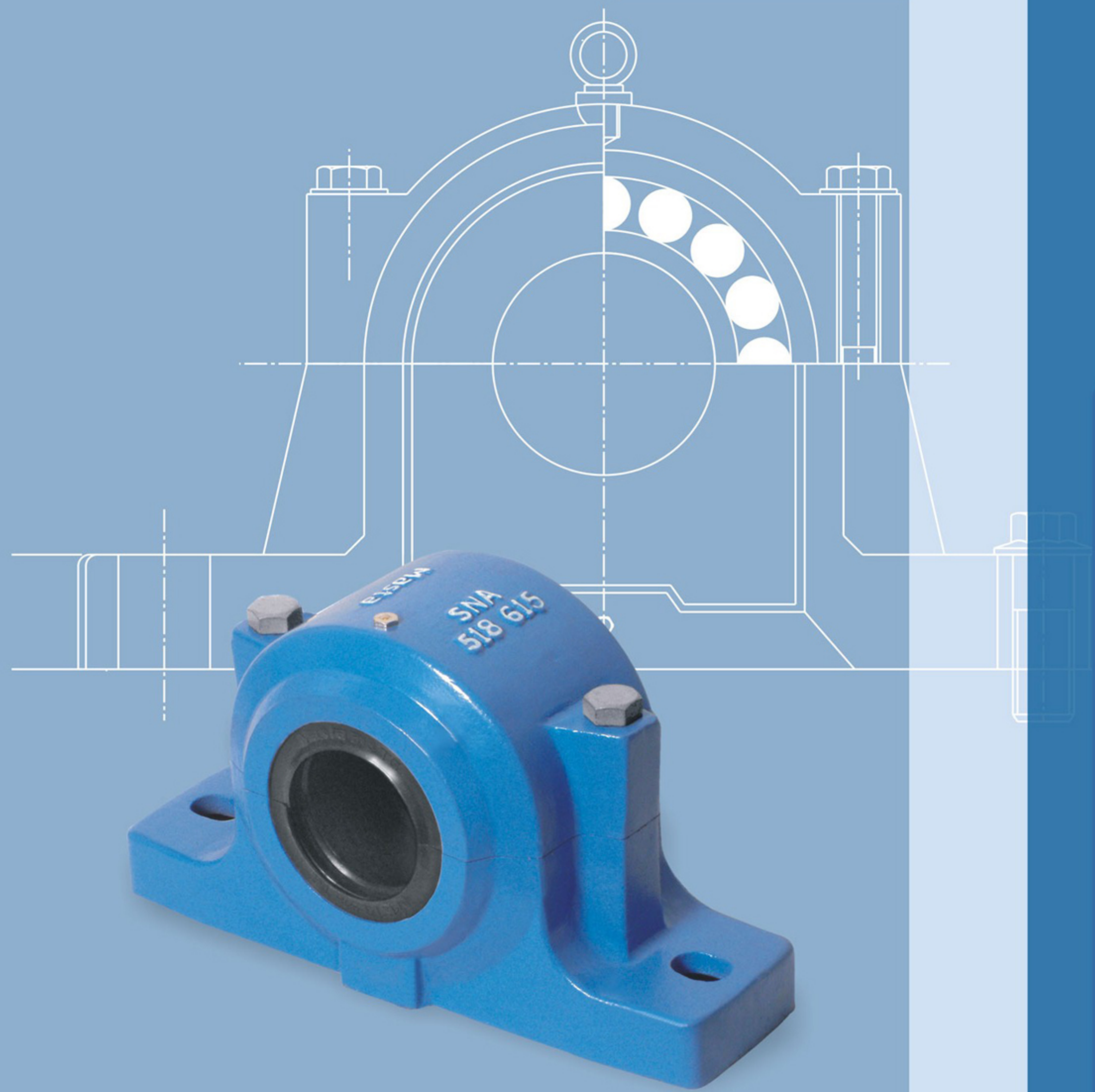

SNA Series

Plummer Blocks (Bearing housings)
Series SNA 500 / 600 for bearings with adapter sleeves

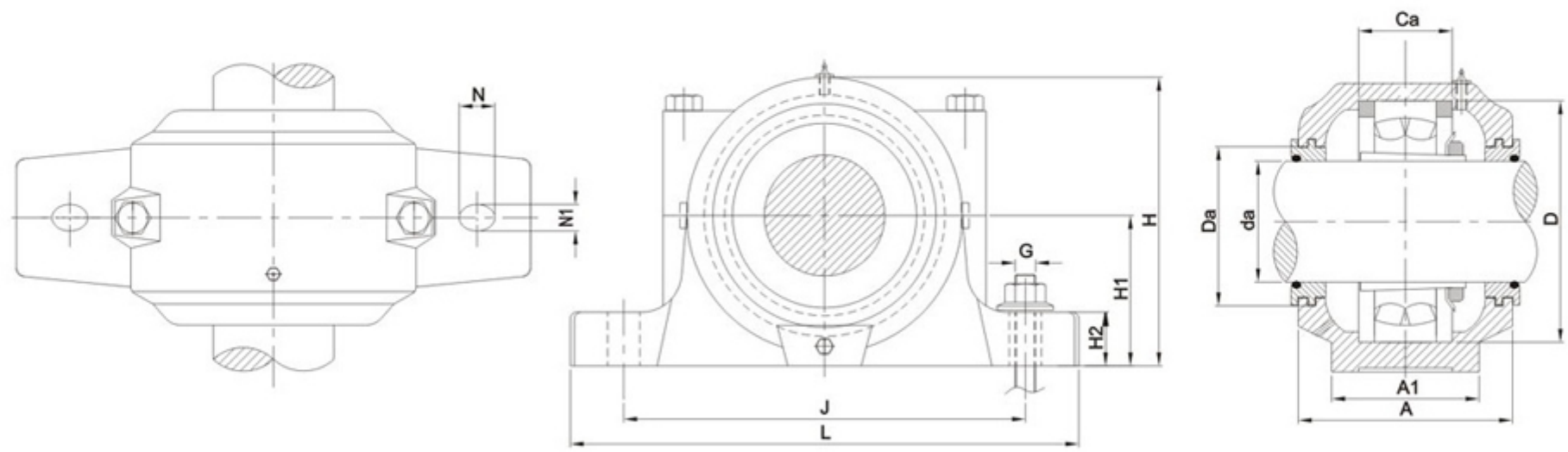

Plummer Block Designation	Shaft dia da mm	DIMENSION IN MM												Approx Weight kg.	Bearing with Adapter Sleeve	Locating Rings	No.
		A	A1	Da	H	H1	H2	J	L	Ca	N	N1	G				
SNA 505	20	67	46	31.5	71	40	19	130	165	25	20	13	10	1.4	1205 K + H 205	5/52	2
															2205 K + H 305	7/52	1
SNA 506	25	77	52	36.5	87	50	22	150	185	32	22	13	10	1.95	1206 K + H 206	8/62	2
															2206 K + H 306	6/62	2
SNA 605	20														1305 K + H 305	7.5/62	2
															2305 K + H 2305	8/62	1
SNA 507	30	82	52	46.5	92	50	22	150	185	34	20	13	10	2.2	1207 K + H 207	8.5/72	2
															2207 K + H 307	5.5/72	2
															22207 CK + H 307	5.5/72	2
SNA 606	25														1306 K + H 306	7.5/72	2
															2306 K + H 2306	7/72	1
SNA 508	35	85	60	51.5	106	60	25	170	205	39	20	15	12	2.65	1208 K + H 208	10.5/80	2
															2208 K + H 308	8/80	2
															22208 CK + H 308	8/80	2
SNA 607	30														1307 K + H 307	9/80	2
															2307 K + H 2307	8/80	1
SNA 509	40	85	60	56.5	109	60	25	170	205	30	20	15	12	2.8	1209 K + H 209	5.5/85	2
															2209 K + H 309	7/85	1
															22209 CK + H 309	7/85	1
SNA 510	45	90	60	62	112	60	25	170	205	41	20	15	12	3.00	1210 K + H 210	10.5/90	2
															2210 K + H 310	9/90	2
															22210 CK + H 310	9/90	2
SNA 608	35														1308 K + H 308	9/90	2
															2308 K + H 2308	8/90	1
															21308 K + H 308	9/90	2
															22308 CK + H 2308	8/90	1
SNA 511	50	95	70	67	127	70	28	210	255	44	23	18	16	4.5	1211 K + H 211	11.5/100	2
															2211 K + H 311	9.5/100	2
															22211 CK + H 311	9.5/100	2
SNA 609	40														1309 K + H 309	9.5/100	2
															2309 K + H 2309	8/100	1
															21309 K + H 309	9.5/100	2
															22309 CK + H 2309	8/100	1

Masta®
PRECISION HOUSINGS

Plummer Blocks (Bearing housings) Series SNA 500 / 600 for bearings with adapter sleeves

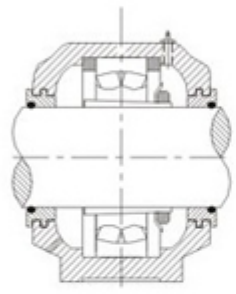

TS Type Design
Laby Rinth Collar

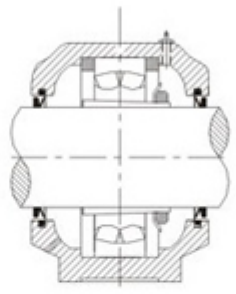

TA Type Design
V-Ring with GI Lip
Waser

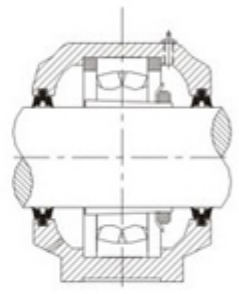

TG Type Design
Double Lip Seal

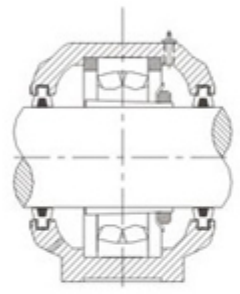

TC Type Design
Felt Collar

with Locating Ring
Locating / Fix Type

without Locating Ring
Floating / Loose Type

* Plummer Blocks 524 / 620 and above only are Supplied with eye bolt

Plummer Block Designation	Shaft dia da mm	DIMENSION IN MM												Approx Weight kg.	Bearing with Adapter Sleeve	Locating Rings	No.
		A	A1	Da	H	H1	H2	J	L	Ca	N	N1	G				
SNA 512	55	105	70	72	133	70	30	210	255	48	23	18	16	4.9	1212 K + H 212	13/110	2
															2212 K + H 312	10/110	2
															22212 CK+ H 312	10/110	2
SNA 610	45														1310 K + H 310	10.5/110	2
															2310 K + H 2310	8/110	1
															21310 K + H 310	10.5/110	2
															22310 K + H 2310	8/110	1
SNA 513	60	110	80	77	148	80	30	230	275	51	24	18	16	5.8	1213 K + H 213	14/120	2
															2213 K + H 313	10/120	2
															22213 CK+ H 313	10/120	2
SNA 611	50														1311 K + H 311	11/120	2
															2311 K + H 2311	8/120	1
															21311 K + H 311	11/120	2
															22311 K + H 2311	8/120	1
SNA 515	65	115	80	87	154	80	30	230	280	56	26	18	16	6.5	1215 K + H 215	15.5/130	2
															2215 K + H 315	12.5/130	2
															22215 CK+ H 315	12.5/130	2
SNA 612	55														1312 K + H 312	12.5/130	2
															2312 K + H 2312	10/130	1
															21312 CK+ H 312	12.5/130	2
															22312 CK+ H 2312	10/130	1
SNA 516	70	120	90	92.5	175	95	32	260	315	58	29	22	20	9.5	1216 K + H 216	16/140	2
															2216 K + H 316	12.5/140	2
															22216 CK+ H 316	12.5/140	2
SNA 613	60														1313 K + H 313	12.5/140	2
															2313 K + H 2313	10/140	1
															21313 CK + H 313	12.5/140	2
															22313 CK + H 2313	10/140	1
SNA 517	75	125	90	97.5	181	95	32	260	320	61	30	22	20	10.0	1217 K + H 217	16.5/150	2
															2217 K + H 317	12.5/150	2
															22217 CK+ H 317	12.5/150	2
SNA 518	80	140	100	102.5	192	100	35	290	345	65	27	22	20	12.8	1218 K + H 218	17.5/160	2
															2218 K + H 318	12.5/160	2
															22218 CK+ H 318	12.5/160	2
															23218 CK+ H 2318	12.5/160	1
SNA 615	65														1315 K + H 315	14/160	2
															2315 K + H 2315	10/160	1
															21315 K + H 315	14/160	2
															22315 K + H 2315	10/160	1

Masta®
PRECISION HOUSINGS

SNA 500 & 600 Series

Plummer Blocks (Bearing housings) Series SNA 500 / 600 for bearings with adapter sleeves

Plummer Block SNA 524 / 620 and above are supplied with eye bolt on cap

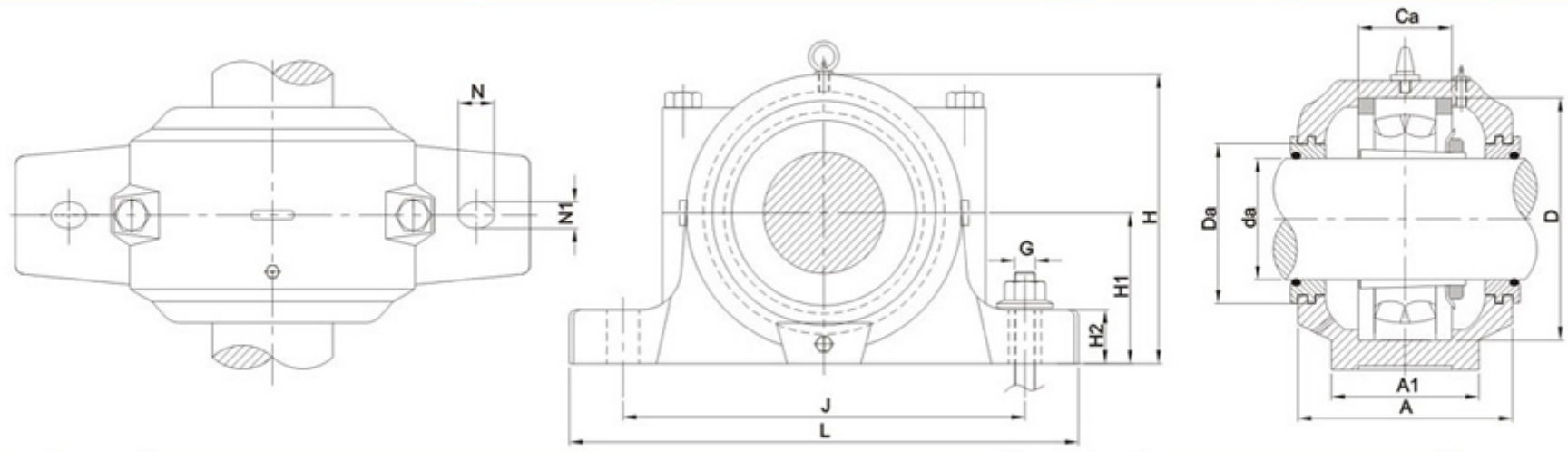

Plummer Block Designation	Shaft dia da mm	DIMENSION IN MM												Approx Weight kg.	Bearing with Adapter Sleeve	Locating Rings	No.
		A	A1	Da	H	H1	H2	J	L	Ca	N	N1	G				
SNA 519	85	145	100	131	209	112	35	290	345	68	27	22	20	14.5	1219 K + H 219	18/170	2
															2219 K + H 319	12.5/170	2
															22219 CK+ H 319	12.5/170	2
SNA 616	70														1316 K + H 316	14.5/170	2
															2316 K + H 2316	10/170	1
															21316 K + H 316	14.5/170	2
															22316 K + H 2316	10/170	1
SNA 520	90	160	110	137.5	215	112	40	320	380	70	32	26	24	17.5	1220 K + H 220	18/180	2
															2220 K + H 320	12/180	2
															22220 CK+ H 320	12/180	2
															23220 CK+ H 2320	9.7/180	1
SNA 617	75														1317 K + H 317	14.5/180	2
															2317 K + H 2317	10/180	1
															21317 K + H 317	14.5/180	2
															22317 K + H 2317	10/180	1
SNA 522	100	175	120	147.5	239	125	45	350	410	80	32	26	24	22	1222 K + H 222	21/200	2
															2222 K + H 322	13.5/200	2
															22222 CK+ H 322	13.5/200	2
															23222 CK+ H 2322	10/200	1
SNA 619	85														22319 CK+ H 2319	13/200	1
SNA 524	110	185	120	157.5	271	140	45	350	410	86	32	26	24	25.0	22224 CK+ H 3124	14/215	2
															23224 CK+ H 2324	10/215	1
SNA 620	90														22320 CK+ H 2320	13/215	1
SNA 526	115	190	130	167.5	290	150	50	380	445	90	35	28	24	33.0	22226 CK+ H 3126	13/230	2
															23226 CK+ H 2326	10/230	1
SNA 528	125	205	150	177.5	302	150	50	420	500	98	42	35	30	43.0	22228 CK+ H 3128	15/250	2
															23228 CK+ H 2328	10/250	1
SNA 530	135	220	160	192.5	323	160	60	450	530	106	42	35	30	51.0	22230 CK+ H 3130	16.5/270	2
															23230 CK+ H 2330	10/270	1
SNA 532	140	235	160	202.5	344	170	60	470	550	114	42	35	30	58	22232 CK+ H 3132	17/290	2
															23232 CK+ H 2332	10/290	1

Masta® PRECISION HOUSINGS

SSNAD Series
Plummer Blocks with Drilled Holes in Base

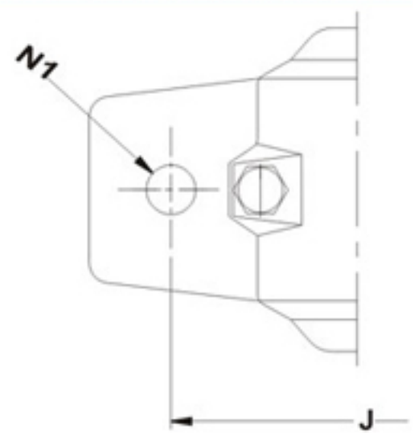

(MS 1)

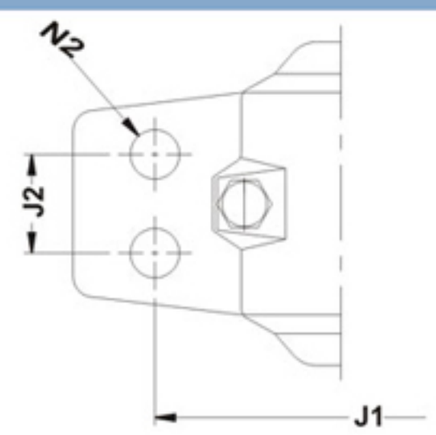

(MS 2)

Housing Designation	MS-1			MS-2			
	Dimension for Two Hole Base		Suitable Bolt Size	Dimension For Four Hole Base			Suitable Bolt Size
	J	N1		J1	J2	N2	
SSNAD 511-609	210	18	M 16	200	35	13	M 12
SSNAD 512-610	210	18	M 16	200	35	13	M 12
SSNAD 513-611	230	18	M 16	220	40	13	M 12
SSNAD 515-612	230	18	M 16	220	40	13	M 12
SSNAD 516-613	260	22	M 20	250	50	13	M 12
SSNAD 517-614	260	22	M 20	250	50	13	M 12
SSNAD 518-615	290	22	M 20	280	50	18	M 16
SSNAD 519-616	290	22	M 20	280	50	18	M 16
SSNAD 520-617	320	26	M 24	300	60	18	M 16
SSNAD 522-619	350	26	M 24	320	70	18	M 16
SSNAD 524-620	350	26	M 24	330	70	18	M 16
SSNAD 526	380	28	M 24	370	70	22	M 20
SSNAD 528	420	35	M 30	400	80	26	M 24
SSNAD 530	450	35	M 30	430	90	26	M 24
SSNAD 532	470	35	M 30	450	90	26	M 24

REST OF THE DIMENSIONS SHALL BE AS PER SNA SERIES

Masta®
PRECISION HOUSINGS

Illustration For SNH Series

"MASTA" SNH series plummer blocks are also horizontally split and are fully interchangeable with those of earlier SN and SNA series plummer blocks.

All features of standard and special shaft seals, interchangeability with 500 and 600 series for bearing with tapered bore and adapter mounting or with (straight) cylindrical bore etc. are available in SHN series plummer blocks also. Its more favorable cross section and improved design have resulted into greater strength as compared to SN or SNA series Plummer Blocks.

SNH plummer blocks have dowel pins at its mating surface to ensure correct assembly of base and cap. The bases and caps are not interchangeable. Like SNA series, the plummer blocks of SNH series are also supplied with standard shaft seals e.g. Felt seals {TC}or V Rings (TA) or V Ring on one end and End Cover on other end (ATA.) Special shaft seals such as Labyrinth seals (TS) or double lip seals (TG), taconite seals (ND) can also be supplied against orders.

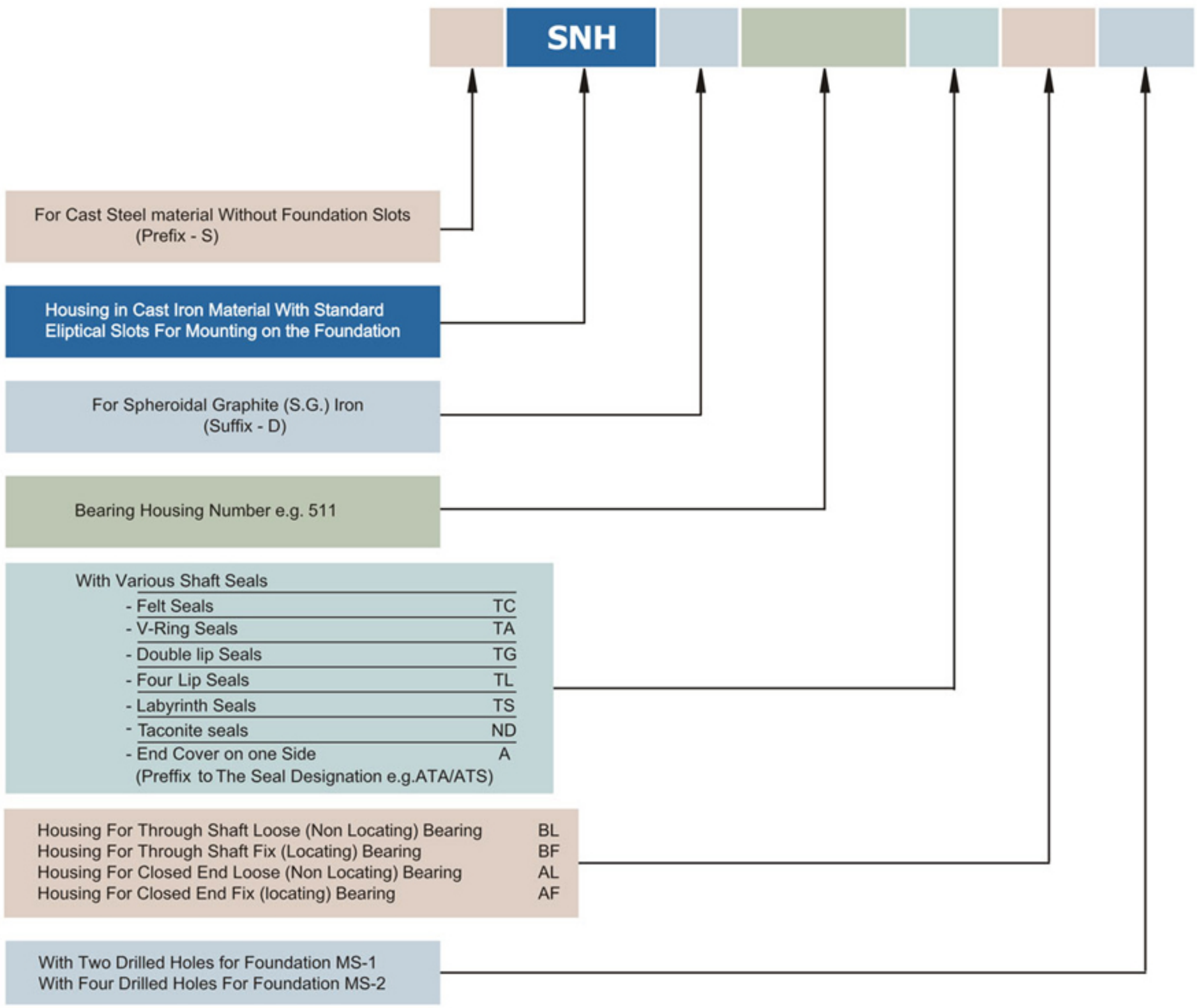

SNH 511 TS BF

S SNH D 515 ATA BL MS-2

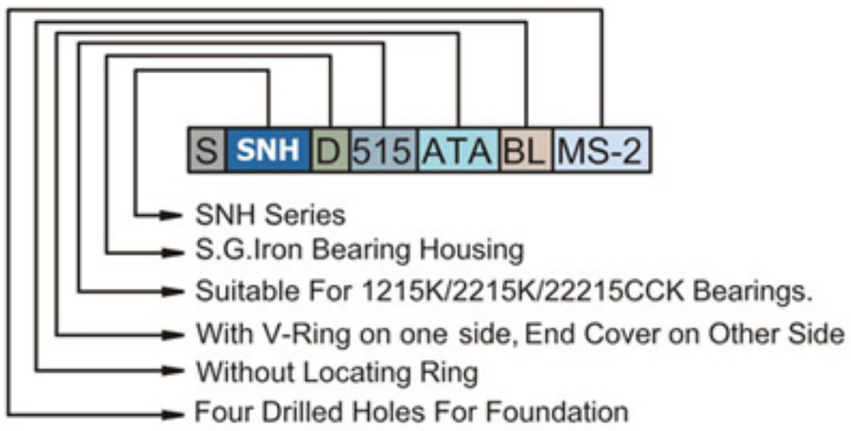

Masta®
PRECISION HOUSINGS

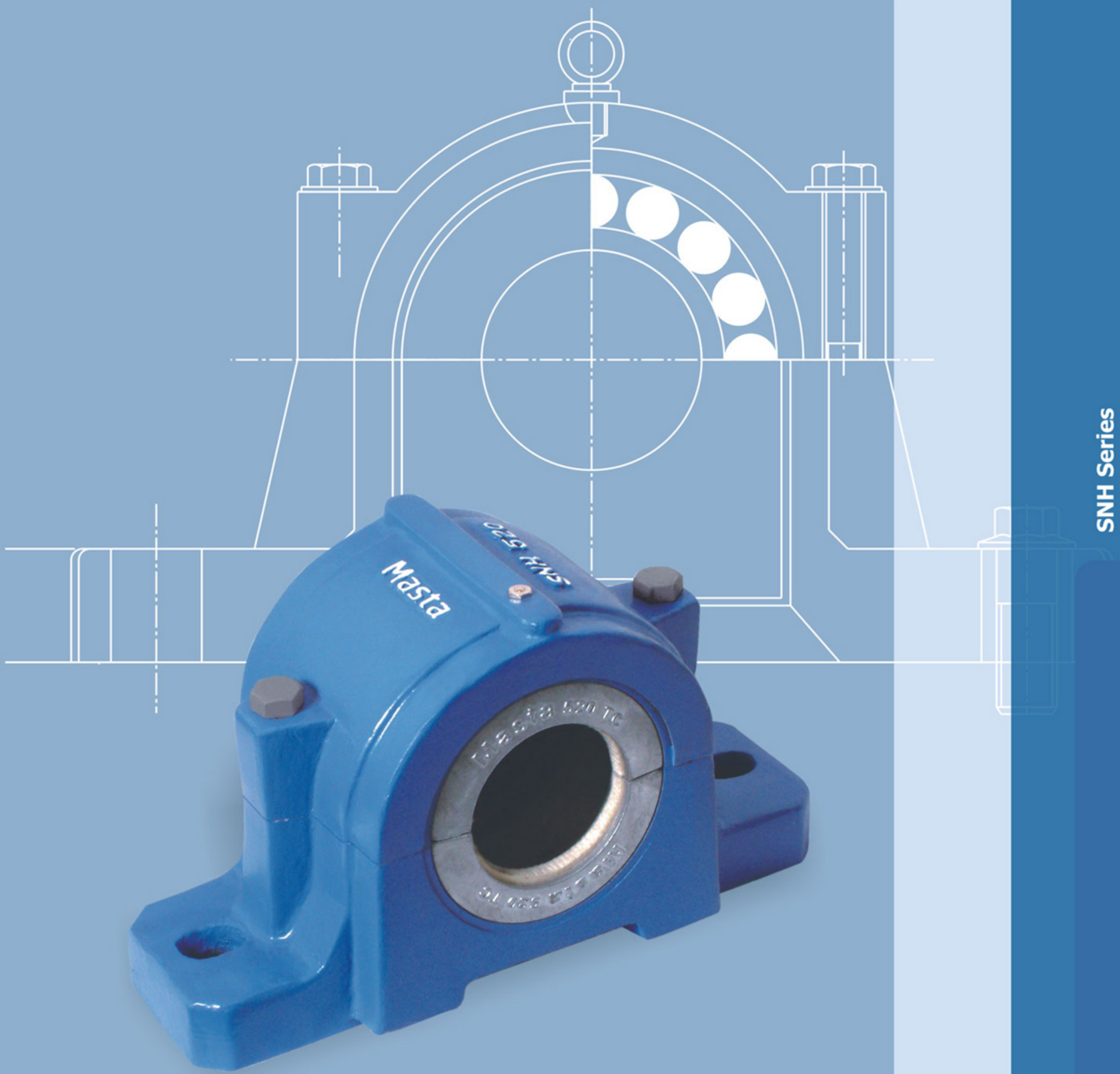

SNH Series

Plummer Blocks (Bearing housings)
Series SNH 500 / 600 for bearings with adapter sleeves

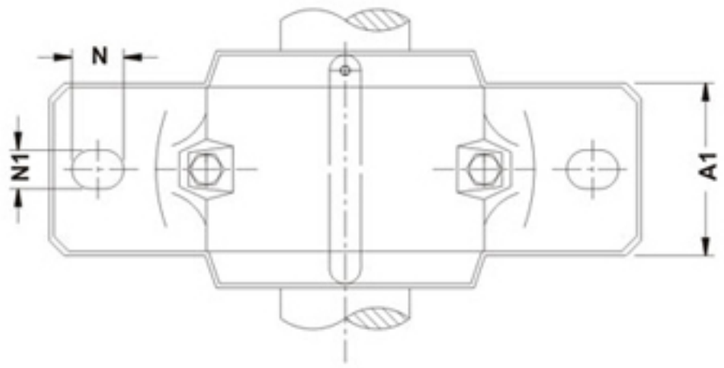

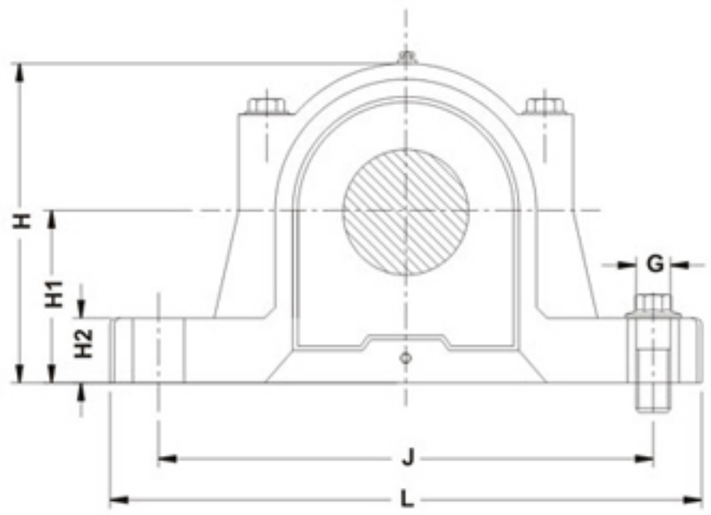

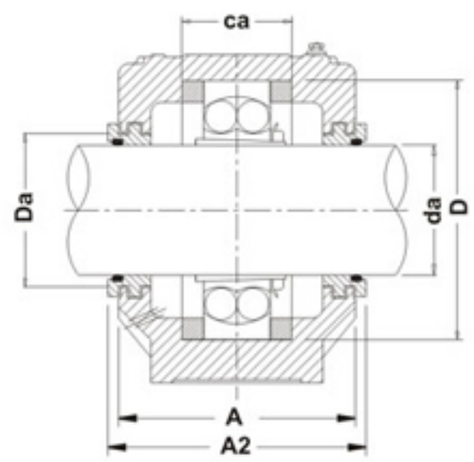

Plummer Block Designation	Shaft dia da mm	DIMENSION IN MM													Approx Weight kg.	Bearing with Adapter Sleeve	Locating Ring Size / Two Nos.
		A	A1	A2	Da	H	H1	H2	J	L	Ca	N	N1	G			
SNH 505	20	67	46	80	31.5	74	40	19	130	165	25	20	15	12	1.5	1205 EK + H 205	5/52
																2205 EK + H 305	3.5/52
																22205 EK + H 305	3.5/52
SNH 506	25	77	52	89	36.5	89	50	22	150	185	32	20	15	12	2.2	1206 EK + H 206	8/62
																2206 EK + H 306	6/62
																22206 EK+ H 306	6/62
SNH 605	20															1305 EK + H 305	7.5/62
																2305 EK + H 2305	4/62
SNH 507	30	82	52	94	46.5	93	50	22	150	185	34	20	15	12	2.4	1207 EK + H 207	8.5/72
																2207 EK + H 307	5.5/72
																22207 EK+ H 307	5.5/72
SNH 606	25															1306 EK + H 306	7.5/72
																2306 EK + H 2306	3.5/72
SNH 508	35	85	60	97	51.5	107	60	25	170	205	39	20	15	12	3.0	1208 EK + H 208	10.5/80
																2208 EK + H 308	8/80
																22208 EK+ H 308	8/80
SNH 607	30															1307 EK + H 307	9/80
																2307 EK + H 2307	4/80
SNH 509	40	85	60	97	56.5	109	60	25	170	205	30	20	15	12	3.0	1209 EK + H 209	5.5/85
																2209 EK + H 309	3.5/85
																22209 EK+ H 309	3.5/85
SNH 510	45	90	60	102	62	113	60	25	170	205	41	20	15	12	3.3	1210 EK + H 210	10.5/90
																2210 EK + H 310	9/90
																22210 EK+ H 310	9/90
SNH 608	35															1308 EK + H 308	9/90
																2308 EK + H 2308	4/90
																21308 CCK+ H 308	9/90
																22308 EK+ H 2308	4/90
SNH 511	50	95	70	107	67	127	70	28	210	255	44	24	18	16	4.5	1211 EK + H 211	11.5/100
																2211 EK + H 311	9.5/100
																22211 EK+ H 311	9.5/100
SNH 609	40															1309 EK + H 309	9.5/100
																2309 EK + H 2309	4/100
																21309 CCK+ H 309	9.5/100
																22309 EK+ H 2309	4/100

Masta®
PRECISION HOUSINGS

Plummer Blocks (Bearing housings) Series SNH 500 / 600 for bearings with adapter sleeves

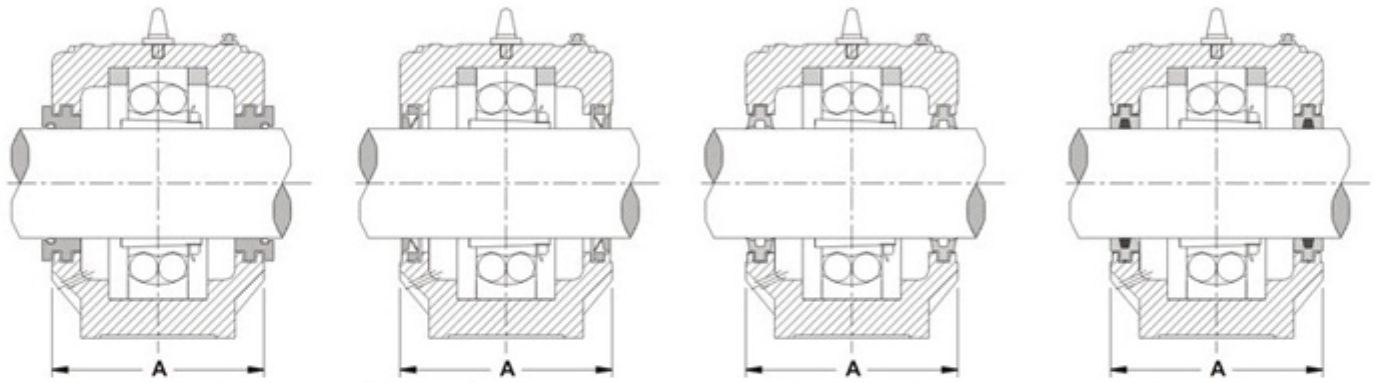

TS Type Design Labyrinth Collar

TA Type Design V-Ring with GI Lip Waser

TG Type Design Double Lip Seal

TC Type Design Felt Collar

with Locating Ring
Locating / Fix Type

without Locating Ring
Floating / Loose Type

Plummer Block Designation	Shaft dia da mm	DIMENSION IN MM													Approx Weight kg.	Bearing with Adapter Sleeve	Locating Rings
		A	A1	A2	Da	H	H1	H2	J	L	Ca	N	N1	G			
SNH 512	55	105	70	117	72	133	70	30	210	255	48	24	18	16	5.3	1212 EK + H 212	13/110
																2212 EK + H 312	10/110
																22212 EK+ H 312	10/110
SNH 610	45															1310 EK + H 310	10.5/110
																2310 EK + H 2310	4/110
																21310CCK + H 310	10.5/110
																22310 EK + H 2310	4/110
SNH 513	60	110	80	122	77	148	80	30	230	275	51	24	18	16	6.8	1213 EK + H 213	14/120
																2213 EK + H 313	10/120
																22213 EK+ H 313	10/120
SNH 611	50															1311 EK + H 311	11/120
																2311 EK + H 2311	4/120
																21311 CCK + H 311	11/120
																22311 EK+ H 2311	4/120
SNH 515	65	115	80	127	87	154	80	30	230	280	56	24	18	16	7.2	1215 EK + H 215	15.5/130
																2215 EK + H 315	12.5/130
																22215 EK+ H 315	12.5/130
SNH 612	55															1312 EK + H 312	12.5/130
																2312 EK + H 2312	5/130
																21312CCK + H 312	12.5/130
																22312 EK + H 2312	5/130
SNH 516	70	120	90	138	92.5	175	95	32	260	315	58	28	22	20	9.8	1216 EK + H 216	16/140
																2216 EK + H 316	12.5/140
																22216 EK+ H 316	12.5/140
SNH 613	60															1313 EK + H 313	12.5/140
																2313 EK + H 2313	5/140
																21313CCK+ H 313	12.5/140
																22313 EK+ H 2313	5/140
SNH 517	75	125	90	143	97.5	183	95	32	260	320	61	28	22	20	10.5	1217 EK + H 217	16.5/150
																2217 EK + H 317	12.5/150
																22217 EK+ H 317	12.5/150
SNH 518	80	140	100	158	102.5	193	100	35	290	345	65	28	22	20	12.7	1218 EK + H 218	17.5/160
																2218 EK + H 318	12.5/160
																22218 EK+ H 318	12.5/160
																23218CCK + H 2318	6.25/160
SNH 615	65															1315 K + H 315	14/160
																2315 EK + H 2315	5/160
																21315 CCK + H 315	14/160
																22315 EK + H 2315	5/160

SNH 500 & 600 Series

Plummer Blocks (Bearing housings) Series SNH 500 / 600 for bearings with adapter sleeves

Plummer Block SNH 524 / 620 and above are supplied with eye bolt on cap

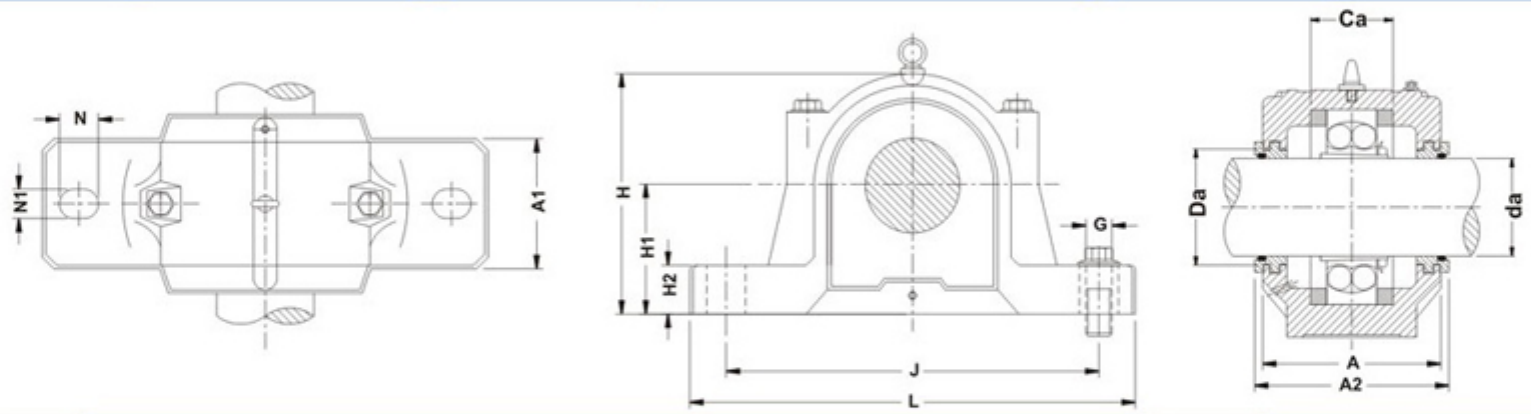

Plummer Block Designation	Shaft dia da mm	DIMENSION IN MM													Approx Weight kg.	Bearing with Adapter Sleeve	Locating Rings
		A	A1	A2	Da	H	H1	H2	J	L	Ca	N	N1	G			
SNH 519	85	145	100	163	131	210	112	35	290	345	68	28	22	20	14	1219 K + H 219	18/170
																2219 K + H 319	12.5/170
																22219 EK + H 319	12.5/170
SNH 616	70															1316 K + H 316	14.5/170
																2316 K + H 2316	5/170
																21316 CCK + H 316	14.5/170
																22316 EK+ H 2316	5/170
SNH 520	90	160	110	178	137.5	215	112	40	320	380	70	32	26	24	18.0	1220 K + H 220	18/180
																2220 K + H 320	12/180
																22220 EK + H 320	12/180
																23220 CCK + H 2320	4.85/180
SNH 617	75															1317 K + H 317	14.5/180
																2317 K + H 2317	5/180
																21317 CCK + H 317	14.5/180
																22317 EK+ H 2317	5/180
SNH 522	100	175	120	191	147.5	239	125	45	350	410	80	32	26	24	22.5	1222 K + H 222	21/200
																2222 K + H 322	13.5/200
																22222 EK + H 322	13.5/200
																23222 CCK + H 2322	5.1/200
SNH 619	85															1319 K + H 319	17.5/200
																2319 K + H 2319	6.5/200
																21319 CCK + H 319	17.5/200
																22319 EK + H 2319	6.5/200
SNH 524	110	185	120	199	157.5	271	140	45	350	410	86	32	26	24	26.5	1224 K + H 3124	22/215
																22224 EK + H 3124	14/215
																23224 CCK + H 2324	5/215
SNH 620	90															1320 EK + H 320	19.5/215
																2320 EK + H 2320	6.5/215
																21320 CCK + H 320	19.5/215
																22320 EK + H 2320	6.5/215
SNH 526	115	190	130	208	167.5	290	150	50	380	445	90	35	28	24	33.5	22226 EK + H 3126	13/230
																23226 CCK + H 2326	5/230
SNH 528	125	205	150	223	177.5	302	150	50	420	500	98	42	35	30	41	22228 CCK + H 3128	15/250
																23228 CCK + H 2328	5/250
SNH 530	135	220	160	241	192.5	323	160	60	450	530	106	42	35	30	50	22230 CCK + H 3130	16.5/270
																23230 CCK + H 2330	5/270
SNH 532	140	235	160	254	202.5	344	170	60	470	550	114	42	35	30	56.0	22232 CCK + H 3132	17/290
																23232 CCK + H 2332	5/290

Masta®
PRECISION HOUSINGS

SNH Plummer Block for Straight (Cylindrical) Bore Bearings

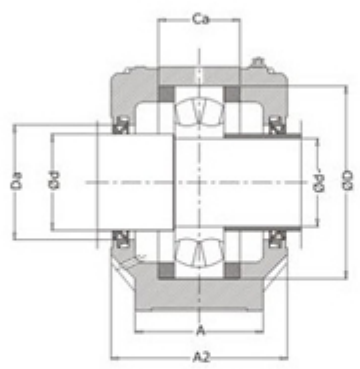

SECTION 'A-A'

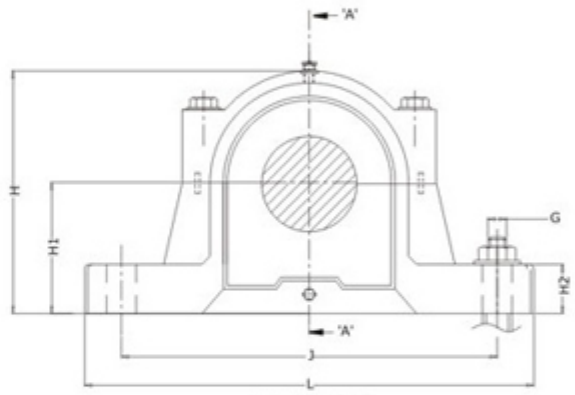

ELEVATION

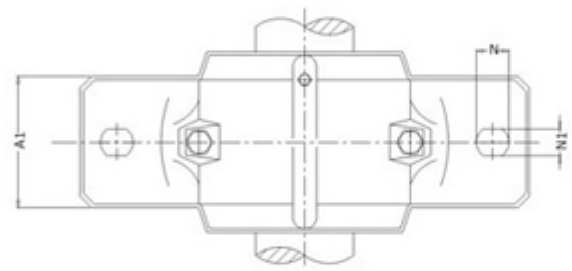

TOP VIEW

Plummer Block Designation	Shaft dia da		DIMENSION IN MM													Approx Weight kg.	Suitable For Bearing	Locating Ring size / Two Nos. per Housing
	da	db	A	A1	A2	Da	H	H1	H2	J	L	Ca	N	N1	G			
SNH 205	25	30	67	46	80	36.5	74	40	19	130	165	25	20	15	12	1.5	1205 E 2205 E 22205 E	5/52 3.5/52 3.5/52
SNH 206	30	35	77	52	89	46.5	89	50	22	150	185	32	20	15	12	2.2	1206 E 2206 E 22206 E	8/62 6/62 6/62
SNH 305	25	30															1305 E 2305 E 21305 CC	7.5/62 4/62 7.5/62
SNH 207	35	45	82	52	96	56.5	93	50	22	150	185	34	20	15	12	2.4	1207 E 2207 E 22207 CC	8.5/72 5.5/72 5.5/72
SNH 306	30	35															1306 E 2306 E 21306 CC	7.5/72 3.5/72 7.5/72
SNH 208	40	50	85	60	99	62	107	60	25	170	205	39	20	15	12	3.0	1208 E 2208 E 22208 CC	10.5/80 8/80 8/80
SNH 307	35	45															1307 E 2307 E 21307 CC	9/80 4/80 9/80
SNH 209	45	55	85	60	97	67	109	60	25	170	205	30	20	15	12	3.0	1209 E 2209 E 22209 CC	5.5/85 3.5/85 3.5/85
SNH 210	50	60	90	60	102	72	113	60	25	170	205	41	20	15	12	3.3	1210 E 2210 E 22210 CC	10.5/90 9/90 9/90
SNH 308	40	50															1308 E 2308 E 21308CC 22308 E	9/90 4/90 9/90 4/90
SNH 211	55	65	95	70	107	77	127	70	28	210	255	44	24	18	16	4.5	1211 E 2211 E 22211 CC	11.5/100 9.5/100 9.5/100
SNH 309	45	55															1309 E 2309 E 21309CC 22309 CC	9.5/100 4/100 9.5/100 4/100

Masta®
PRECISION HOUSINGS

SNH 200 & 300 Series

SNH Plummer Block Housing for Straight (Cylindrical) Bore Bearings

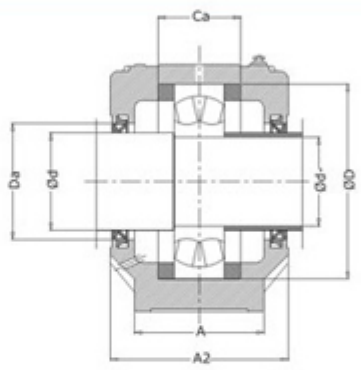

SECTION 'A-A'

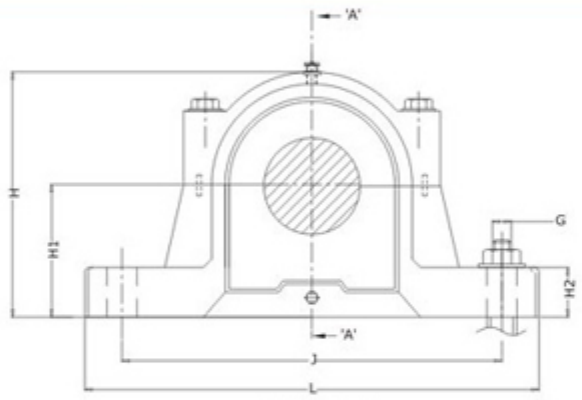

ELEVATION

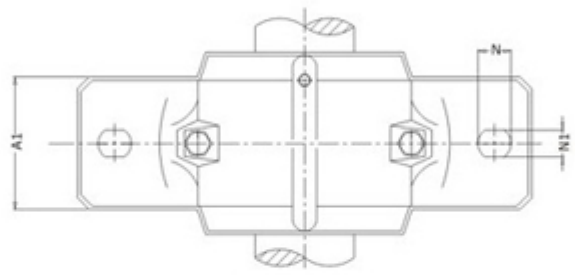

TOP VIEW

Plummer Block Designation	Shaft dia da		DIMENSION IN MM													Approx Weight kg.	Suitable For Bearing	Locating Ring size / Two Nos. per Housing
	da	db	A	A1	A2	Da	H	H1	H2	J	L	Ca	N	N1	G			
SNH 212	60	70	105	70	117	87	133	70	30	210	255	48	24	18	16	5.3	1212 E 2212 E 22212 E	13/110 10/110 10/110
SNH 310	50	60															1310 E 2310 E 21310 CC 22310 E	10.5/110 4/110 10.5/110 4/110
SNH 213	65	75	110	80	122	92.5	148	80	30	230	275	51	24	18	16	6.8	1213 E 2213 E 22213 E	14/120 10/120 10/120
SNH 311	55	65															1311 E 2311 E 21311 CC 22311 E	11/120 4/120 11/120 4/120
SNH 215	75	85	115	80	127	102.5	154	80	30	230	280	56	24	18	16	7.2	1215 E 2215 E 22215 E	15.5/130 12.5/130 12.5/130
SNH 312	60	70															1312 E 2312 E 21312 CC 22312 E	12.5/130 5/130 12.5/130 5/130
SNH 216	80	90	120	90	138	108	175	95	32	260	315	58	28	22	20	9.8	1216 E 2216 E 22216 E	16/140 12.5/140 12.5/140
SNH 313	65	75															1313 E 2313 E 21313 CC 22313 E	12.5/140 5/140 12.5/140 5/140
SNH 217	85	95	125	90	143	112	183	95	32	260	320	61	28	22	20	10.5	1217 E 2217 E 22217 E	16.5/150 12.5/150 12.5/150
SNH 314	70	80															1314 E 2314 E 21314 CC 22314 E	13/150 5/150 13/150 5/150
SNH 218	90	100	140	100	158	120	193	100	35	290	345	65	28	22	20	12.7	1218 E 2218 E 22218 E 23218 CC	17.5/160 12.5/160 12.5/160 6.25/160
SNH 315	75	85															1315 E 2315 E 21315 CC 22315 E	14/160 5/160 14/160 5/160

SNH 200 & 300 Series

Masta®
PRECISION HOUSINGS

SNH Plummer Block Housing for Straight (Cylindrical) Bore Bearings

Plummer Block SNH 224 / 320 and above are supplied with eye bolt on Top cap.

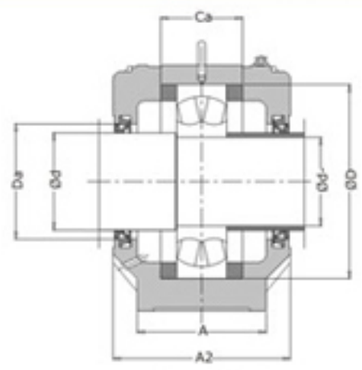

SECTION 'A-A'

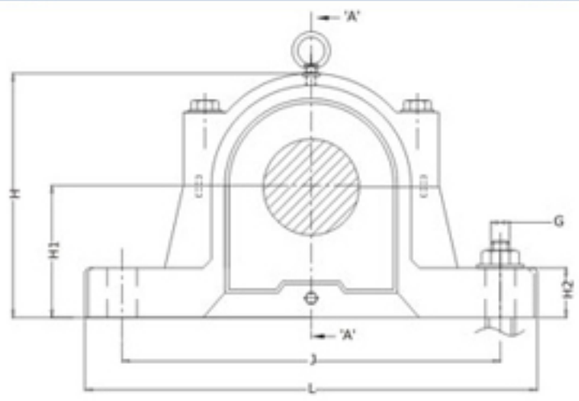

ELEVATION

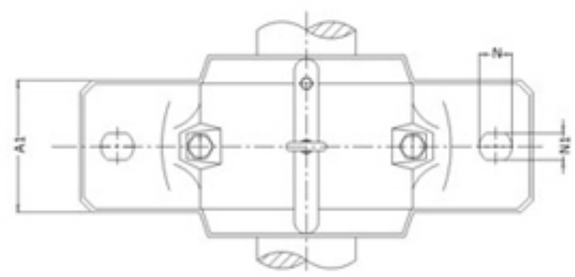

TOP VIEW

Plummer Block Designation	Shaft dia da		DIMENSION IN MM													Approx Weight kg.	Suitable For Bearing	Locating Ring size / Two Nos. per Housing
	da	db	A	A1	A2	Da	H	H1	H2	J	L	Ca	N	N1	G			
SNH 219	95	110	145	100	163	131	210	112	35	290	345	68	28	22	20	13.9	1219 E 2219 E 22219 E	18/170 12.5/170 12.5/170
SNH 316	80	90															1316 E 2316 E 21316CC 22316 E	14.5/170 5/170 14.5/170 5/170
SNH 220	100	115	160	110	178	137.5	215	112	40	320	380	70	32	26	24	18.0	1220 E 2220 E 22220 E 23220CC	18/180 12/180 12/180 4.85/180
SNH 317	85	95															1317 E 2317 E 21317CC 22317 E	14.5/180 5/180 14.5/180 5/180
SNH 222	110	125	175	120	191	147.5	239	125	45	350	410	80	32	26	24	22.5	1222 E 2222 E 22222 E 23222CC	21/200 13.5/200 13.5/200 5.1/200
SNH 319	95	110															1319 E 2319 E 21319CC 22319 E	17.5/200 6.5/200 17.5/200 6.5/200
SNH 224	120	135	185	120	199	157.5	271	140	45	350	410	86	32	26	24	26.5	1224 E 22224 E 23224CC	22/215 14/215 5/215
SNH 320	100	115															1320 E 2320 E 21320CC 22320 E	19.5/215 6.5/215 19.5/215 6.5/215
SNH 226	130	145	190	130	208	167.5	290	150	50	380	445	90	35	28	24	33.5	1226 E 22226 E 23226CC	22/230 13/230 5/230
SNH 228	140	155	205	150	223	177.5	302	150	50	420	500	98	42	35	30	40.8	22228CC 23228CC	15/250 5/250
SNH 230	150	165	220	160	241	192.5	323	160	60	450	530	106	42	35	30	49.8	22230CC 23230CC	16.5/270 5/270
SNH 232	160	175	235	160	254	202.5	344	170	60	470	550	114	42	35	30	56.0	22232CC 23232CC	17/290 5/290

Illustration for MNL Series

MNL Plummer block housings are suitable for self aligning ball bearings, spherical roller bearings and CARB bearings for shaft dia 20 to 160 mm. These housings are split type with 2 elliptical holes in housing base and suitable for grease or oil lubrication. For Grease lubrication variety of seals such as felt seals (TC Type), Labyrinth Seals (TS Type), Double Lip Seals (TG type) or Taconite Seals (ND Type) can be used. For oil lubrication special type of seal (TURU type) can be used. Principal dimensions are identical to SNA/SNH type housings and are interchangeable. MNL housing are available with 4 elliptical slots in the base designated as FMNL or 2 drilled holes in the base with suffix MS1 or 4 drilled holes in the base with suffix MS2. These housings can be used for located bearing by inserting Locating rings on either side of bearing.

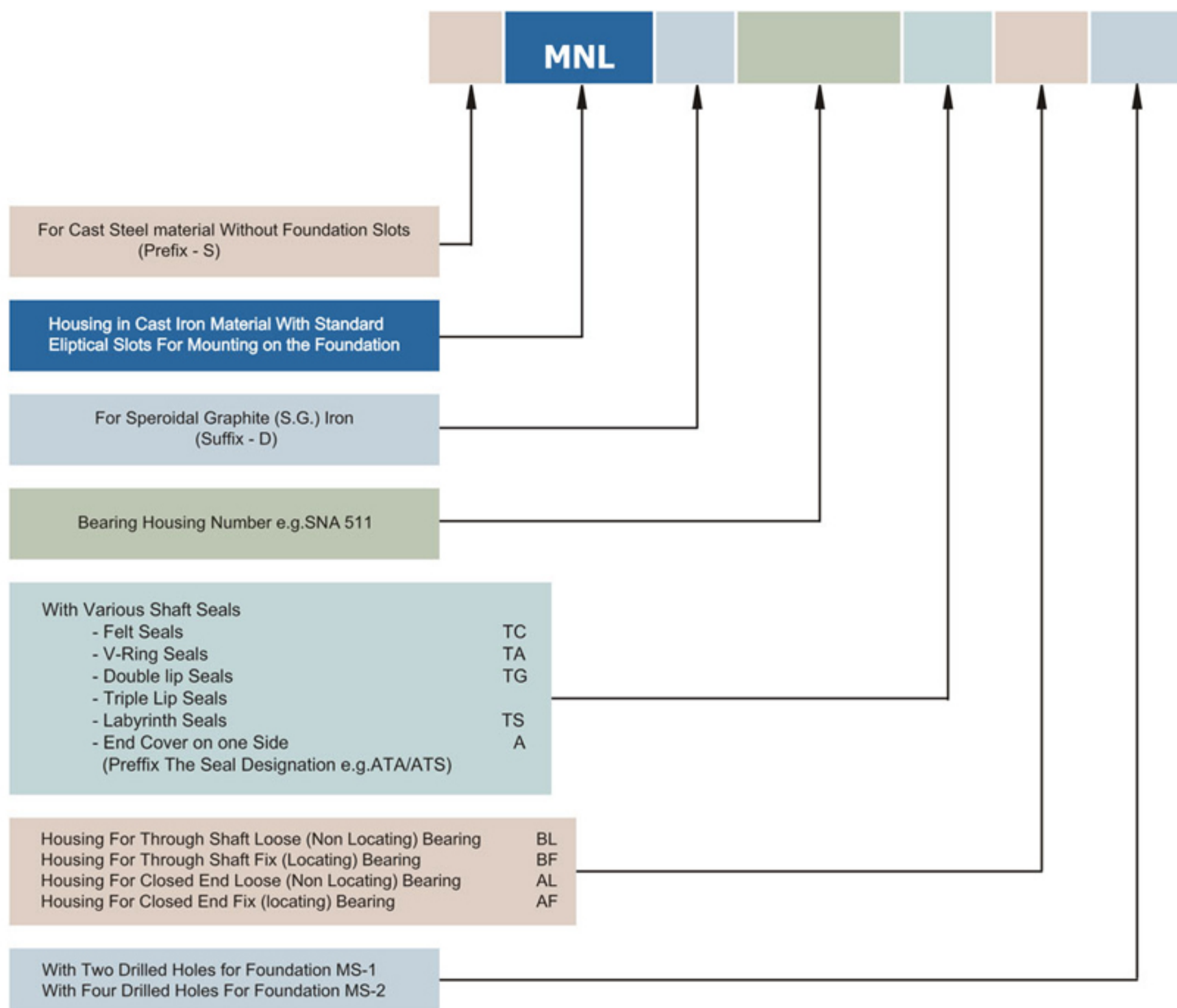

MNL 511 TS BF

S MNL D 515 ATA BL MS-2

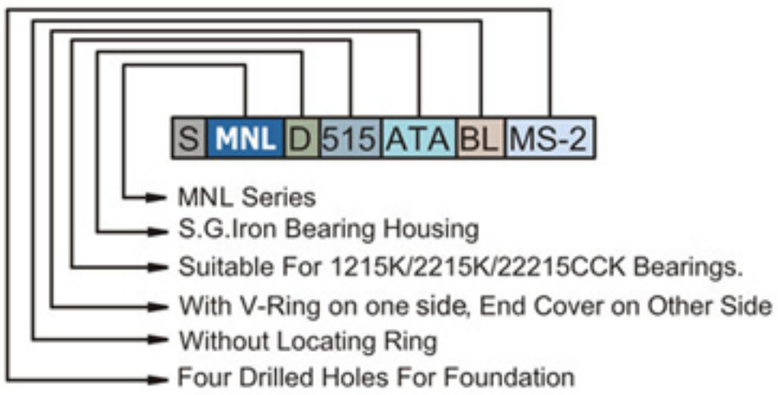

Masta®
PRECISION HOUSINGS

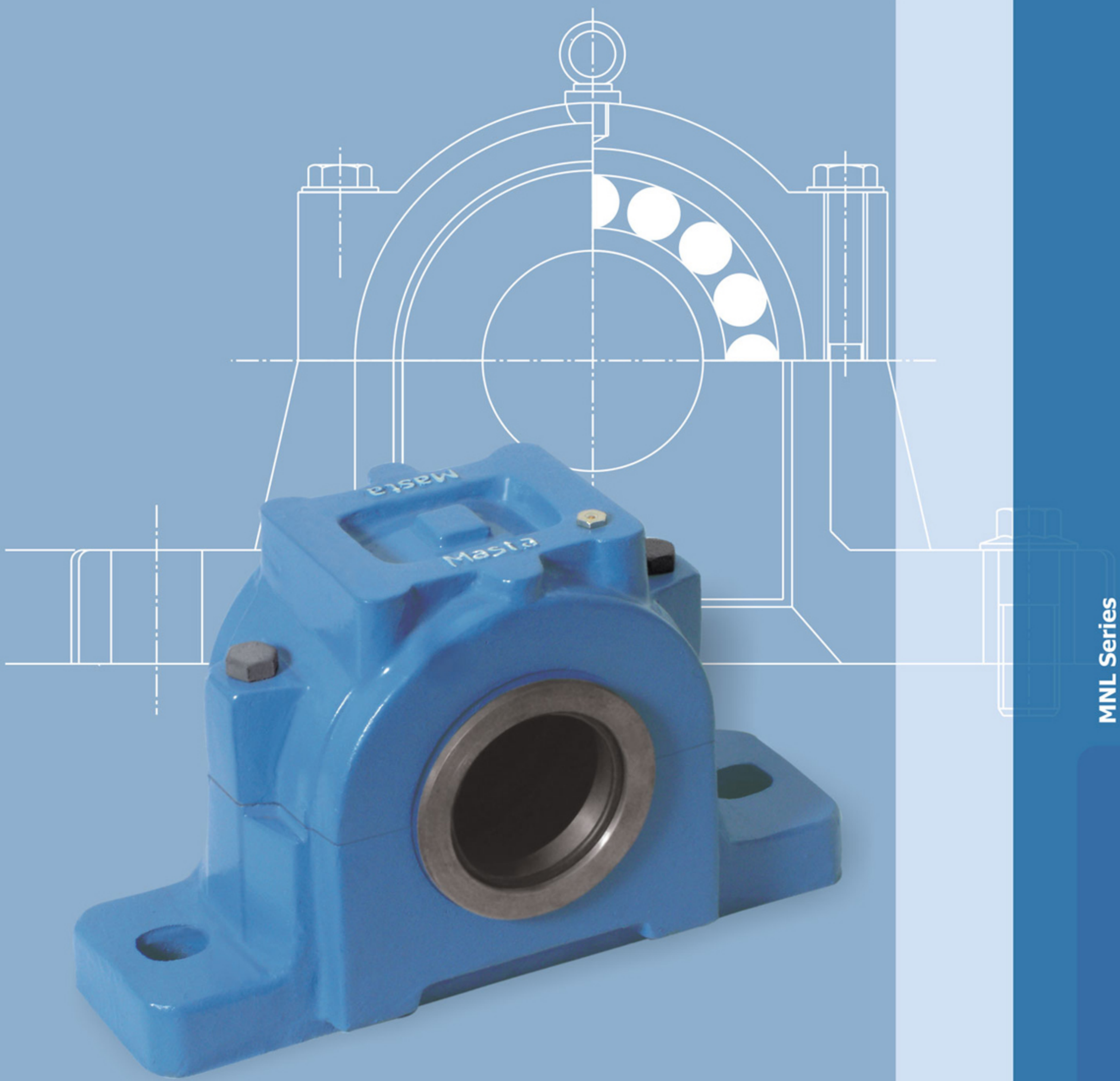

MNL Series

Equivalent to SNL Series Plummer Blocks

MNL 500 & 600 Series

Plummer Blocks (Bearing housings)
Series MNL 500 / 600 for bearings with adapter sleeves

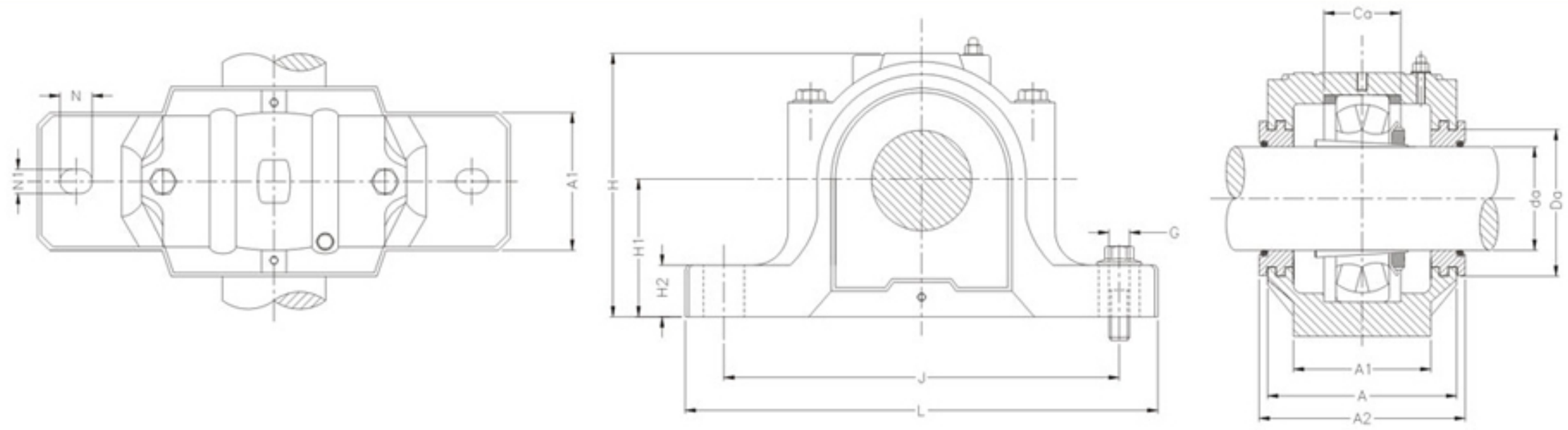

Plummer Block Designation	Shaft dia da mm	DIMENSION IN MM													Approx Weight kg.	Bearing with Adapter Sleeve	Locating Ring size / Two Nos. per Housing
		A	A1	A2	Da	H	H1	H2	J	L	Ca	N	N1	G			
MNL 505	20	67	46	80	31.5	74	40	19	130	165	25	20	15	12	1.5	1205 EK + H 205 2205 EK + H 305 22205 CCK + H 305	5/52 3.5/52 3.5/52
MNL 506	25	77	52	89	36.5	89	50	22	150	185	32	20	15	12	2.0	1206 EK + H 206 2206 EK + H 306 22206 EK + H 306	8/62 6/62 6/62
MNL 605	20															1305 EK + H 305 2305 EK + H 2305	7.5/62 4/62
MNL 507	30	82	52	94	46.5	93	50	22	150	185	34	20	15	12	2.2	1207 EK + H 207 2207 EK + H 307 22207 EK + H 307	8.5/72 5.5/72 5.5/72
MNL 606	25															1306 EK + H 306 2306 EK + H 306	7.5/72 3.5/72
MNL 508	35	85	60	97	51.5	107	60	25	170	205	39	20	15	12	3.0	1208 EK + H 208 2208 EK + H 308 22208 EK + H 308	10.5/80 8/80 8/80
MNL 607	30					108										1307 EK + H 307 2307 EK + H 2307	9/80 4/80
MNL 509	40	85	60	97	56.5	109	60	25	170	205	30	20	15	12	3.0	1209 EK + H 209 2209 EK + H 309 22209 CCK + H 309	5.5/85 3.5/85 3.5/85
MNL 510	45	90	60	102	62	113	60	25	170	205	41	20	15	12	3.3	1210 EK + H 210 2210 EK + H 310 22210 CCK + H 310	10.5/90 9/90 9/90
MNL 608	35															1308 EK + H 308 2308 EK + H 2308 21308 CCK + H 308 22308 CCK + H 2308	9/90 4/90 9/90 4/90
MNL 511	50	95	70	107	67	127	70	28	210	255	44	24	18	16	4.5	1211 EK + H 211 2211 EK + H 311 22211 EK + H 311	11.5/100 9.5/100 9.5/100
MNL 609	40					127										1309 EK + H 309 2309 EK + H 2309 21309 CCK + H 309 22309 CCK + H 2309	9.5/100 4/100 9.5/100 4/100

Masta®
PRECISION HOUSINGS

Plummer Blocks (Bearing housings) Series MNL 500 / 600 for bearings with adapter sleeves

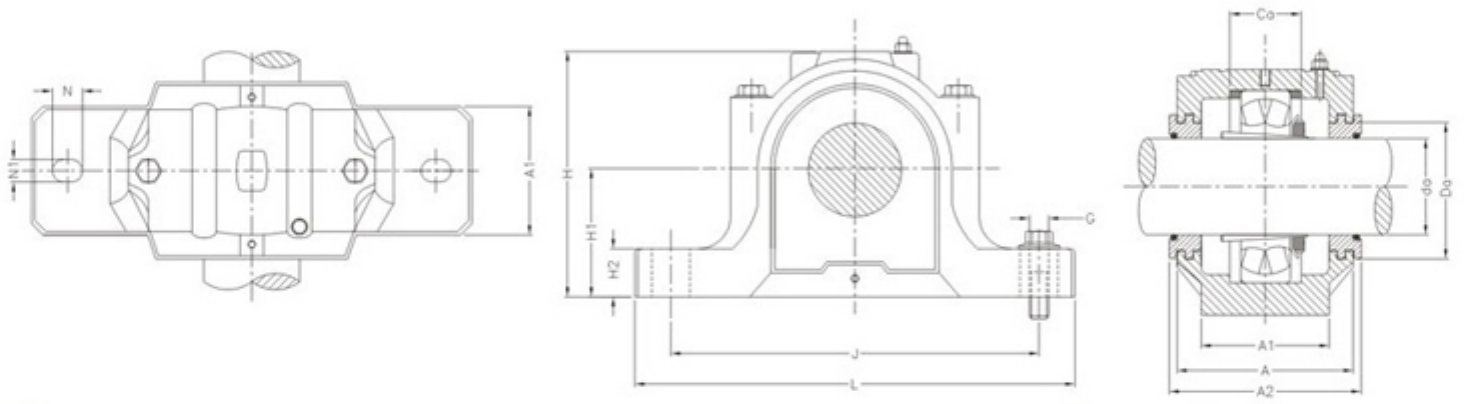

Plummer Block Designation	Shaft dia da mm	DIMENSION IN MM													Approx Weight kg.	Bearing with Adapter Sleeve	Locating Ring size / Two Nos. per Housing
		A	A1	A2	Da	H	H1	H2	J	L	Ca	N	N1	G			
MNL 512	55	105	70	117	72	134	70	30	210	255	48	24	18	16	5.3	1212 EK + H 212	13/110
																2212 EK + H 312	10/110
																22212 EK + H 312	10/110
MNL 610	45					133										1310 CCK + H 310	10.5/110
																2310 EK + H 2310	4/110
																21310 CCK +H 310	10.5/110
																22310 CCK + H 2310	4/110
MNL 513	60	110	80	122	77	149	80	30	230	275	51	24	18	16	6.5	1213 EK + H 213	14/120
																2213 EK + H 313	10/120
																22213 CCK + H 313	10/120
MNL 611	50					148										1311 EK + H 311	11/120
																2311 EK + H 2311	4/120
																21311 CCK + H 311	11/120
																22311 EK + H 2311	4/120
MNL 515	65	115	80	127	87	154	80	30	230	280	56	24	18	16	7.2	1215 EK + H 215	15.5/130
																2215 EK + H 315	12.5/130
																22215 EK+ H 315	12.5/130
MNL 612	55															1312 EK + H 312	12.5/130
																2312 EK + H 2312	5/130
																21312 CCK + H 312	12.5/130
																22312 EK + H 2312	5/130
MNL 516	70	120	90	138	92.5	177	95	32	260	315	58	28	22	20	9.5	1216 EK + H 216	16/140
																2216 EK + H 316	12.5/140
																22216 EK + H 316	12.5/140
MNL 613	60					175										1313 EK + H 313	12.5/140
																2313 EK + H 2313	5/140
																21313 CCK + H 313	12.5/140
																22313 EK + H 2313	5/140
MNL 517	75	125	90	143	97.5	183	95	32	260	320	61	28	22	20	10.2	1217 EK + H 217	16.5/150
																2217 EK + H 317	12.5/150
																22217 EK + H 317	12.5/150
MNL 518	80	140	100	158	102.5	194	100	35	290	345	65	28	22	20	12.7	1218 EK + H 218	17.5/160
																2218 EK + H 318	12.5/160
																22218 EK + H 318	12.5/160
																23218 CCK + H 2318	6.25/160
MNL 615	65					193										1315 EK + H 315	14/160
																2315 EK + H 2315	5/160
																21315 CCK + H 315	14/160
																22315 EK + H 2315	5/160

MNL 500 & 600 Series

Plummer Blocks (Bearing housings)
Series MNL 500 / 600 for bearings with adapter sleeves

Plummer Block MNL 524 / 620 and above are supplied with eye bolt on cap

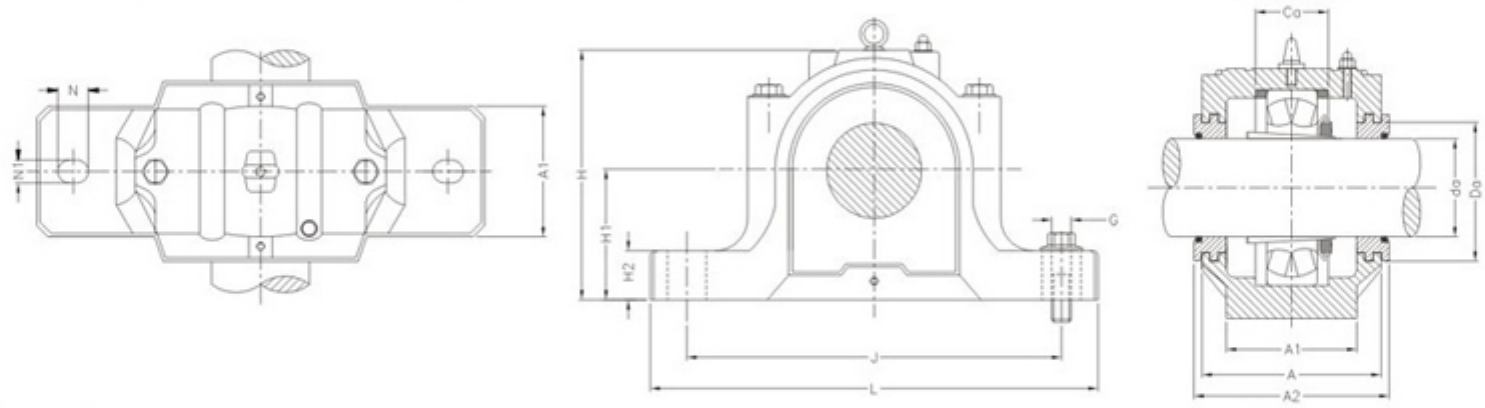

Plummer Block Designation	Shaft dia da mm	DIMENSION IN MM													Approx Weight kg.	Bearing with Adapter Sleeve	Locating Ring
		A	A1	A2	Da	H	H1	H2	J	L	Ca	N	N1	G			
MNL 519	85	145	100	163	131	212	112	35	290	345	68	28	22	20	13.9	1219 EK + H 219	18/170
																2219 EK + H 319	12.5/170
																22219 EK + H 319	12.5/170
MNL 616	70					210										1316 EK + H 316	14.5/170
																2316 EK + H 2316	5/170
																21316 CCK + H 316	14.5/170
																22316 EK + H 2316	5/170
MNL 520	90	160	110	178	137.5	218	112	40	320	380	70	32	26	24	17.6	1220 EK + H 220	18/180
																2220 EK + H 320	12/180
																22220 EK + H 320	12/180
																23220 CCK + H 2320	4.85/180
MNL 617	75					215										1317 EK + H 317	14.5/180
																2317 EK + H 2317	5/180
																21317 CCK + H 317	14.5/180
																22317 EK + H 2317	5/180
MNL 522	100	175	120	191	147.5	242	125	45	350	410	80	32	26	24	22	1222 EK + H 222	21/200
																2222 EK + H 322	13.5/200
																22222 EK + H 322	13.5/200
																23222 CCK + H 2322	5.1/200
MNL 619	85					239										1319 EK + H 319	17.5/200
																2319 EK + H 2319	6.5/200
																21319 CCK + H 319	17.5/200
																22319 EK + H 2319	6.5/200
MNL 524	110	185	120	199	157.5	271	140	45	350	410	86	32	26	24	26.5	1224 EK + H 3024	22/215
																22224 EK+ H 3124	14/215
																23224 CCK + H 2324	5/215
MNL 620	90															1320 EK + H 320	19.5/215
																2320 EK + H 2320	6.5/215
																21320 CCK + H 320	19.5/215
																22320 EK + H 2320	6.5/215
MNL 526	115	190	130	208	167.5	290	150	50	380	445	90	35	28	24	33	22226 EK + H 3126	13/230
																23226 CCK + H 2326	5/230
MNL 528	125	205	150	223	177.5	302	150	50	420	500	98	42	35	30	40	22228 CCK + H 3128	15/250
																23228 CCK + H 2328	5/250
MNL 530	135	220	160	241	192.5	323	160	60	450	530	106	42	35	30	49	22230 CCK + H 3130	16.5/270
																23230 CCK + H 2330	5/270
MNL 532	140	235	160	254	202.5	344	170	60	470	550	114	42	35	30	55	22232 CCK + H 3132	17/290
																23232 CCK + H 2332	5/290

Masta®
PRECISION HOUSINGS

Series MNL 200 / 300 Plummer Block Housing for Straight (Cylindrical) Bore Bearings

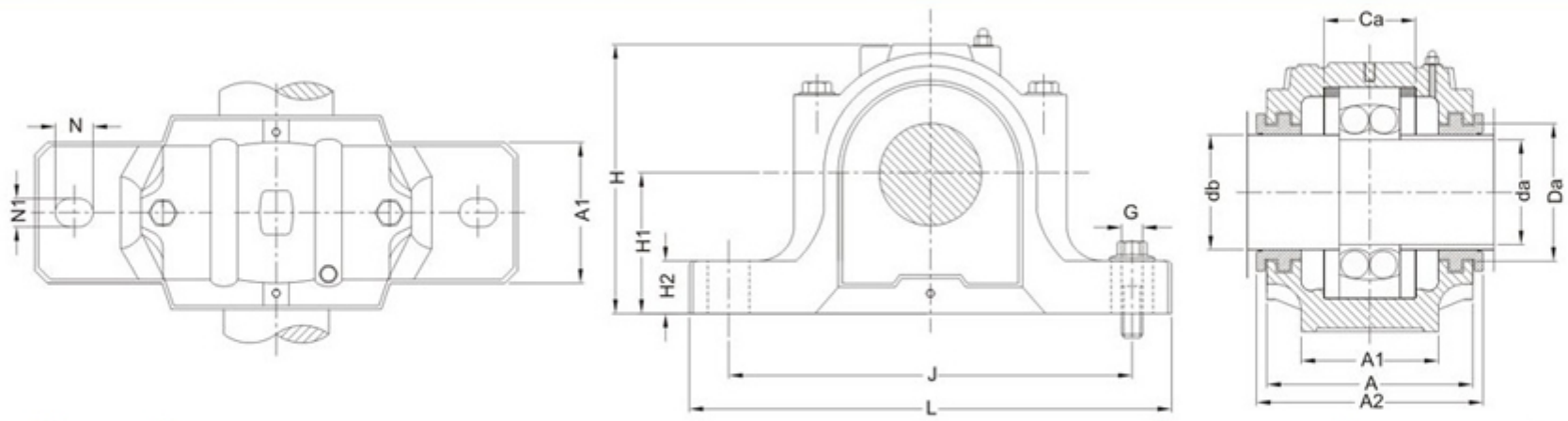

Plummer Block Designation	Shaft dia		DIMENSION IN MM													Approx Weight kg.	Suitable For Bearing	Locating Ring
	da	db	A	A1	A2	Da	H	H1	H2	J	L	Ca	N	N1	G			
MNL 205	25	30	67	46	80	36.5	74	40	19	130	165	25	20	15	12	1.5	1205 E 2205 E 22205 E	5/52 3.5/52 3.5/52
MNL 206	30	35	77	52	89	46.5	89	50	22	150	185	32	20	15	12	2.0	1206 E 2206 E 22206 E	8/62 6/62 6/62
MNL 305	25	30															1305 E 2305 E 21305 CC	7.5/62 4/62 7.5/62
MNL 207	35	45	82	52	94	56.5	93	50	22	150	185	34	20	15	12	2.2	1207 E 2207 E 22207 E	8.5/72 5.5/72 5.5/72
MNL 306	30	35															1306 E 2306 E 21306 CC	7.5/72 3.5/72 7.5/72
MNL 208	40	50	85	60	97	62	108	60	25	170	205	39	20	15	12	3.0	1208 E 2208 E 22208 E	10.5/80 8/80 8/80
MNL 307	35	45															1307 E 2307 E 21307 CC	9/80 4/80 9/80
MNL 209	45	55	85	60	97	67	109	60	25	170	205	30	20	15	12	3.0	1209 E 2209 E 22209 E	5.5/85 3.5/85 3.5/85
MNL 210	50	60	90	60	102	72	113	60	25	170	205	41	20	15	12	3.3	1210 E 2210 E 22210 E	10.5/90 9/90 9/90
MNL 308	40	50															1308 E 2308 E 21308CC 22308 E	9/90 4/90 9/90 4/90
MNL 211	55	65	95	70	107	77	128	70	28	210	255	44	24	18	16	4.5	1211 E 2211 E 22211 E	11.5/100 9.5/100 9.5/100
MNL 309	45	55															1309 E 2309 E 21309CC 22309 E	9.5/100 4/100 9.5/100 4/100

Masta®
PRECISION HOUSINGS

MNL 200 & 300 Series

Series MNL 200 / 300 Plummer Block Housing for Straight (Cylindrical) Bore Bearings

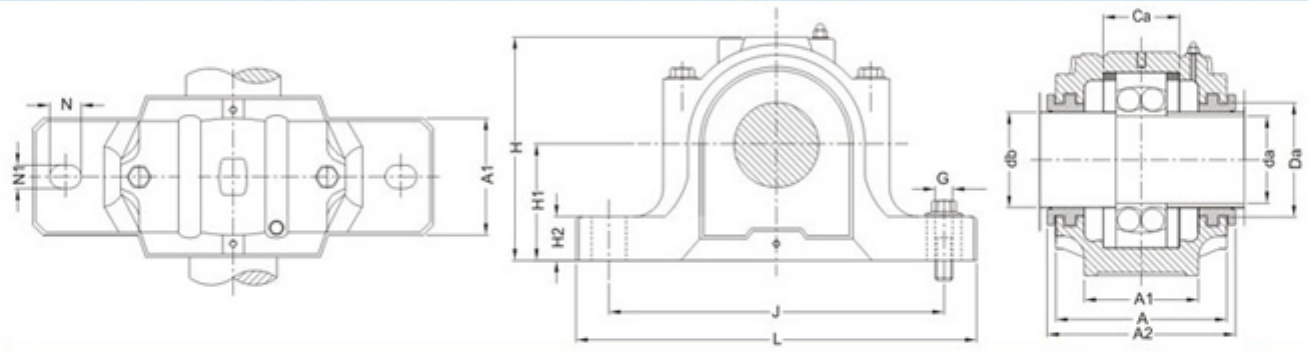

Plummer Block Designation	Shaft dia		DIMENSION IN MM													Approx Weight kg.	Suitable For Bearing	Locating Ring Size / Two
	da	db	A	A1	A2	Da	H	H1	H2	J	L	Ca	N	N1	G			
MNL 212	60	70	105	70	117	87	134	70	30	210	255	48	24	18	16	5.0	1212 E 2212 E 22212 E	13/110 10/110 10/110
MNL 310	50	60															1310 E 2310 E 21310CC 22310 E	10.5/110 4/110 10.5/110 4/110
MNL 213	65	75	110	80	122	92.5	149	80	30	230	275	51	24	18	16	6.5	1213 E 2213 E 22213 E	14/120 10/120 10/120
MNL 311	55	65															1311 E 2311 E 21311CC 22311 E	11/120 4/120 11/120 4/120
MNL 215	75	85	115	80	127	102.5	155	80	30	230	280	56	24	18	16	7.2	1215 E 2215 E 22215 E	15.5/130 12.5/130 12.5/130
MNL 312	60	70															1312 E 2312 E 21312CC 22312 E	12.5/130 5/130 12.5/130 5/130
MNL 216	80	90	120	90	138	108	177	95	32	260	315	58	28	22	20	9.5	1216 E 2216 E 22216 E	16/140 12.5/140 12.5/140
MNL 313	65	75															1313 E 2313 E 21313CC 22313 E	12.5/140 5/140 12.5/140 5/140
MNL 217	85	95	125	90	143	112	183	95	32	260	320	61	28	22	20	10	1217 E 2217 E 22217 E	16.5/150 12.5/150 12.5/150
MNL 314	70	80															1314 E 2314 E 21314CC 22314 E	13/150 5/150 13/150 5/150
MNL 218	90	100	140	100	158	120	194	100	35	290	345	65	28	22	20	12.7	1218 E 2218 E 22218 E 23218CC	17.5/160 12.5/160 12.5/160 6.25/160
MNL 315	75	85															1315 E 2315 E 21315CC 22315 E	14/160 5/160 14/160 5/160

MNL 200 & 300 Series

Masta®
PRECISION HOUSINGS

Series MNL 200 / 300 Plummer Block Housing for Straight (Cylindrical) Bore Bearings

MNL 224/320 and above are supplied with an eye bolt on top Cap

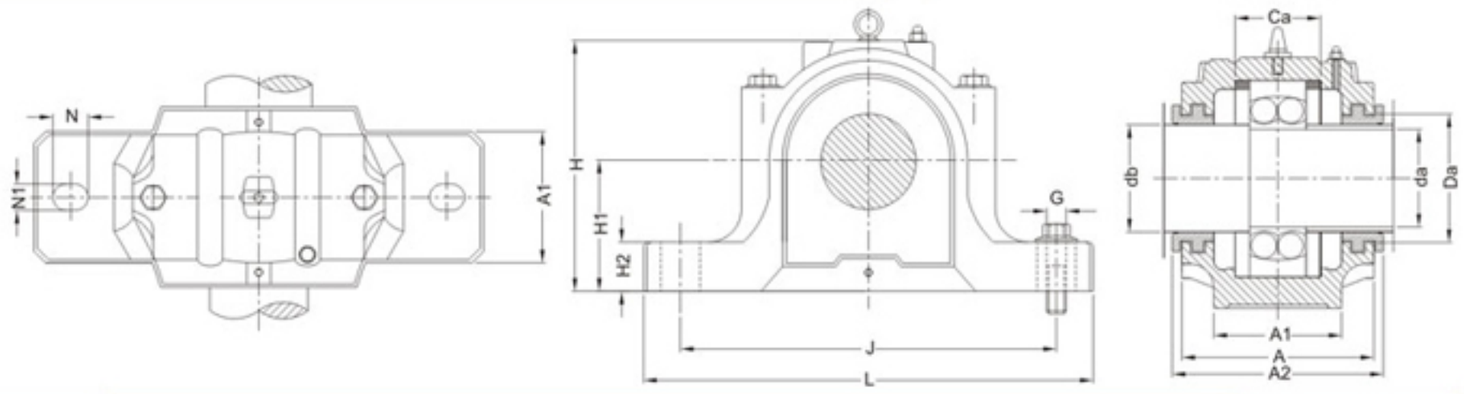

Plummer Block Designation	Shaft dia		DIMENSION IN MM													Approx Weight kg.	Suitable For Bearing	Locating Ring Size / Two
	da	db	A	A1	A2	Da	H	H1	H2	J	L	Ca	N	N1	G			
MNL 219	95	110	145	100	163	131	210	112	35	290	345	68	28	22	20	13.9	1219 E 2219 E 22219 E	18/170 12.5/170 12.5/170
MNL 316	80	90					212										1316 E 2316 E 21316CC 22316 E	14.5/170 5/170 14.5/170 5/170
MNL 220	100	115	160	110	178	137.5	218	112	40	320	380	70	32	26	24	17.6	1220 E 2220 E 22220 E 23220CC	18/180 12/180 12/180 4.85/180
MNL 317	85	95															1317 E 2317 E 21317CC 22317 E	14.5/180 5/180 14.5/180 5/180
MNL 222	110	125	175	120	191	147.5	242	125	45	350	410	80	32	26	24	22	1222 E 2222 E 22222 E 23222CC	21/200 13.5/200 13.5/200 5.1/200
MNL 319	95	110															1319 E 2319 E 21319CC 22319 E	17.5/200 6.5/200 17.5/200 6.5/200
MNL 224	120	135	185	120	199	157.5	271	140	45	350	410	86	32	26	24	26.5	1224 E 22224 E 23224CC	22/215 14/215 5/215
MNL 320	100	115															1320 E 2320 E 21320CC 22320 E	19.5/215 6.5/215 19.5/215 6.5/215
MNL 226	130	145	190	130	208	167.5	290	150	50	380	445	90	35	28	24	33	1226 E 22226 E 23226CC	22/230 13/230 5/230
MNL 228	140	155	205	150	223	177.5	302	150	50	420	500	98	42	35	30	40	22228CC 23228CC	15/250 5/250
MNL 230	150	165	220	160	241	192.5	323	160	60	450	530	106	42	35	30	49	22230CC 23230CC	16.5/270 5/270
MNL 232	160	175	235	160	254	202.5	344	170	60	470	550	114	42	35	30	55	22232CC 23232CC	17/290 5/290

Illustration for Large Size MNL 3000/3100 Series

MNL Plummer block housings are suitable for self aligning, spherical roller bearings and CARB bearings for shaft dia 150 to 340 mm. These housings are split type with 4 elliptical holes in housing base and suitable for grease or oil lubrication. For Grease lubrication variety of seals such as felt seals (TC Type), Labyrinth Seals (TS Type), Double Lip Seals (TG type) or Taconite Seals (ND Type) can be used. For oil lubrication special type of seal (TURU type) can be used. Principal dimensions are identical to SNA/SNH type housings and are interchangeable. MNL housing are available with 4 elliptical slots in the base designated as FMNL or 2 drilled holes in the base with suffix MS1 or 4 drilled holes in the base with suffix MS2. These housings can be used for located bearing by inserting Locating rings on either side of bearing.

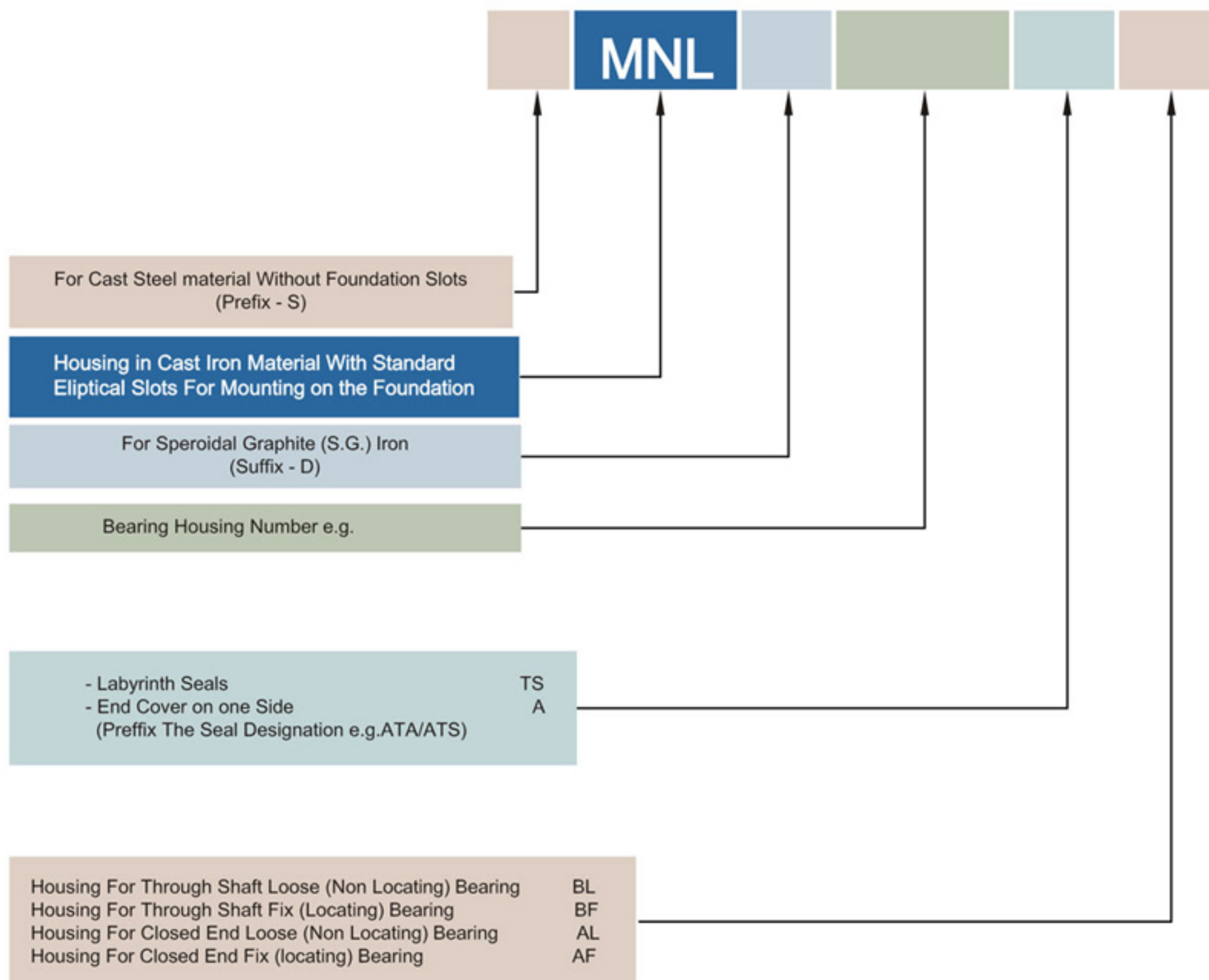

Masta®
PRECISION HOUSINGS

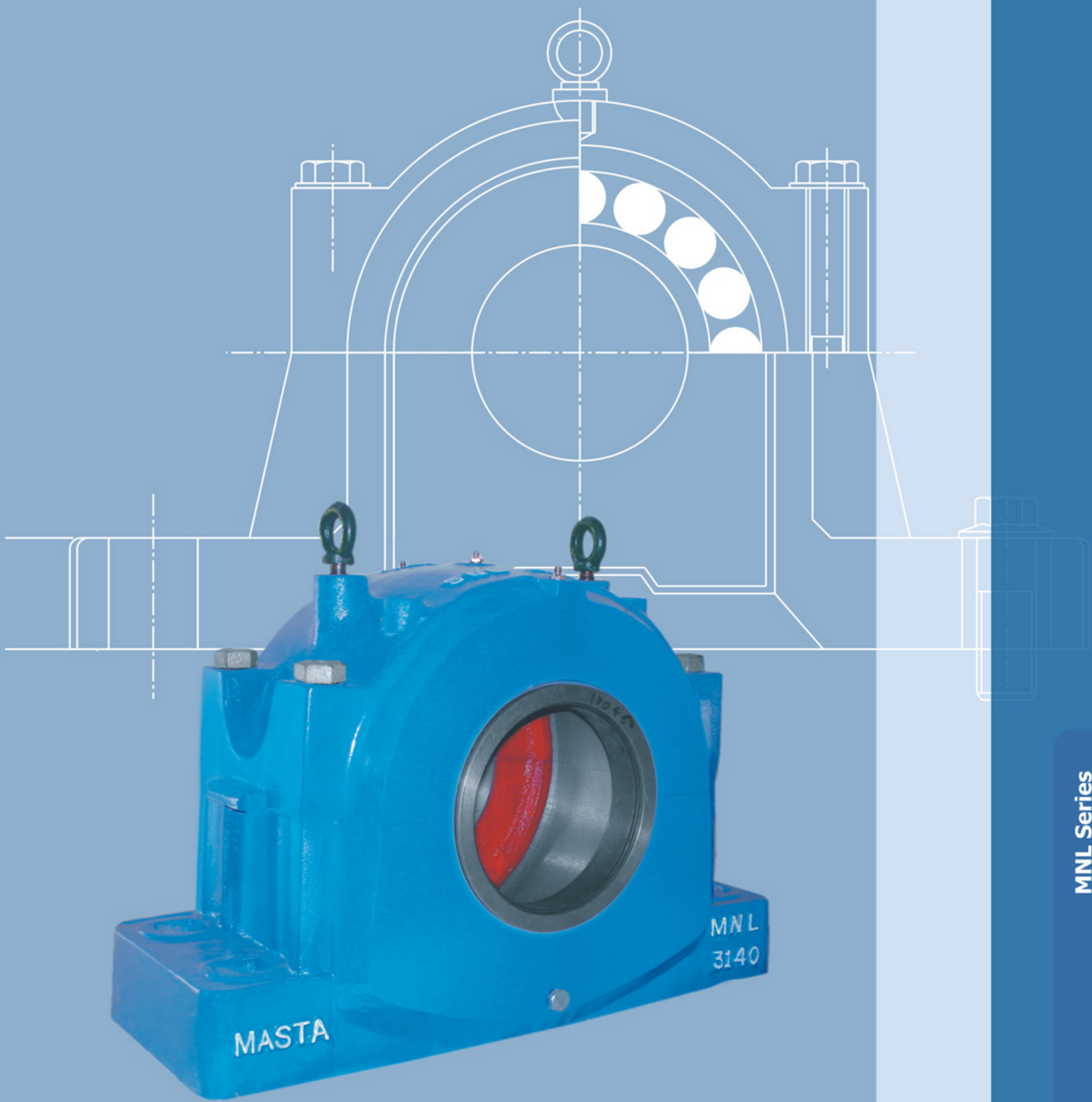

MNL 3000/3100 Series

Equivalent to SNL 3000/3100 Series Plummer Blocks

Series MNL 3000/3100 Plummer Block Suitable for Cylindrical Spherical Roller Bearing with Adapter Sleeves

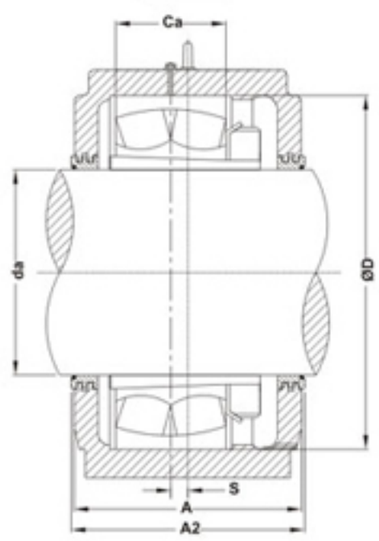

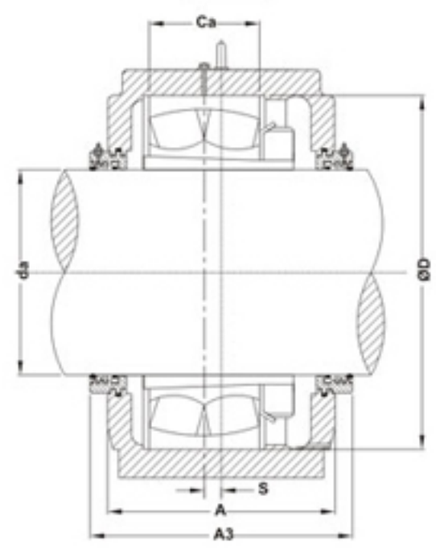

Designations Housing Complete with Two Laby Seals	Shaft da mm	A mm	Housing Dimension in mm										
			A1	H	H1	H2	J	J1	L	N	N1	S	G
MNL 3134 TS	150	230	180	333	170	70	430	100	510	34	28	14	24
MNL 3036 TS	160	230	180	333	170	70	430	100	510	34	28	14	24
MNL 3136 TS	160	240	190	353	180	75	450	110	530	34	28	15	24
MNL 3038 TS	170	240	190	353	180	75	450	110	530	34	28	15	24
MNL 3138 TS	170	260	210	375	190	80	480	120	560	34	28	10	24
MNL 3040 TS	180	260	210	375	190	80	480	120	560	34	28	10	24
MNL 3140 TS	180	280	230	411	210	85	510	130	610	42	35	10	30
MNL 3044 TS	200	280	230	411	210	85	510	130	610	42	35	10	30
MNL 3144 TS	200	290	240	434	220	90	540	140	640	42	35	12	30

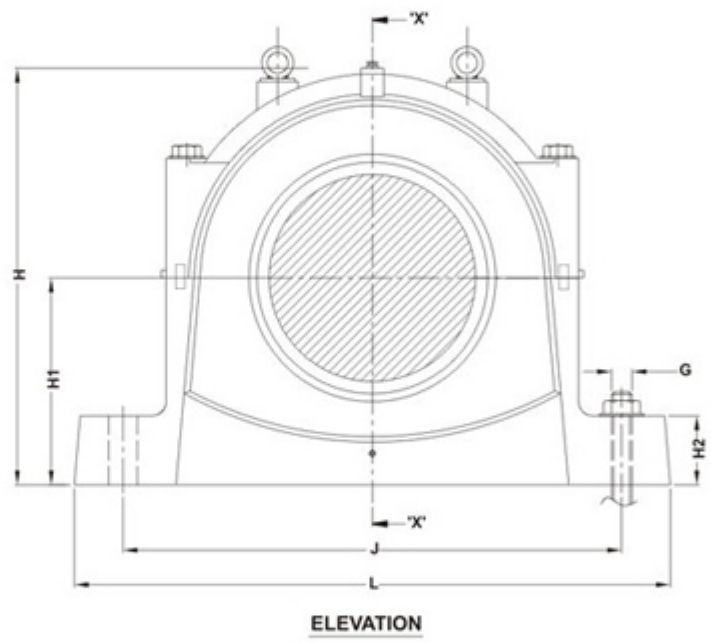

ELEVATION

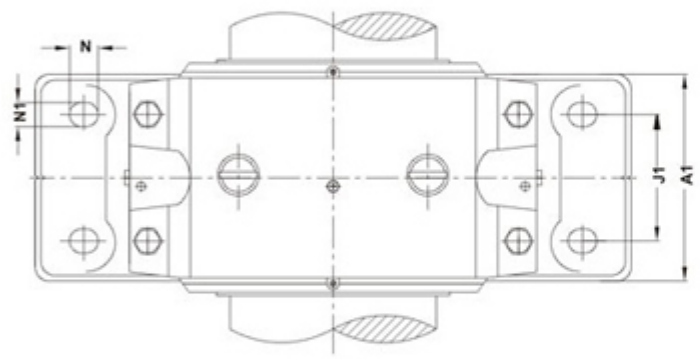

TOP VIEW

Shaft	Approx Weight	Bearing Seating				Eye Bolts	Appropriate Bearings and Associated Components		
da mm	kg.	Ca mm	Da	A_2 mm	A_3		Spherical Roller Bearing	Adapter Sleeve	Locating Ring
150	69.5	108	280	240	300	M 16	23134 CCK/W33	H 3134	2 FRB 10/280
160	69.5	108	280	240	310	M 16	23036 CCK/W33	H 3036	2 FRB 17/280
160	77.5	116	300	250	315	M 16	23136 CCK/W33	H 3136	2 FRB 10/300
170	77.5	115	290	250	315	M 16	23038 CCK/W33	H 3038	4 FRB 10/290
170	97.5	124	320	270	335	M 20	23138 CCK/W33	H 3138	2 FRB 10/320
180	97.5	122	310	270	335	M 20	23040 CCK/W33	H 3040	4 FRB 10/310
180	123	132	340	290	355	M 20	23140 CCK/W33	H 3140	2 FRB 10/340
200	123	130	340	290	360	M 20	23044 CCK/W33	OH 3044 H	4 FRB 10/340
200	138	140	370	300	365	M 20	23144 CCK/W33	OH 3144 H	2 FRB 10/370

Series MNL 3000/3100 Plummer Block Suitable for Spherical Roller Bearing with Adapter Sleeves

LABYRINTH SEAL
TS TYPE

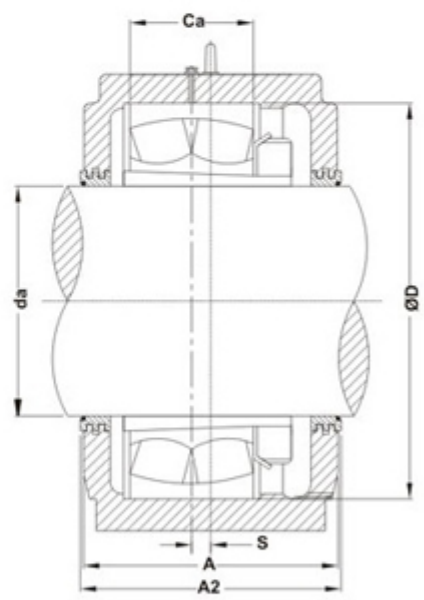

TACONITE SEAL (Optional)
ND TYPE

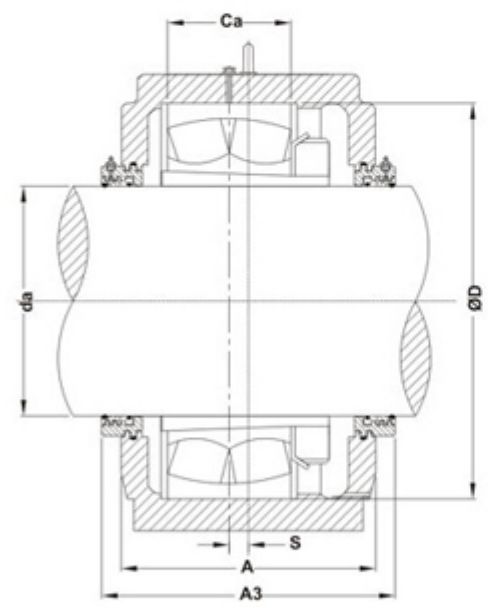

Designations Housing Complete with Two Seals	Shaft da mm	Housing Dimension in mm												Approx Weight kg.
		A mm	A1	H	H1	H2	J	J1	L	N	N1	S	G	
MNL 3048 TS	220	290	240	434	220	90	540	140	640	42	35	12	30	139
MNL 3148 TS	220	310	260	474	240	95	600	150	700	42	35	12	30	187
MNL 3052 TS	240	310	260	474	240	95	600	150	700	42	35	12	30	187
MNL 3152 TS	240	320	280	516	260	100	650	160	770	50	42	13	36	221
MNL 3056 TS	260	320	280	516	260	100	650	160	770	50	42	13	36	221
MNL 3156 TS	260	320	280	551	280	105	670	160	790	50	42	16	36	252
MNL 3060 TS	280	320	280	551	280	105	670	160	790	50	42	16	36	252
MNL 3160 TS	280	350	310	591	300	110	710	190	830	50	42	22	36	301
MNL 3064 TS	300	350	310	591	300	110	710	190	830	50	42	22	36	301
MNL 3164 TS	300	370	330	631	320	115	750	200	880	50	42	23	36	339
MNL 3068 TS	320	370	330	631	320	115	750	200	880	50	42	23	36	339
MNL 3168 TS	320	400	360	675	340	120	810	220	950	50	42	24	36	427

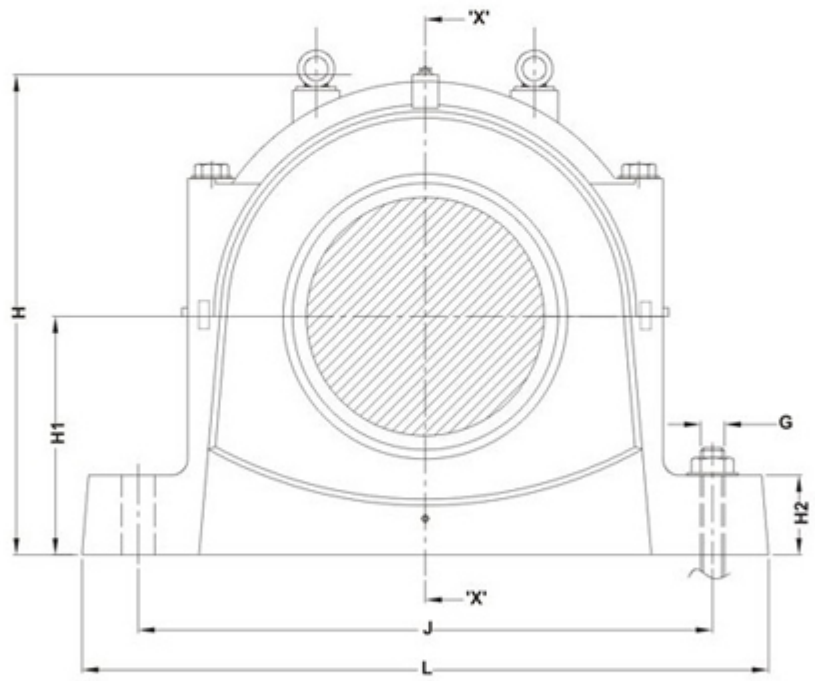

ELEVATION

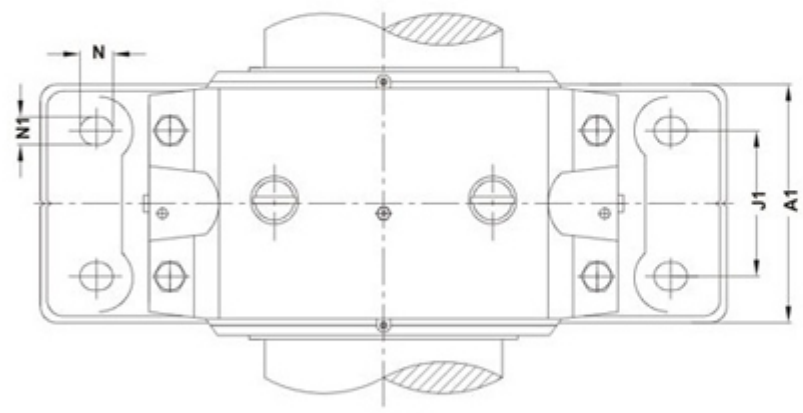

TOP VIEW

Shaft	Bearing Seating		Width Across Seals			Appropriate Bearings and Associated Components		
da mm	Ca mm	Da	A_2 mm	A_3	Eye Bolts	Spherical Roller Bearing	Adapter Sleeve	Locating Ring
220	140	360	300	380	M 20	23048 CCK/W33	OH 3048 H	4 FRB 12/360
220	148	400	315	400	M 24	23148 CCK/W33	OH 3148 H	2 FRB 10/400
240	148	400	315	400	M 24	23052 CCK/W33	OH 3052 H	2 FRB 22/400
240	164	440	330	415	M 24	23152 CCK/W33	OH 3152 H	2 FRB 10/440
260	166	420	330	415	M 24	23056 CCK/W33	OH 3056 H	6 FRB 10/420
260	166	460	330	415	M 24	23156 CCK/W33	OH 3156 H	2 FRB 10/460
280	168	460	330	415	M 24	23060 CCK/W33	OH 3060 H	2 FRB 25/460
280	180	500	360	445	M 30	23160 CCK/W33	OH 3160 H	2 FRB 10/500
300	181	480	360	445	M 30	23064 CCK/W33	OH 3064 H	6 FRB 10/480
300	196	540	380	465	M 30	23164 CCK/W33	OH 3164 H	2 FRB 10/540
320	197	520	380	465	M 30	23068 CCK/W33	OH 3068 H	4 FRB 16/520
320	210	580	410	495	M 30	23168 CCK/W33	OH 3168 H	2 FRB 10/580

Series MNL 3000 Plummer Block Suitable for Straight (Cylindrical) Bore Bearings

TACONITE SEAL (Optional)
ND TYPE

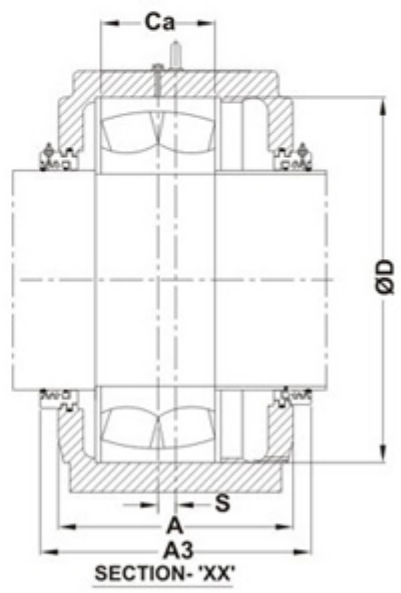

LABYRINTH SEAL
TS TYPE

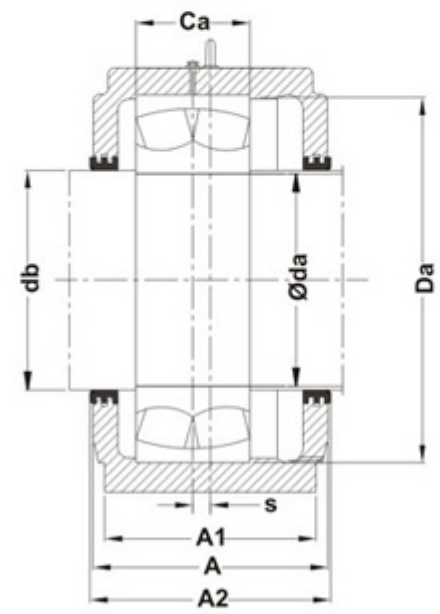

Designations Housing Complete with Two Seals	Shaft		Housing Dimension in mm											
	da mm	db	A	A1	H	H1	H2	J	J1	L	N	N1	S	G
MNL 3134 GTS	170	180	230	180	333	170	70	430	100	510	34	28	14	24
MNL 3036 GTS	180	200	230	180	333	170	70	430	100	510	34	28	14	24
MNL 3136 GTS	180	200	240	190	353	180	75	450	110	530	34	28	15	24
MNL 3038 GTS	190	200	240	190	353	180	75	450	110	530	34	28	15	24
MNL 3138 GTS	190	200	260	210	375	190	80	480	120	560	34	28	10	24
MNL 3040 GTS	200	220	260	210	375	190	80	480	120	560	34	28	10	24
MNL 3140 GTS	200	220	280	230	411	210	85	510	130	610	42	35	10	30
MNL 3044 GTS	220	240	280	230	411	210	85	510	130	610	42	35	10	30
MNL 3144 GTS	220	240	290	240	434	220	90	540	140	640	42	35	12	30
MNL 3048 GTS	240	260	290	240	434	220	90	540	140	640	42	35	12	30
MNL 3148 GTS	240	260	310	260	474	240	95	600	150	700	42	35	12	30
MNL 3052 GTS	260	280	310	260	474	240	95	600	150	700	42	35	12	30
MNL 3152 GTS	260	280	320	280	516	260	100	650	160	770	50	42	13	36
MNL 3056 GTS	280	300	320	280	516	260	100	650	160	770	50	42	13	36
MNL 3156 GTS	280	300	320	280	551	280	105	670	160	790	50	42	16	36
MNL 3060 GTS	300	320	320	280	551	280	105	670	160	790	50	42	16	36
MNL 3160 GTS	300	320	350	310	591	300	110	710	190	830	50	42	22	36
MNL 3064 GTS	320	340	350	310	591	300	110	710	190	830	50	42	22	36
MNL 3164 GTS	320	340	370	330	631	320	115	750	200	880	50	42	23	36
MNL 3068 GTS	340	360	370	330	631	320	115	750	200	880	50	42	23	36

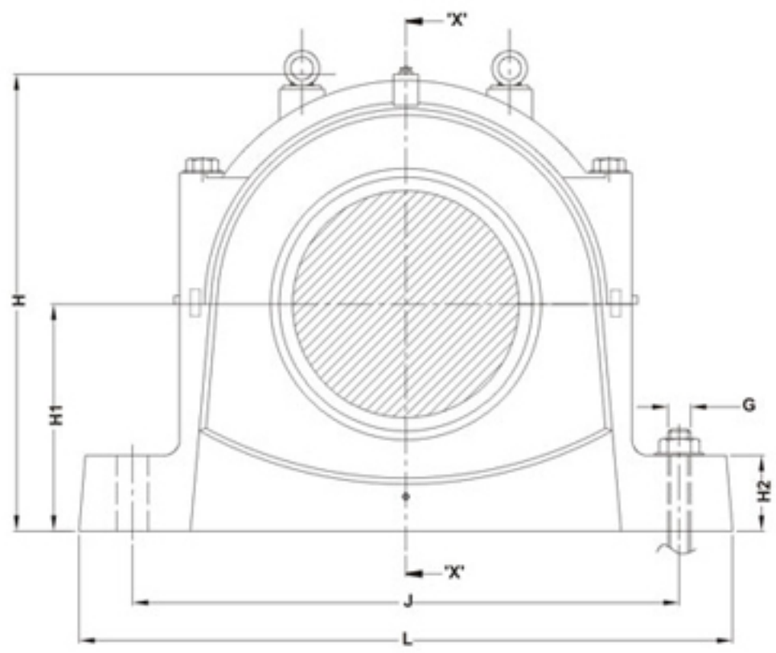

ELEVATION

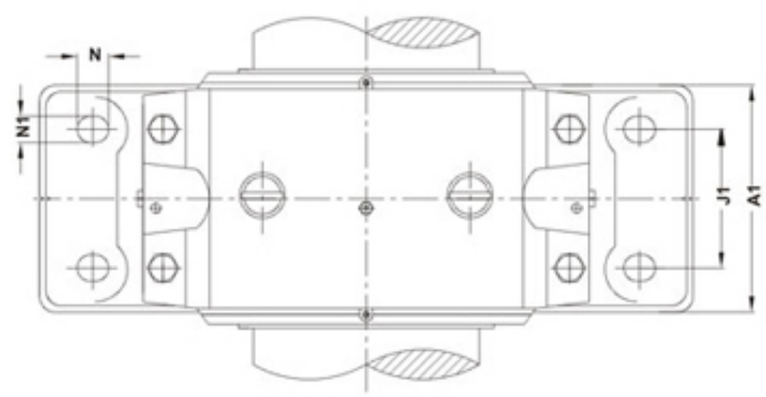

TOP VIEW

Mass	Shaft		Bearing Seating		Width Across Seals			Appropriate Bearings and Associated Components	
kg.	da mm	db	Ca mm	Da	A_2 mm	A_3	Eye Bolts	Spherical Roller Bearing	Locating Ring
69.5	170	180	108	280	240	300	M 16	23134 CC/W33	2 FRB 10/280
69.5	180	200	108	280	240	310	M 16	23036 CC/W33	2 FRB 17/280
77.5	180	200	116	300	250	315	M 16	23136 CC/W33	2 FRB 10/300
77.5	190	200	115	290	250	315	M 16	23038 CC/W33	4 FRB 10/290
97.5	190	200	124	320	270	335	M 20	23138 CC/W33	2 FRB 10/320
97.5	200	220	122	310	270	335	M 20	23040 CC/W33	4 FRB 10/310
123	200	220	132	340	290	355	M 20	23140 CC/W33	2 FRB 10/340
123	220	240	130	340	290	360	M 20	23044 CC/W33	4 FRB 10/340
138	220	240	140	370	300	365	M 20	23144 CC/W33	2 FRB 10/370
139	240	260	140	360	300	380	M 20	23048 CC/W33	4 FRB 12/360
187	240	260	148	400	315	400	M 24	23148 CC/W33	2 FRB 10/400
187	260	280	148	400	315	400	M 24	23052 CC/W33	2 FRB 22/400
221	260	280	164	440	330	415	M 24	23152 CC/W33	2 FRB 10/440
221	280	300	166	420	330	415	M 24	23056 CC/W33	6 FRB 10/420
252	280	300	166	460	330	415	M 24	23156 CC/W33	2 FRB 10/460
252	300	320	168	460	330	415	M 24	23060 CC/W33	2 FRB 25/460
301	300	320	180	500	360	445	M 30	23160 CC/W33	2 FRB 10/500
301	320	340	181	480	360	445	M 30	23064 CC/W33	6 FRB 10/480
339	320	340	196	540	380	465	M 30	23164 CC/W33	2 FRB 10/540
339	340	360	197	520	380	465	M 30	23068 CC/W33	4 FRB 16/520

Illustration for SNV Series

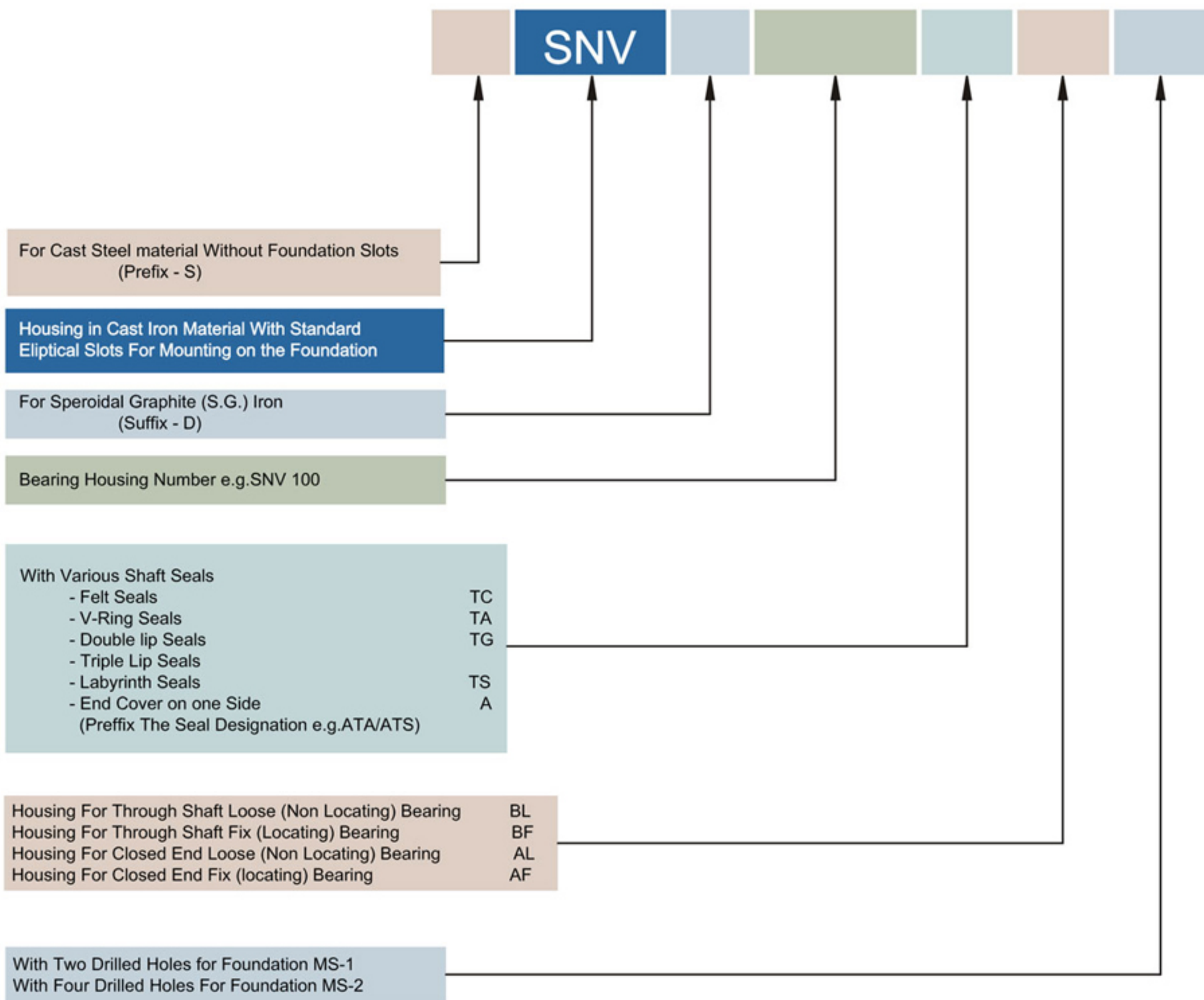

SNV 100 TS BF

S SNV D 130 ATA BL MS-2

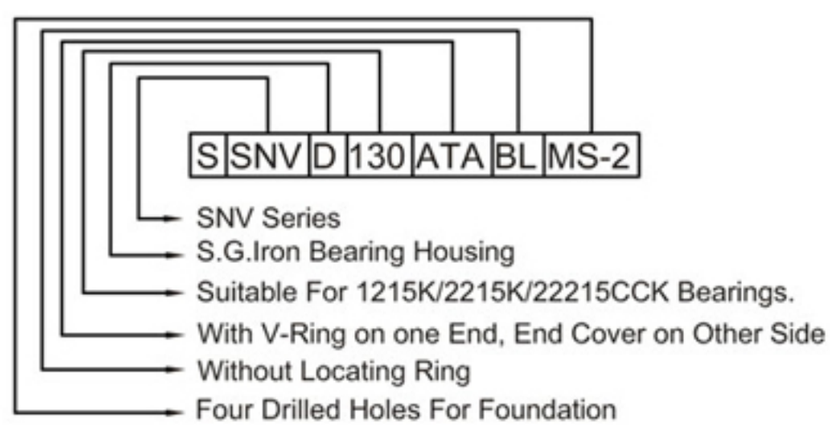

Masta®
PRECISION HOUSINGS

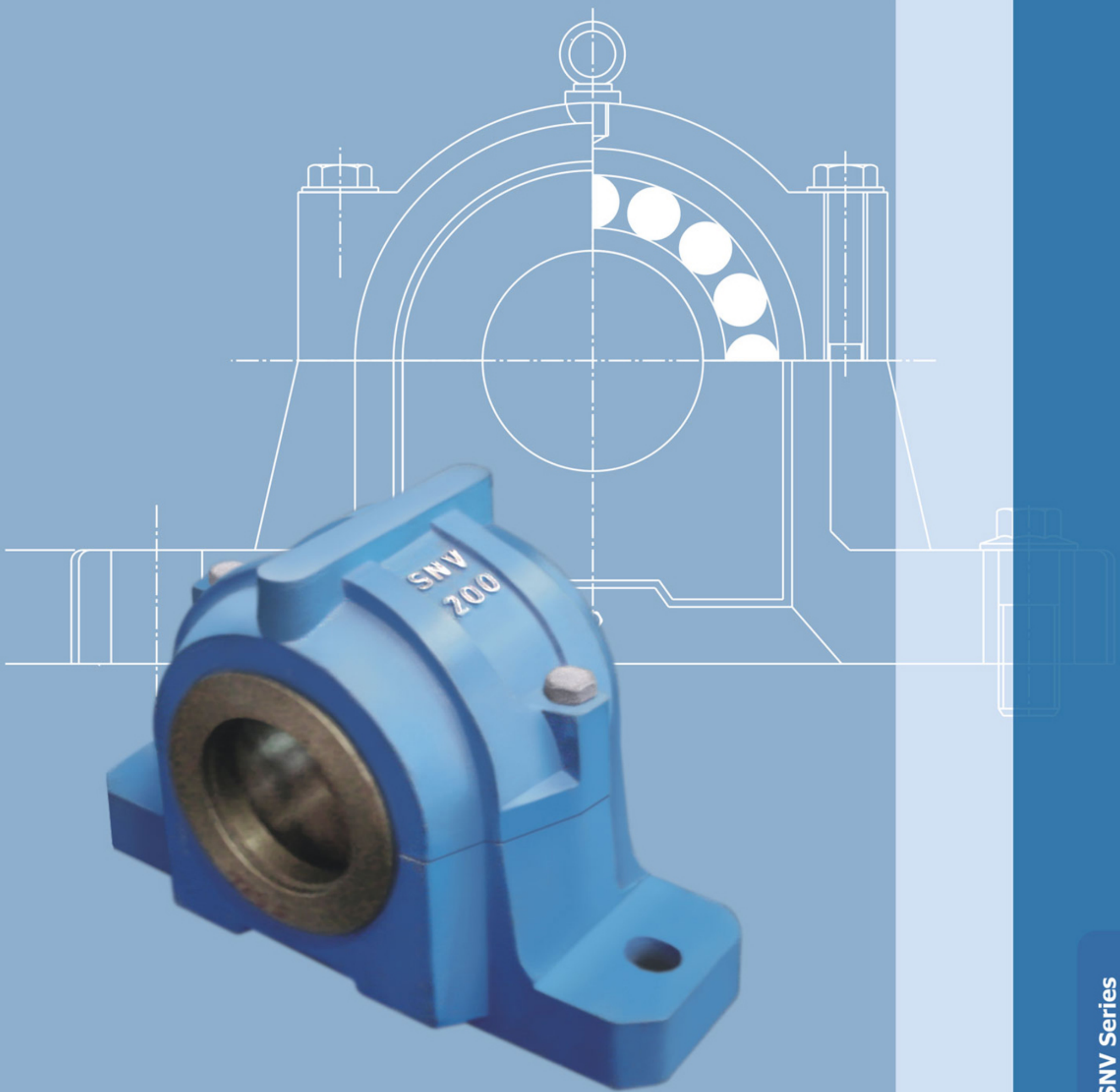

SNV Series

Plummer Blocks (Bearing housings)
Series SNV for bearings with adapter sleeves

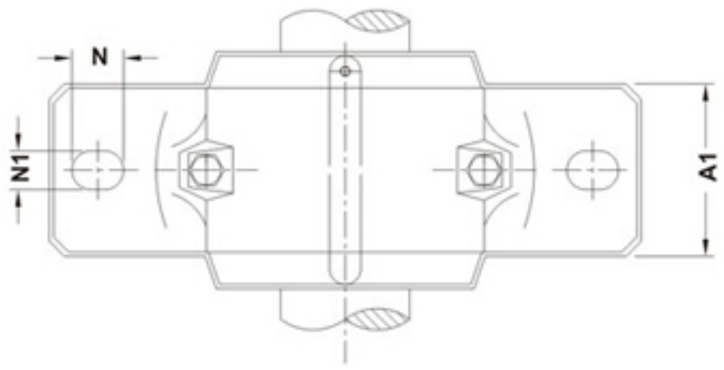

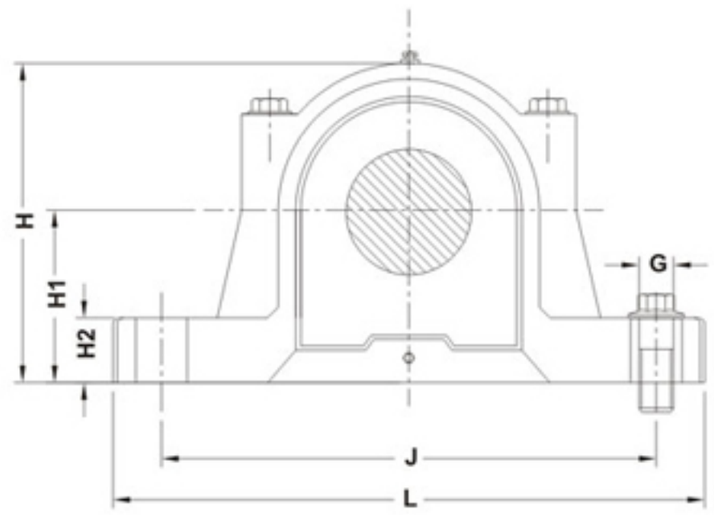

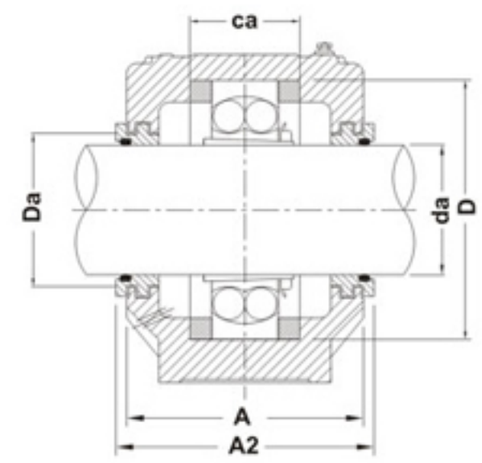

Plummer Block Designation	Shaft dia da mm	DIMENSION IN MM												Approx Weight kg.	Bearing with Adapter Sleeve	Locating Ring size / Two Nos. per Housing
		A	A1	Da	H	H1	H2	J	L	Ca	N	N1	G			
SNV 52	20	67	46	31.5	71	40	19	130	165	25	20	15	12	1.5	1205 EK + H 205	5/52
															2205 EK + H 305	3.5/52
															22205 EK + H 305	3.5/52
SNV 62	25	77	52	36.5	89	50	22	150	185	32	20	15	12	2.2	1206 EK + H 206	8/62
															2206 EK + H 306	6/62
															22206 EK+ H 306	6/62
	20														1305 EK + H 305	7.5/62
															2305 EK + H 2305	4/62
SNV 72	30	82	52	46.5	93	50	22	150	185	34	20	15	12	2.4	1207 EK + H 207	8.5/72
															2207 EK + H 307	5.5/72
															22207 EK+ H 307	5.5/72
	25														1306 EK + H 306	7.5/72
															2306 EK + H 306	3.5/72
SNV 80	35	85	60	51.5	107	60	25	170	205	39	20	15	12	3.0	1208 EK + H 208	10.5/80
															2208 EK + H 308	8/80
															22208 EK+ H 308	8/80
	30														1307 EK + H 307	9/80
															2307 EK + H 307	4/80
SNV 85	40	85	60	56.5	109	60	25	170	205	30	20	15	12	3.0	1209 EK + H 209	5.5/85
															2209 EK + H 309	3.5/85
															22209 EK+ H 309	3.5/85
SNV 90	45	90	60	62	113	60	25	170	205	41	20	15	12	3.3	1210 EK + H 210	10.5/90
															2210 EK + H 310	9/90
	35														22210 EK+ H 310	9/90
															1308 EK + H 308	9/90
															2308 EK + H 2308	4/90
															21308CCK+ H 308	9/90
SNV 100	50	95	70	67	127	70	28	210	255	44	24	18	16	4.5	22308 EK+ H 2308	4/90
															1211 EK + H 211	11.5/100
															2211 EK + H 311	9.5/100
	40														22211 EK+ H 311	9.5/100
															1309 EK + H 309	9.5/100
															2309 EK + H 2309	4/100
															21309CCK+ H 309	9.5/100
															22309 EK+ H 2309	4/100

Masta®
PRECISION HOUSINGS

Plummer Blocks (Bearing housings) Series SNV for bearings with adapter sleeves

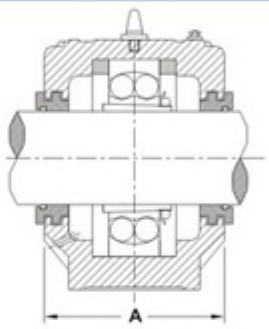

TS Type Design
Labyrinth Collar

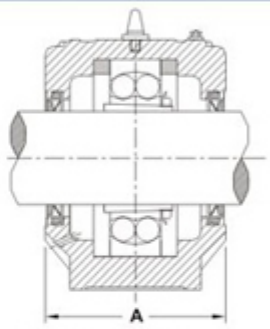

TA Type Design
V-Ring with GI Lip
Waser

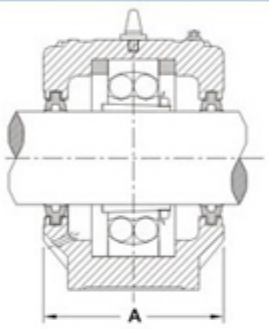

TG Type Design
Double Lip Seal

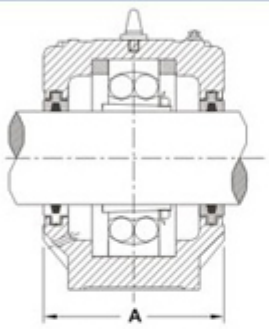

TC Type Design
Felt Collar

Plummer Block Designation	Shaft dia da mm	DIMENSION IN MM												Approx Weight kg.	Bearing with Adapter Sleeve	Locating Ring size / Two Nos. per Housing
		A	A1	Da	H	H1	H2	J	L	Ca	N	N1	G			
SNV 110	55	105	70	72	133	70	30	210	255	48	24	18	16	5.3	1212 EK + H 212	13/110
															2212 EK + H 312	10/110
															22212 EK + H 312	10/110
	45														1310 EK + H 310	10.5/110
															2310 EK + H 2310	4/110
															21310 CCK + H 310	10.5/110
															22310 EK + H 2310	4/110
SNV 120	60	110	80	77	148	80	30	230	275	51	24	18	16	6.8	1213 EK + H 213	14/120
															2213 EK + H 313	10/120
															22213 EK + H 313	10/120
	50														1311 EK + H 311	11/120
															2311 EK + H 2311	4/120
															21311 CCK + H 311	11/120
															22311 EK + H 2311	4/120
SNV 130	65	115	80	87	154	80	30	230	280	56	24	18	16	7.2	1215 EK + H 215	15.5/130
															2215 EK + H 315	12.5/130
															22215 EK + H 315	12.5/130
	55														1312 EK + H 312	12.5/130
															2312 EK + H 2312	5/130
															21312 CCK + H 312	12.5/130
															22312 EK + H 2312	5/130
SNV 140	70	120	90	92.5	175	95	32	260	315	58	28	22	20	9.8	1216 EK + H 216	16/140
															2216 EK + H 316	12.5/140
															22216 EK+ H 316	12.5/140
	60														1313 EK + H 313	12.5/140
															2313 EK + H 2313	5/140
															21313 CCK + H 313	12.5/140
															22313 EK + H 2313	5/140
SNV 150	75	125	90	97.5	183	95	32	260	320	61	28	22	20	10.5	1217 EK + H 217	16.5/150
															2217 EK + H 317	12.5/150
															22217 EK + H 317	12.5/150
SNV 160	80	140	100	102.5	193	100	35	290	345	65	28	22	20	12.7	1218 EK + H 218	17.5/160
															2218 EK + H 318	12.5/160
															22218 EK + H 318	12.5/160
															23218 CCK + H 2318	6.25/160
	65														1315 EK + H 315	14/160
															2315 EK + H 2315	5/160
															21315 CCK + H 315	14/160
															22315 EK + H 2315	5/160

Series SNV for Bearings with Adapter Sleeves

Series SNV 215 and above are supplied with an eye bolt on top

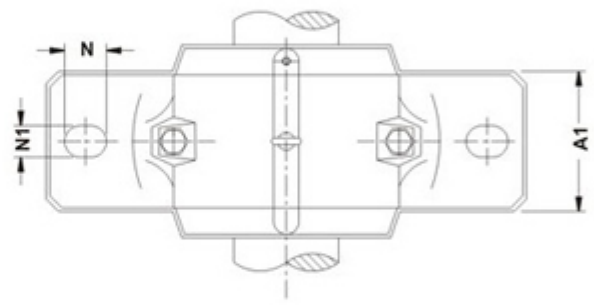

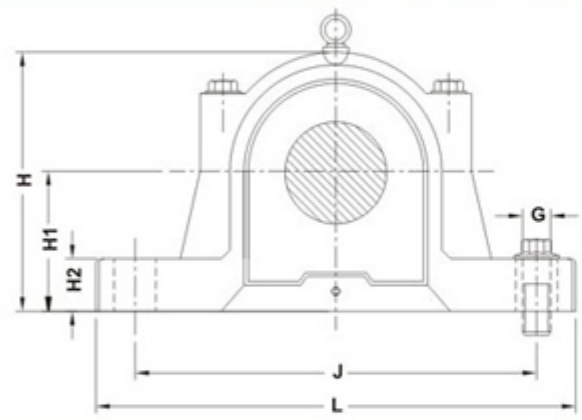

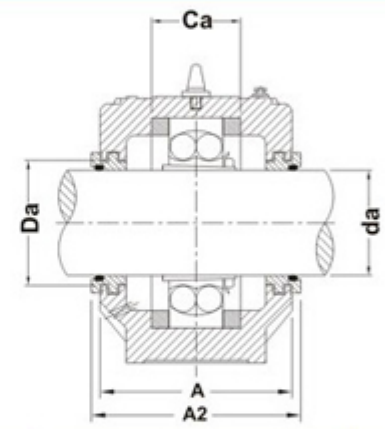

Plummer Block Designation	Shaft dia da mm	DIMENSION IN MM												Approx Weight kg.	Bearing with Adapter Sleeve	Locating Ring size / Two Nos. per Housing
		A	A1	Da	H	H1	H2	J	L	Ca	N	N1	G			
SNV 170	85	145	100	131	210	112	35	290	345	68	28	22	20	13.9	1219 EK + H 219	18/170
															2219 EK + H 319	12.5/170
															22219 EK+ H 319	12.5/170
	70														1316 EK + H 316	14.5/170
															2316 EK + H 2316	5/170
															21316CCK+ H 316	14.5/170
															22316 EK+ H 2316	5/170
SNV 180	90	160	110	137.5	215	112	40	320	380	70	32	26	24	18.0	1220 EK + H 220	18/180
															2220 EK + H 320	12/180
															22220 EK+ H 320	12/180
															23220CCK+ H 2320	4.85/180
	75														1317 EK + H 317	14.5/180
															2317 EK + H 2317	5/180
															21317CCK+ H 317	14.5/180
															22317 EK+ H 2317	5/180
SNV 200	100	175	120	147.5	239	125	45	350	410	80	32	26	24	22.5	1222 EK + H 222	21/200
															2222 EK + H 322	13.5/200
															22222 EK+ H 322	13.5/200
															23222CCK+ H 2322	5.1/200
	85														1319 EK + H 319	17.5/200
															2319 EK + H 2319	6.5/200
															21319CCK+ H 319	17.5/200
															22319 EK+ H 2319	6.5/200
SNV 215	110	185	120	157.5	271	140	45	350	410	86	32	26	24	26.5	1224 EK + H 3024	22/215
															22224 EK+ H 3124	14/215
															23224CCK+ H 2324	5/215
	90														1320 EK + H 320	19.5/215
															2320 EK + H 2320	6.5/215
															21320CCK+ H 320	19.5/215
															22320 EK+ H 2320	6.5/215
SNV 230	115	190	130	167.5	290	150	50	380	445	90	35	28	24	33.5	22226 EK+ H 3126	13/230
															23226CCK+ H 2326	5/230
SNV 250	125	205	150	177.5	302	150	50	420	500	98	42	35	30	40.8	22228CCK+ H 3128	15/250
															23228CCK+ H 2328	5/250
SNV 270	135	220	160	192.5	323	160	60	450	530	106	42	35	30	49.8	22230CCK+ H 3130	16.5/270
															23230CCK+ H 2330	5/270
SNV 290	140	235	160	202.5	344	170	60	470	550	114	42	35	30	56.0	22232CCK+ H 3132	17/290
															23232CCK+ H 2332	5/290

Masta®
PRECISION HOUSINGS

Series SNV Plummer Block Suitable for Straight (Cylindrical) Bore Bearings

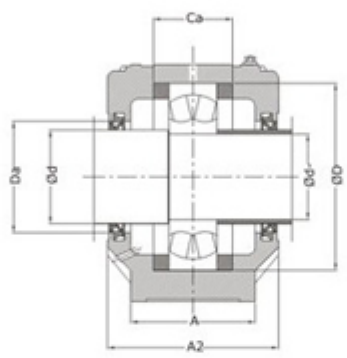

SECTION 'A-A'

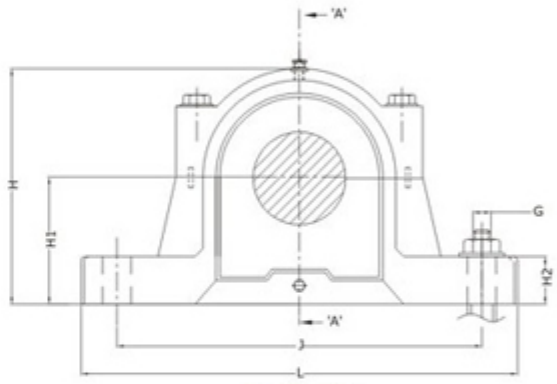

ELEVATION

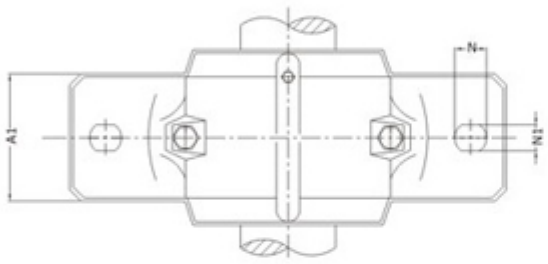

TOP VIEW

Plummer Block Designation	Shaft dia		DIMENSION IN MM												Approx Weight kg.	Suitable For Bearing	Locating Ring size / Two Nos. per Housing
	da	db	A	A1	Da	H	H1	H2	J	L	Ca	N	N1	G			
SNV 52	25	30	67	46	36.5	79	40	19	130	165	25	20	15	12	1.5	1205 E 2205 E 22205 E	5/52 3.5/52 3.5/52
SNV 62	30	35	77	52	46.5	89	50	22	150	185	32	20	15	12	2.2	1206 E 2206 E 22206 E	8/62 6/62 6/62
	25	30														1305 E 2305 E 21305 CC	7.5/62 4/62 7.5/62
SNV 72	35	45	82	52	56.5	93	50	22	150	185	34	20	15	12	2.4	1207 E 2207 E 22207 E	8.5/72 5.5/72 5.5/72
	30	35														1206 E 2206 E 21306 CC	7.5/72 3.5/72 7.5/72
SNV 80	40	50	85	60	62	107	60	25	170	205	39	20	15	12	3.0	1208 E 2208 E 22208 E	10.5/80 8/80 8/80
	35	45														1307 E 2307 E 21307 CC	9/80 4/80 9/80
SNV 85	45	55	85	60	67	109	60	25	170	205	30	20	15	12	3.0	1209 E 2209 E 22209 E	5.5/85 3.5/85 3.5/85
SNV 90	50	60	90	60	72	113	60	25	170	205	41	20	15	12	3.3	1210 E 2210 E 22210 E	10.5/90 9/90 9/90
	40	50														1308 E 2308 E 21308 CC 22308 E	9/90 4/90 9/90 4/90
SNV 100	55	65	95	70	77	127	70	28	210	255	44	24	18	16	4.5	1211 E 2211 E 22211 E	11.5/100 9.5/100 9.5/100
	45	55														1309 E 2309 E 21309 CC 22309 E	9.5/100 4/100 9.5/100 4/100

Masta®
PRECISION HOUSINGS

SNV Series

Series SNV Plummer Block Housing for Straight (Cylindrical) Bore Bearings

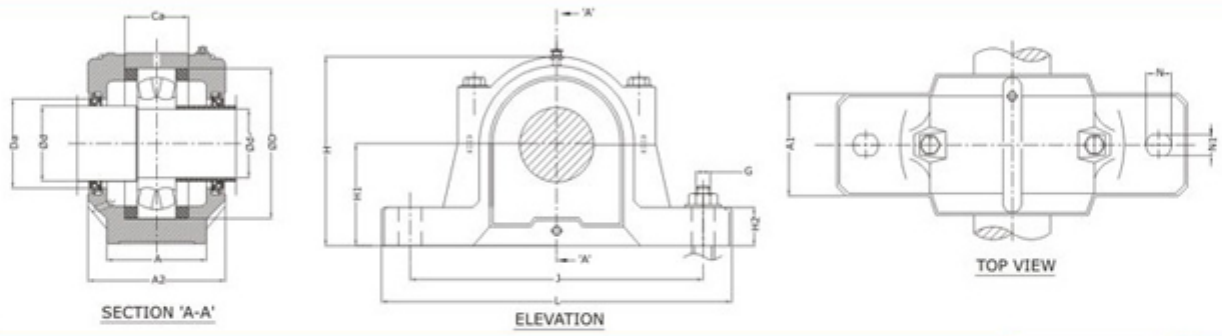

Plummer Block Designation	Shaft dia		DIMENSION IN MM												Approx Weight kg.	Suitable For Bearing	Locating Ring size / Two Nos. per Housing
	da	db	A	A1	Da	H	H1	H2	J	L	Ca	N	N1	G			
SNV 110	60	70	105	70	87	133	70	30	210	255	48	24	18	16	5.3	1212 E	13/110
																2212 E	10/110
																22212 E	10/110
	50	60														1310 E	10.5/110
																2310 E	4/110
																21310CC	10.5/110
																22310 E	4/110
SNV 120	65	75	110	80	92.5	148	80	30	230	275	51	24	18	16	6.8	1213 E	14/120
																2213 E	10/120
																22213 E	10/120
	55	65														1311 E	11/120
																2311 E	4/120
																2131CC	11/120
																22311 E	4/120
SNV 130	75	85	115	80	102.5	154	80	30	230	280	56	24	18	16	7.2	1215 E	15.5/130
																2215 E	12.5/130
																22215 E	12.5/130
	60	70														1312 E	12.5/130
																2312 E	5/130
																21312CC	12.5/130
																22312 E	5/130
SNV 140	80	90	120	90	108	175	95	32	260	315	58	28	22	20	9.8	1216 E	16/140
																2216 E	12.5/140
																22216 E	12.5/140
	65	75														1313 E	12.5/140
																2313 E	5/140
																21313CC	12.5/140
																22313 E	5/140
SNV 150	85	95	125	90	112	183	95	32	260	320	61	28	22	20	10.5	1217 E	16.5/150
																2217 E	12.5/150
																22217 E	12.5/150
	70	80														1314 E	13/150
																2314 E	5/150
																21314CC	13/150
																22314 E	5/150
SNV 160	90	100	140	100	120	193	100	35	290	345	65	28	22	20	12.7	1218 E	17.5/160
																2218 E	12.5/160
																22218 E	12.5/160
																23218CC	6.25/160
	75	85														1315 E	14/160
																2315 E	5/160
																21315CC	14/160
																22315 E	5/160

Masta® PRECISION HOUSINGS

Series SNV Plummer Block Housing for Straight (Cylindrical) Bore Bearings

Series SNV 215 and above are supplied with eye bolt on Top Cap

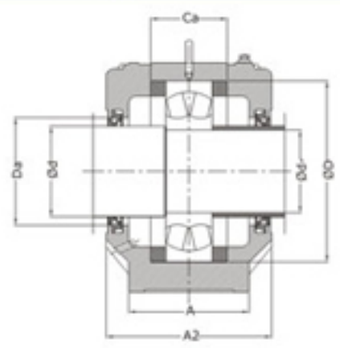

SECTION 'A-A'

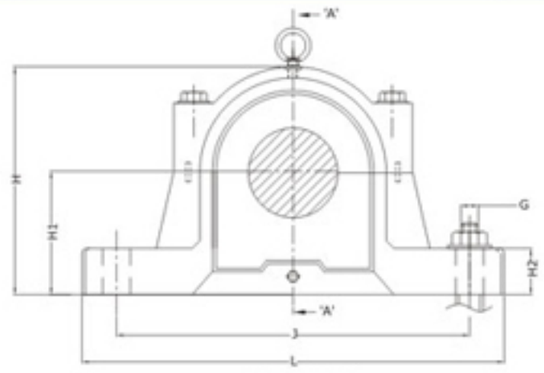

ELEVATION

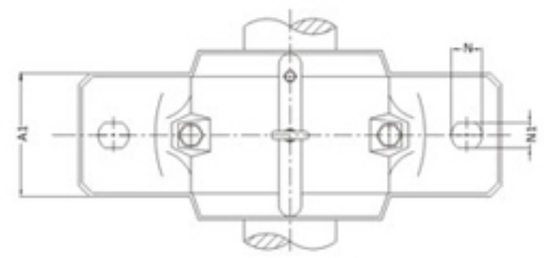

TOP VIEW

Plummer Block Designation	Shaft dia		DIMENSION IN MM												Approx Weight kg.	Suitable For Bearing	Locating Ring size / Two Nos. per Housing
	da	db	A	A1	Da	H	H1	H2	J	L	Ca	N	N1	G			
SNV 170	95	110	145	100	131	210	112	35	290	345	68	28	22	20	13.9	1219 E 2219 E 22219 E	18/170 12.5/170 12.5/170
	80	90														1316 E 2316 E 21316CC 22316 E	14.5/170 5/170 14.5/170 5/170
SNV 180	100	115	160	110	137.5	215	112	40	320	380	70	32	26	24	18.0	1220 E 2220 E 22220 E 23220CC	18/180 12/180 12/180 4.85/180
	85	95														1317 E 2317 E 21317CC 22317 E	14.5/180 5/180 14.5/180 5/180
SNV 200	110	125	175	120	147.5	239	125	45	350	410	80	32	26	24	22.5	1222 E 2222 E 22222 E 23222CC	21/200 13.5/200 13.5/200 5.1/200
	95	110														1319 E 2319 E 21319CC 22319 E	17.5/200 6.5/200 17.5/200 6.5/200
SNV 215	120	135	185	120	157.5	271	140	45	350	410	86	32	26	24	26.5	1224 E 22224 E 23224CC	22/215 14/215 5/215
	100	115														1320 E 2320 E 21320CC 22320 E	19.5/215 6.5/215 19.5/215 6.5/215
SNV 230	130	145	190	130	167.5	290	150	50	380	445	90	35	28	24	33.5	1226 E 22226 E 23226CC	22/230 13/230 5/230
SNV 250	140	155	205	150	177.5	302	150	50	420	500	98	42	35	30	40.8	22228CC 23228CC	15/250 5/250
SNV 270	150	165	220	160	192.5	323	160	60	450	530	106	42	35	30	49.8	22230CC 23230CC	16.5/270 5/270
SNV 290	160	175	235	160	202.5	344	170	60	470	550	114	42	35	30	56.0	22232CC 23232CC	17/290 5/290

Illustration for SD Series

SD series plummer blocks are made of Grey Cast Iron Grade FG 200 of IS: 210, which can be made from SG Iron (SDD) or Cast Steel Castings (SDT) also for heavier loads on order.

SD series plummer blocks are suitable for spherical roller bearings of series 231 K with adapter sleeves for shaft dia 150 mm to 300 mm, and same are designated as SD 31...Plummer Block suitable for bearings series 230 are designated as SD 30. similarly SD 500 and SD 600 series plummer blocks are suitable for 22200 CCK and 22300 CCK series bearings respectively. SD series plummer blocks with straight bore bearing are designated with suffix G. e.g. SD 31.....G.

These plummer blocks are either supplied with triple seal type labyrinth collars on both ends and the plummer blocks housings are designated by suffix TS or with triple seal type labyrinth collar on one end and End cover on other end for end shaft, which are designated with suffix ATS. All Labyrinth seals are supplied with rubber "O" cords and allen grub screws which ensure that the seal rotates with the shaft.

All SD series plummer blocks are suitable for floating loose (L) bearings it can be held or fixed (F) by inserting suitable locating rings which are supplied on orders.

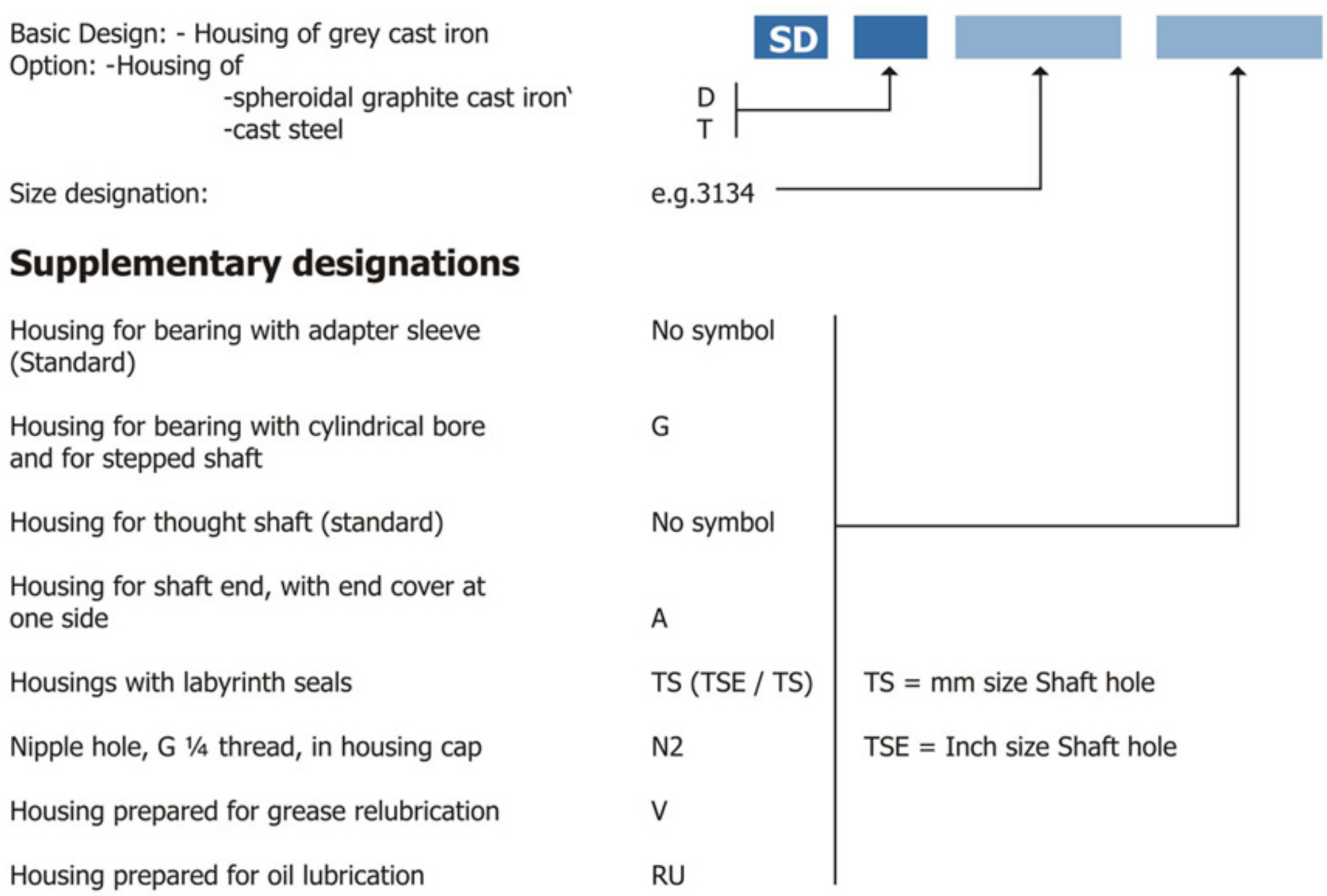

For combinations the symbols are written in the same order as presented above.

Masta®
PRECISION HOUSINGS

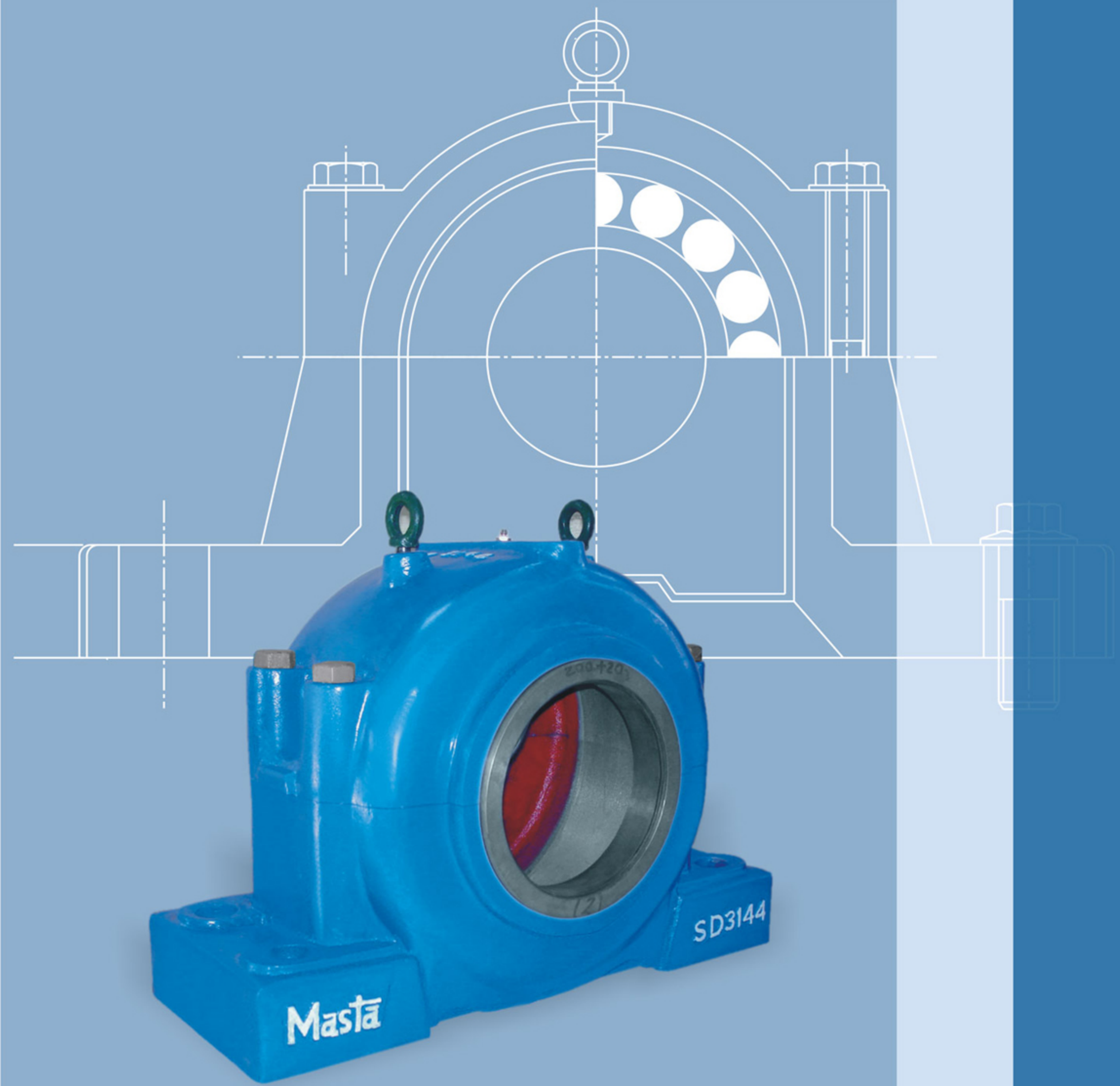

SD Series

Plummer Blocks (Bearing housings)
Series SD 33 Suitable for bearing series 230K with Adapter Sleeve

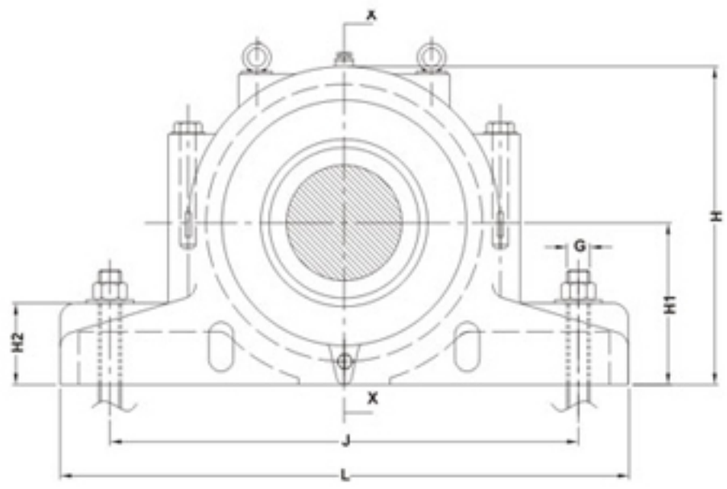

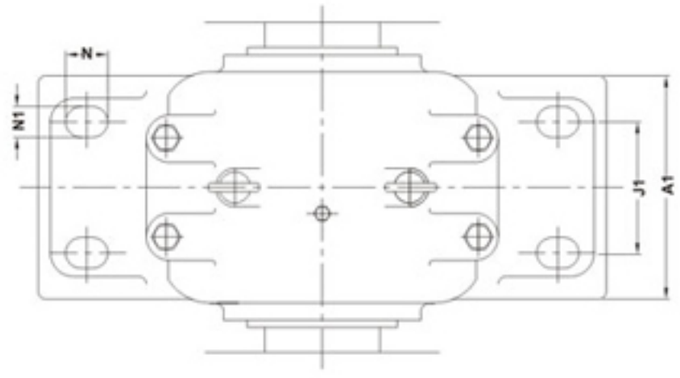

Plummer Block Designation	Shaft dia	DIMENSION IN MM							
	d1	L	J	J1	H2	H1	H	A1	A
SD 3340	180	620	510	140	60	180	360	230	270
SD 3344	200	700	570	160	65	200	400	260	290
SD 3348	220	740	610	170	65	210	420	270	300
SD 3352	240	820	680	190	70	240	475	300	330
SD 3356	260	860	710	200	85	250	500	320	350
SD 3360	280	920	770	210	85	280	550	330	360
SD 3364	300	940	790	210	85	280	560	340	370
SD 3368	320	1020	860	230	100	310	615	370	400
SD 3372	340	1060	890	250	100	325	640	390	410
SD 3376	360	1080	900	260	100	340	665	390	410

Masta®
PRECISION HOUSINGS

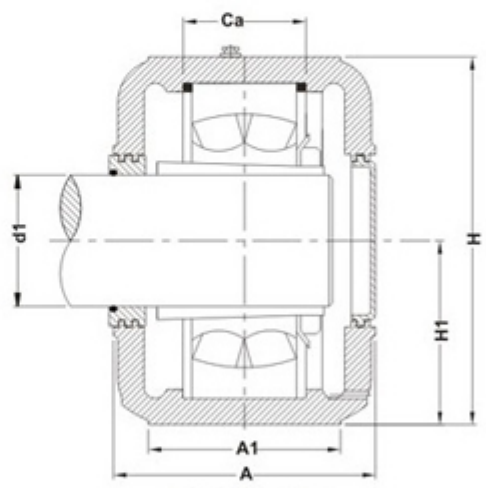

ONE END CLOSED
(ATS TYPE)

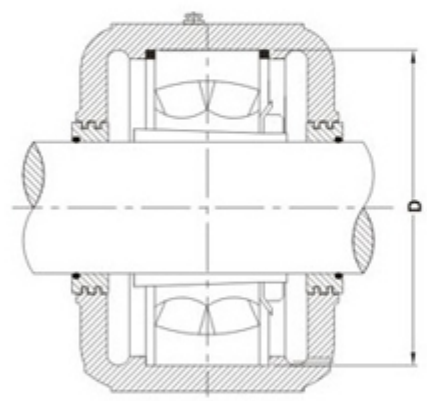

BOTH END OPEN
(TS TYPE)

Shaft dia	DIMENSION IN MM						Approriate Bearing and Adapter Sleeve	1 No. Locating Ring size
d1	Ca	N	N1	G	A2	D		
180	92	52	32	M30	280	310	23040K + H3040	10 x 310
200	100	55	35	M30	300	340	23044K + H3044	10 x 340
220	102	55	35	M30	310	360	23048K + H3048	10 x 360
240	114	60	40	M36	340	400	23052K + H3052	10 x 400
260	116	62	42	M36	360	420	23056K + H3056	10 x 420
280	128	62	42	M36	370	460	23060K + H3060	10 x 460
300	131	62	42	M36	380	480	23064K + H3064	10 x 480
320	143	70	50	M42	410	520	23068K + H3068	10 x 520
340	144	70	50	M42	420	540	23072K + H3072	10 x 540
360	145	70	50	M42	420	560	23076K + H3076	10 x 560

Masta Brand SD Series Plummer Block with Labyrinth collars
For bearing with tapered boer and adapter sleeves

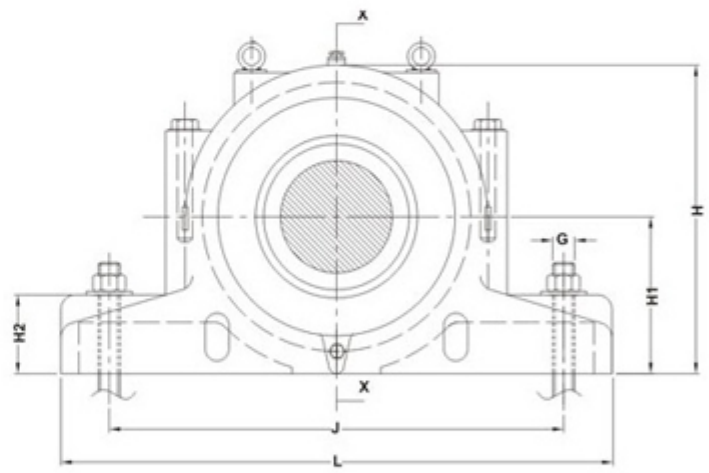

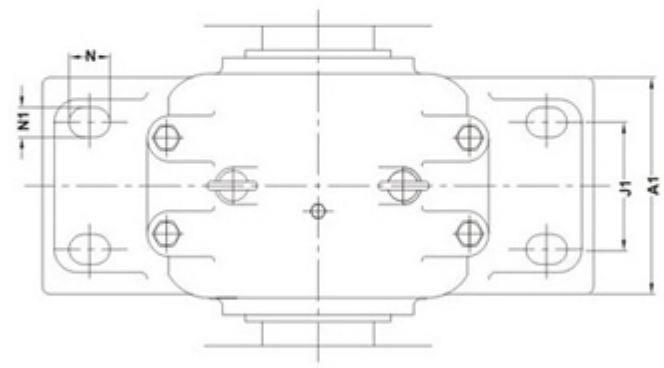

Plummer Block Designation	Shaft dia	DIMENSION IN MM							
	d1	A	A1	A2	H	H1	H2	L	J
SD 3134	150	230	180	240	335	170	70	510	430
SD 3136	160	240	190	250	355	180	75	530	450
SD 3138	170	260	210	270	375	190	80	560	480
SD 3140	180	280	230	290	410	210	85	610	510
SD 3144	200	290	240	300	435	220	90	640	540
SD 3148	220	310	260	320	475	240	95	700	600
SD 3152	240	320	280	330	515	260	100	770	650
SD 3156	260	320	280	330	550	280	105	790	670
SD 3160	280	350	310	360	590	300	110	830	710
SD 3164	300	370	330	380	630	320	115	880	750

(Suffix TS = Labyrinth Seals on both ends
ATS = One Side Laby Seal, other Side Endcover.)

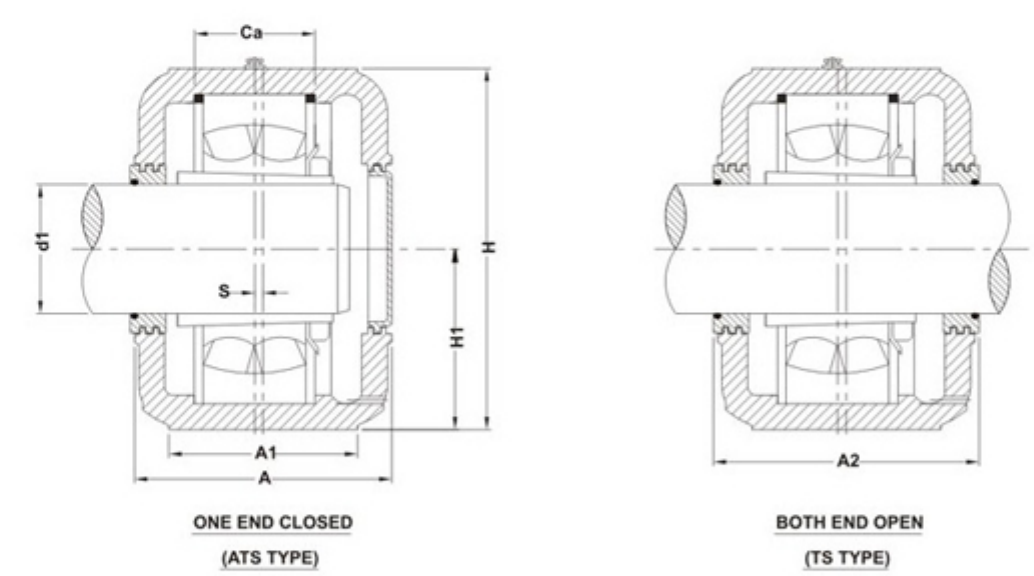

Shaft dia	DIMENSION IN MM						Approriate Bearing and Adapter Sleeve	2 Nos. Locating Ring size	Approx Weight Kg.
d1	J1	S	G	Ca	N	N1			
150	100	14	24	108	34	28	23134 CK+H3134	FRB 10/280	66
160	110	15	24	116	34	28	23136 CK+H3136	FRB 10/300	77
170	120	10	24	124	34	28	23138 CK +H3138	FRB 10/320	97
180	130	10	30	132	42	35	23140 CK+H3140	FRB 10/340	122
200	140	12	30	140	42	35	23144CK+3144A	FRB 10/370	138
220	150	12	30	148	42	35	23148CK+H3148A	FRB 10/400	182
240	160	13	36	164	50	42	23152CK+H3152A	FRB 10/440	217
260	160	16	36	166	50	42	23156CK+H3156A	FRB 10/460	252
280	190	22	36	180	50	42	23160CK+H3160	FRB 10/500	303
300	200	23	36	196	50	42	23164 CK+H3164	FRB 10/540	333

Masta Brand SD 30 Series Plummer Block with Labyrinth collars

For bearing with tapered bore and adapter sleeves

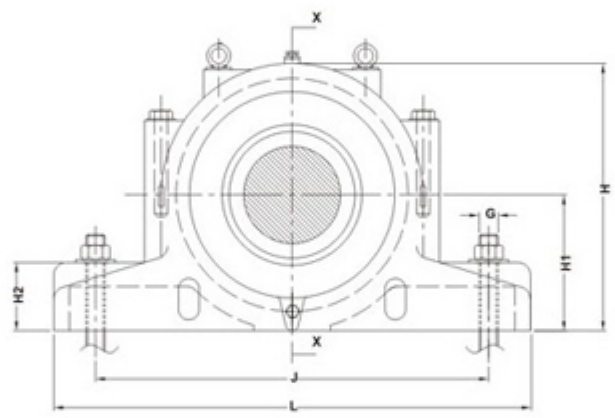

ELEVATION

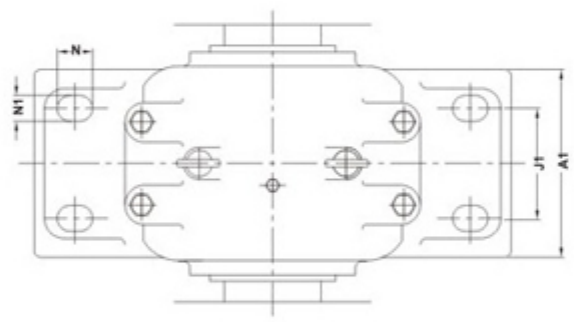

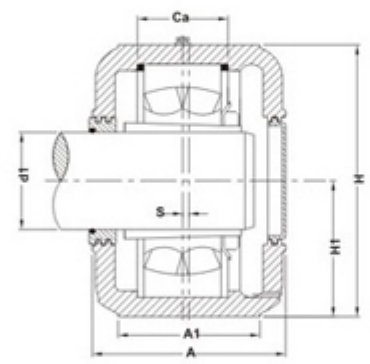

ONE END CLOSED
(ATS TYPE)

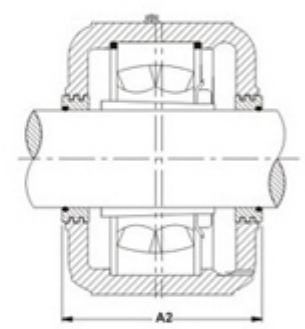

BOTH END OPEN
(TS TYPE)

Housing Only No.	Bearing with Adapter Sleeve No.	DIMENSION IN MM														Locating Ring size Two Nos. Per Housing	Ca Total Bearing Width
		d1	A	A1	A2	H	H1	H2	L	J	J1	S	G	N	N1		
SD 3036	23036 CK + H 3036	160	230	180	240	333	170	70	510	430	100	14	M-24	34	28	10/280	94
SD 3038	23038 CK + H 3038	170	240	190	250	355	180	75	530	450	110	15	M-24	34	28	10/290	95
SD 3040	23040 CK + H 3040	180	260	210	270	375	190	80	560	480	120	10	M-24	34	28	10/310	102
SD 3044	23044 CK + OH 3044 H	200	280	230	290	411	210	85	610	510	130	10	M-30	42	35	10/340	110
SD 3048	23048 CK + OH 3048 H	220	290	240	300	434	220	90	640	540	140	12	M-30	42	35	10/360	112
SD 3052	23052 CK + H 3052	240	310	260	320	475	240	95	700	600	150	12	30	42	35	10/400	124
SD 3056	23056 CK + H 3056	260	320	280	330	515	260	100	770	650	160	13	36	50	42	10/420	126
SD 3060	23060 CK + H 3060	280	320	280	330	550	280	105	790	670	160	16	36	50	42	10/460	138
SD 3064	23064 CK + H 3064	300	350	310	360	590	300	110	830	710	190	22	36	50	42	10/480	141
SD 3068	23068CK + H 3068	320	370	330	380	630	320	115	880	750	200	23	36	50	42	10/520	153
SD 3072	23072 CK + H 3072	340	370	330	380	630	320	115	880	750	200	23	36	50	42	10/540	154
SD 3076	23076 CK + H3076	360	390	350	400	670	340	120	930	790	210	25	36	50	42	10/560	155
SD 3080	23080 CK + H 3080	380	410	350	420	720	365	145	980	840	210	12	36	50	42	10/600	168

Masta®
PRECISION HOUSINGS

Masta Brand SD 500 Series Plummer Block with Felt Seals or with Labyrinth Seals

For bearing with tapered bore and adapter sleeves

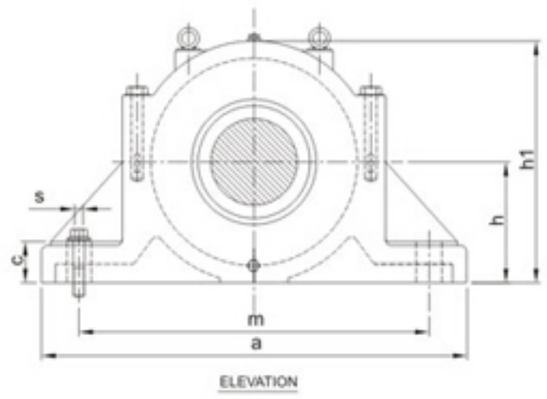

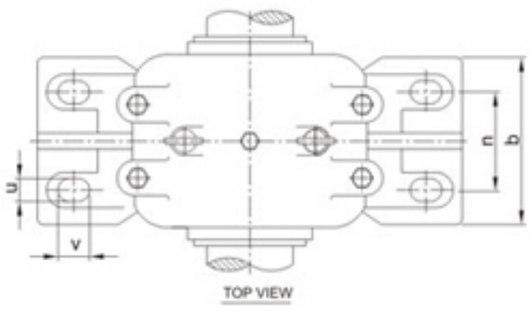

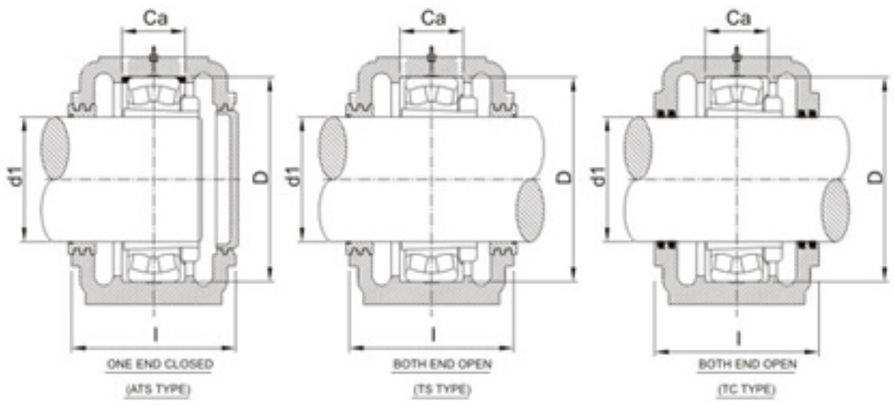

Housing No.	Bearing with Adapter Sleeve No.	DIMENSION IN MM													Locating Ring size Two Nos. Per Housing	Ca Total Bearing Width
		d1	a	b	c	l	h	h1	m	n	v	u	s	D		
SD 530	22230 CK + H 3130	135	550	220	55	240	160	320	450	120	45	33	27	270	10/270	93
SD 532	22232 CK + H 3132	140	580	230	55	250	170	340	480	130	45	33	27	290	10/290	100
SD 534	22234 CK + H 3134	150	620	250	60	270	180	360	510	140	50	36	30	310	10/310	106
SD 536	22236 CK + H 3136	160	650	260	60	280	190	380	540	150	50	36	30	320	10/320	106
SD 538	22238 CK + H 3138	170	700	280	65	290	200	400	570	160	55	40	33	340	10/340	112
SD 540	22240 CK + H 3140	180	740	290	65	300	210	420	610	170	55	40	33	360	10/360	118
SD 544	22244 CK + H 3144	200	820	320	70	330	240	475	680	190	62	42	36	400	10/400	128
SD 548	22248 CK + H 3148	220	880	330	85	340	260	515	740	200	65	45	39	440	10/440	140
SD 552	22252 CK + H 3152	240	940	360	85	370	280	555	790	210	65	45	39	480	10/480	150
SD 556	22256 CK + H 3156	260	990	380	100	390	300	590	830	230	77	52	45	500	10/500	150
SD 560	22260 CK + H 3160	280	1060	400	100	410	325	640	890	250	77	52	45	540	10/540	160

Masta Brand SD 600 Series Plummer Block with Felt Seals or with Labyrinth Seals

For bearing with tapered bore and adapter sleeves

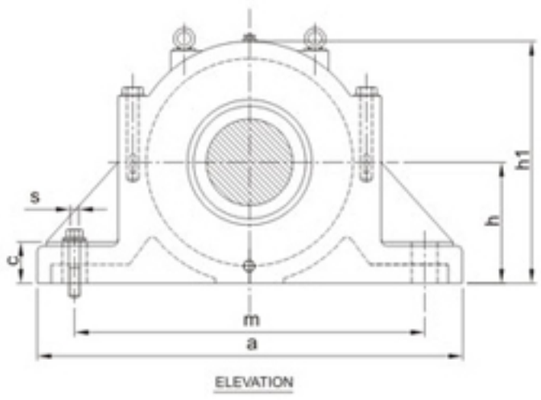

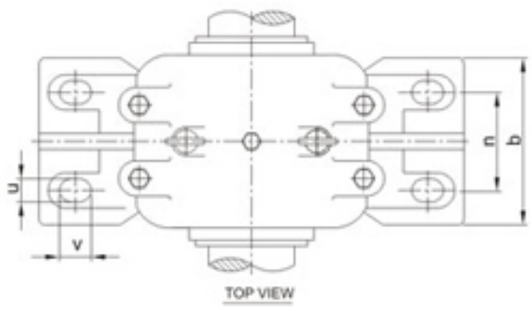

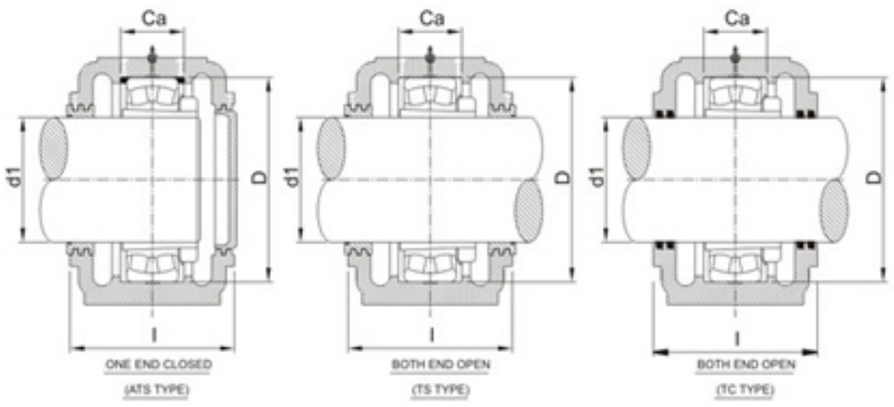

Housing No.	Bearing with Adapter Sleeve No.	DIMENSION IN MM														Locating Ring size Two Nos. Per Housing	Total Bearing Width Ca mm
		d1	a	b	c	l	h	h1	m	n	v	u	s Mm	s inch	D		
SD 628	22328 CK + H 2328	125	580	230	55	250	170	340	480	130	45	33	M 27	1-1/16	300	10/300	122
SD 630	22330 CK + H 2330	135	650	260	60	280	190	380	540	150	50	36	M 30	1-1/8	320	10/320	128
SD 632	22332 CK + H 2332	140	700	280	65	290	200	400	570	160	55	40	M 33	1-1/4	340	10/340	134
SD 634	22334 CK + H 2334	150	740	290	65	300	210	420	610	170	55	40	M 33	1-1/4	360	10/360	140
SD 636	22336 CK + H 2336	160	780	310	70	320	225	450	640	180	62	42	M 36	1-3/8	380	10/380	146
SD 638	22338 CK + H 2338	170	820	320	70	330	240	475	680	190	62	42	M 36	1-3/8	400	10/400	152
SD 640	22340CK + H 2340	180	860	340	85	350	250	500	710	200	65	45	M 39	1-1/2	420	10/420	158
SD 644	22344 CK + H 2344	200	920	350	85	360	280	550	770	210	65	45	M 39	1-1/2	460	10/460	165
SD 648	22348 CK + H 2348	220	990	380	100	390	300	590	830	230	77	52	M 45	1-3/4	500	10/500	175
SD 652	22352 CK + H 2352	240	1060	400	100	410	325	640	890	250	77	52	M 45	1-3/4	540	10/540	185

Masta®
PRECISION HOUSINGS

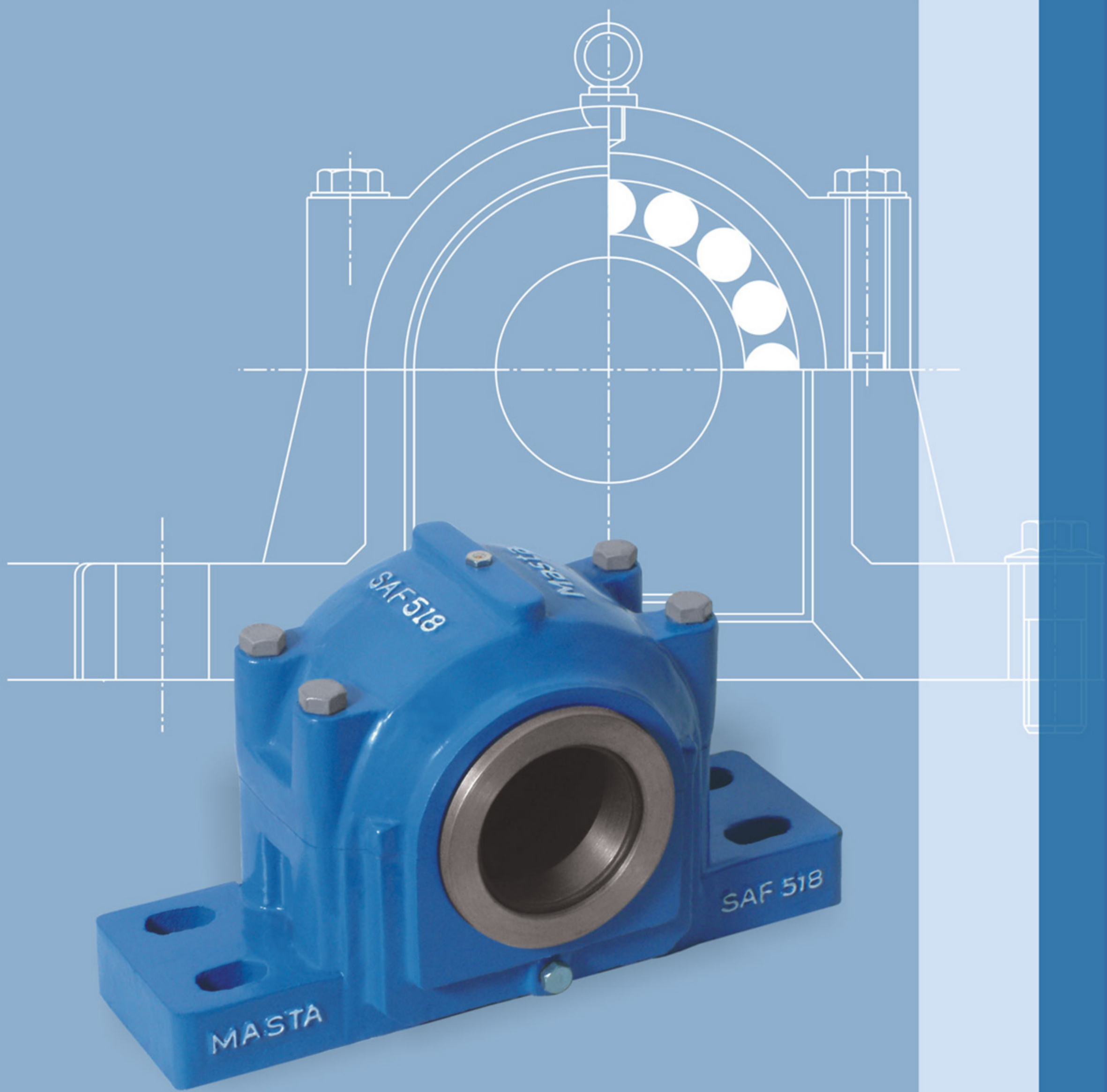

SAF Series

Illustration for SAF Series

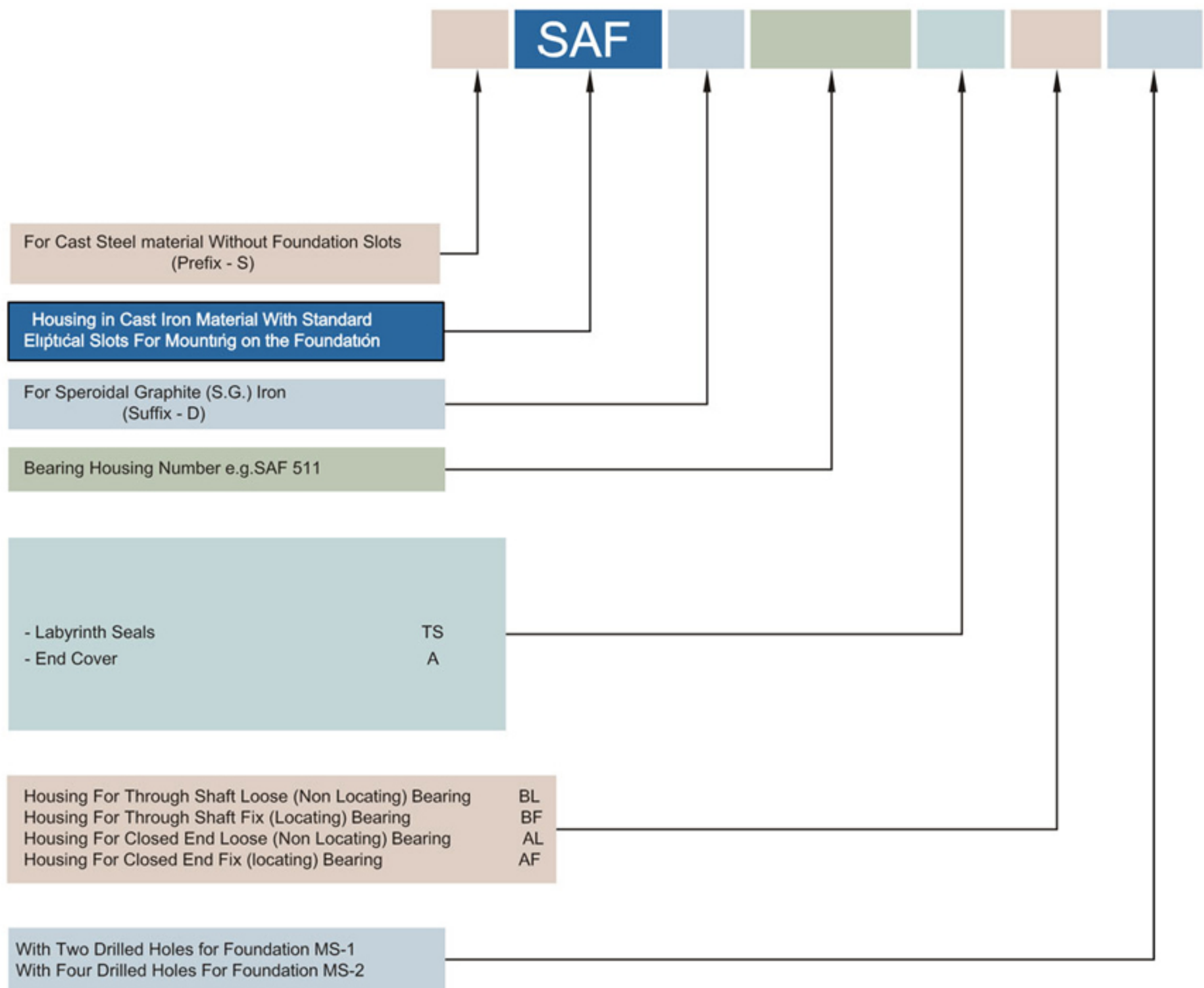

SAF 511 TS BF

SAF type bearing housings are horizontally split type in construction and are available in Cast Iron, Cast Steel or S.G. Iron material as per order. They are suitable to withstand heavier and shock loads due to its robust construction. For efficient sealing and preventing foreign particles to enter in to the bearing housings, triple or double seal type labyrinth rings are provided.

For mounting the plummer blocks on the foundation, two or four elongated bolt holes are provided. For four bolt holes, plummer block designation is prefixed with "F" e.g. FSAF 520 , SAF 200 series are suitable for bearings of series 1200, 2200, 22200 CC and SAF 300 Series are suitable for 1300, 2300, 22300 CC bearings with cylindrical bore SAF 500 series are suitable for 1200 K, 2200 K, 22200 CCK bearings with tapered bore with adapter sleeves. SAF 600 series are suitable for 1300 K, 2300 K and 22300 CCK series bearings.

Masta Brand SAF Series Pillow block for adapter mounting

Plummer Block SAF-524 and above are supplied with Eye bolt on cap.

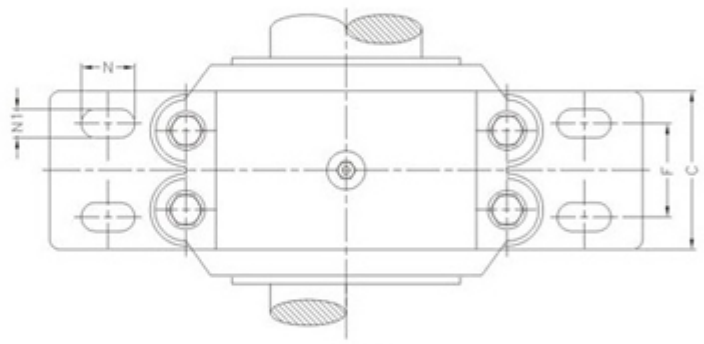

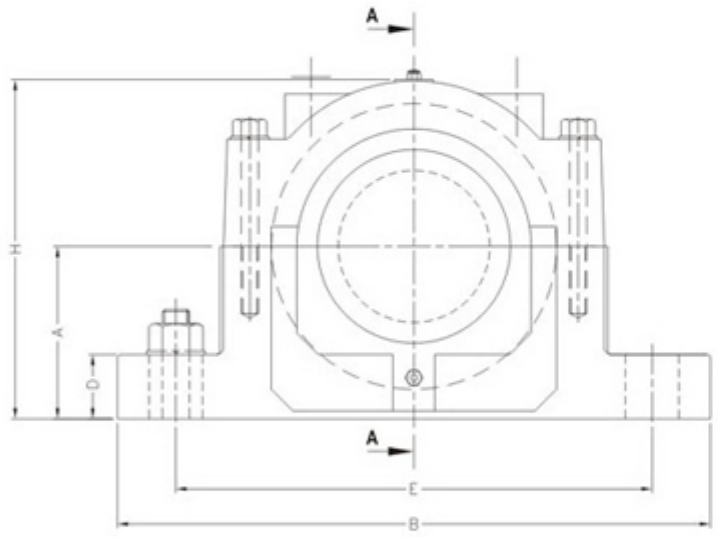

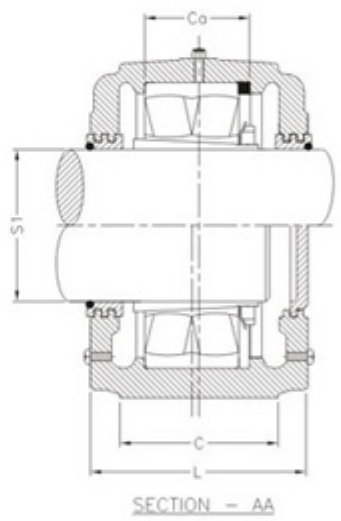

Bearing Housing No.	Shaft dia S1		DIMENSION IN MM										Foundation Bolts(Nos.) mm inch		Ca	Approx Weight kg	Bearing No.	Stabilizing Ring	
	For inch size Brg.	For mm size Brg.	B	E	F	C	D	A	H	L	N	N1						Size	Nos.
SAF 505	19.05	20	165	130	-	45	17.5	38.1	75	73	23	14	12	1/2(2)	28	2.5	1205 K	6.5/52	2
																	2205 K	10/52	1
SAF 506	23.81	25	190	145	-	51	17.5	44.4	86	83	23	14	12	1/2/(2)	30	3	1206K	7/62	2
																	2206K	10/62	1
SAF 507	30.16	30	190	148	-	51	20.6	50.8	97	83	23	14	12	1/2(2)	33	3.7	1207K	8/72	2
																	2207K	10/72	1
SAF 509	36.51	35	210	170	-	60	20.6	57.2	111	92	23	14	12	1/2(2)	33	4.3	1209K	7/85	2
																	2209K	10/85	1
SAF 510	42.86	40	210	170	-	60	23.8	63.5	121	92	23	14	12	1/2(2)	33	5.2	1210K	6.5/90	2
																	2210K	10/90	1
SAF 511	49.21	50	245	195	-	70	23.8	69.8	133	99	23	18	16	5/8(2)	35	6.5	1211K	7/100	2
																	2211K	10/100	1
SAF 512	52.39	55	270	210	-	70	28.6	76.2	148	118	23	18	16	5/8(2)	38	8.7	1212K	8/110	2
																	2212K	10/110	1
SAF 513	55.56	60	280	225	-	80	25.4	76.2	151	114	28	18	16	5/8(2)	41	10	1213K	9/120	2
					51						28	14	12	1/2 (4)			2213K	10/120	1
SAF 515	61.91	65	286	230	-	80	28.6	82.6	162	121	28	18	16	5/8(2)	41	11.5	1215K	8/130	2
					48						28	14	12	1/2 (4)			2215K	10/130	1
																	22215K	10/130	1

Masta®
PRECISION HOUSINGS

Masta Brand SAF Series Pillow block for adapter mounting

Plummer Block SAF-524 and above are supplied with Eye bolt on cap.

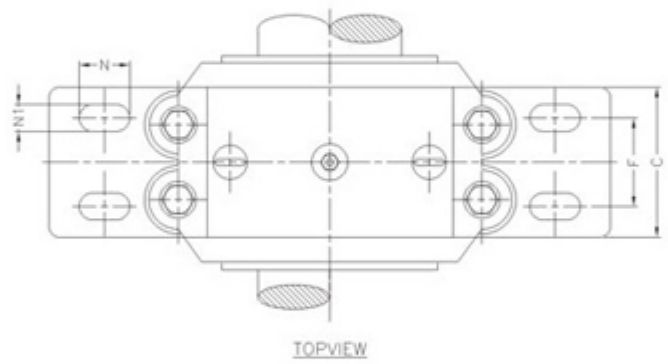

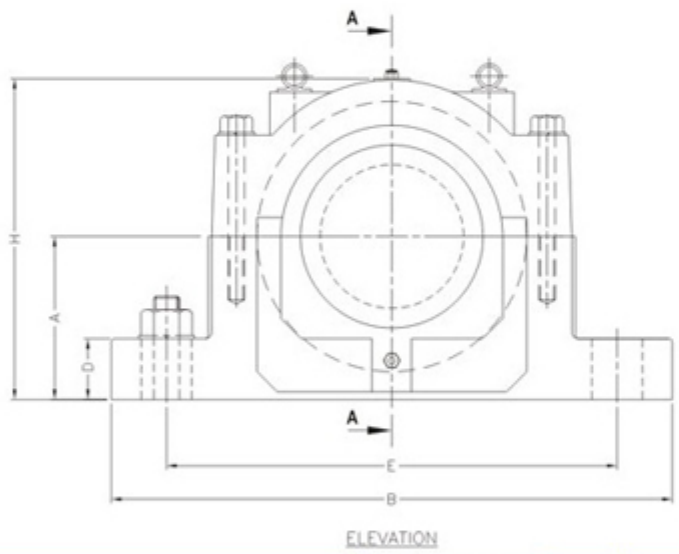

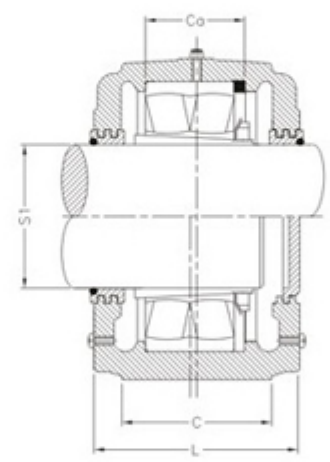

Bearing Housing No.	Shaft dia S1		DIMENSION IN MM										Foundation Bolts(Nos.) mm inch		Ca	Approx Weight kg	Bearing No.	Stabilizing Ring Size	Nos.
	For inch size Brg.	For mm size Brg.	B	E	F	C	D	A	H	L	N	N1							
SAF 516	68.26	70	330	260	54	90	30.2	88.9	175	124	35	22	20	3/4(2)	43	15.0	1216K	8.5/140	2
											35	18	16	5/8(4)			2216K	10/140	1
																	22216CCK	10/140	1
SAF 517	74.61	75	330	265	54	90	31.8	95.2	185	127	35	22	20	3/4(2)	46	16.5	1217K	9/150	2
											35	18	16	5/8(4)			2217K,22217CCK	10/150	1
SAF 518	80.96	80	350	280	54	99	38.1	101.6	197	146	32	22	20	3/4(2)	50	20.5	1218K	10/160	2
											32	18	16	5/8(4)			2218K,22218CCK	10/160	1
SAF 519	83.41	85	362	295	54	99	44.4	108.0	210	150	32	22	20	3/4(2)	53	26	1219K	10.5/170	2
											32	18	16	5/8(4)			2219K,22219CCK	10/170	1
SAF 520	87.31	90	388	315	60	111	44.4	114.3	222	156	42	26	22	7/8(2)	56	34.0	1220K	11/180	2
											42	22	20	3/4(4)			22220CCK	10/180	1
SAF 522	100.01	100	419	345	70	121	50.8	125.4	245	165	42	22	20	3/4(4)	63	44.5	1222K	12.5/200	2
																	22222CCK	10/200	1
SAF 524	106.36	110	419	352	70	121	54.0	133.4	261	188	42	22	20	3/4(4)	68	55	22224CCK	10/215	1
SAF 526	112.71	115	467	390	82.6	130	60.3	152.4	294	200	40	26	22	7/8(4)	74	73	22226CCK	10/230	1
SAF 528	125.41	125	511	421	85.7	150	60.3	152.4	300	195	40	28	24	1(4)	78	80	22228CCK	10/250	1

Masta Brand SAF Series Pillow block for adapter mounting

Plummer Block SAF 524 and above are supplied with Eye bolt on cap.

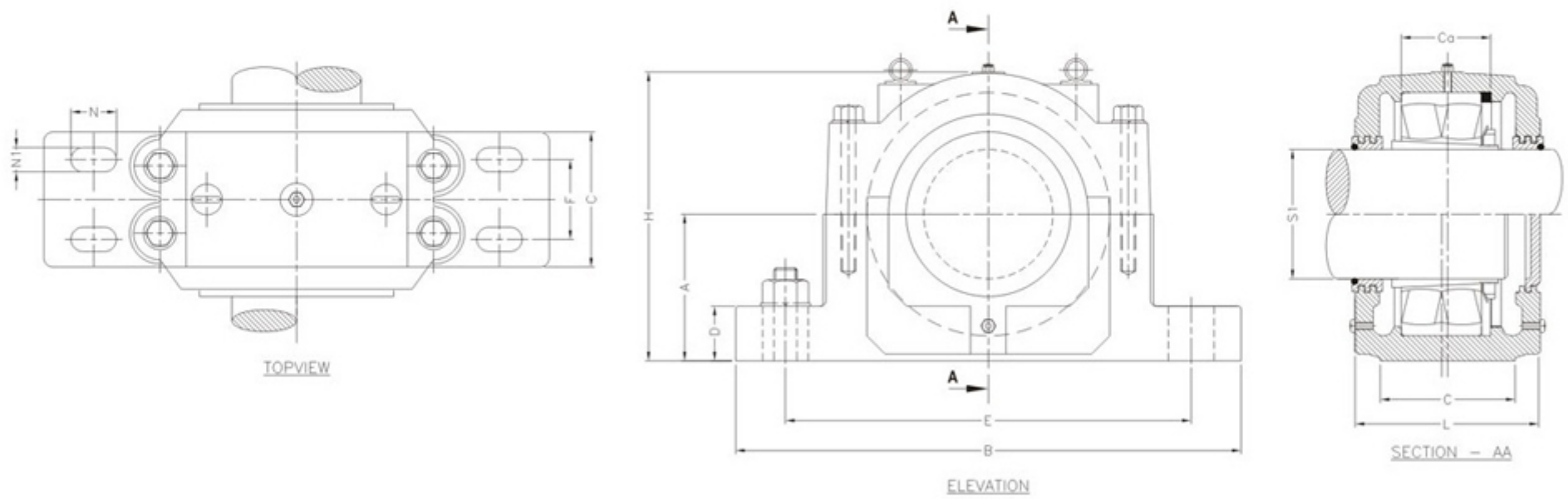

Bearing Housing No.	Shaft dia S1		DIMENSION IN MM										Foundation Bolts(Nos.)		Ca	Approx Weight kg	Bearing No.	Stabilizing Ring	
	inch	mm	B	E	F	C	D	A	H	L	N	N1	inch	mm					
SAF 530	131.76	135	540	450	95.2	160	63.5	160.3	318	213	42	28	24	1 (4)	83	101.0	22230CCK	10/270	1
SAF 532	138.11	140	560	465	95.2	160	66.7	169.9	338	222	48	28	24	1(4)	90	111	22232CCK	10/290	1
SAF 534	150.81	150	630	520	108.0	172	69.8	179.4	360	245	54	28	24	1 (4)	96	141	22234CCK	10/310	1
SAF 536	163.51	160	680	565	117.5	181	76.2	190.5	378	254	60	28	24	1 (4)	96	156	22236CCK	10/320	1
SAF 538	176.21	175	712	585	114.3	190	79.4	200	400	273	65	35	30	1.1/4 (4)	102	181	22238CCK	10/340	1
SAF 540	182.56	180	750	605	127.0	203	85.7	209.5	419	286	65	35	30	1.1/4 (4)	108	222	22240CCK	10/360	1
SAF 544	201.61	200	832	670	133.4	222	95.2	241.3	475	305	80	42	36	1.3/8 (4)	118	307	22244CCK	10/400	1

Masta®
PRECISION HOUSINGS

Masta Brand SAF Series Pillow block for adapter mounting

Plummer Block SAF 620 and above are supplied with Eye bolt on cap.

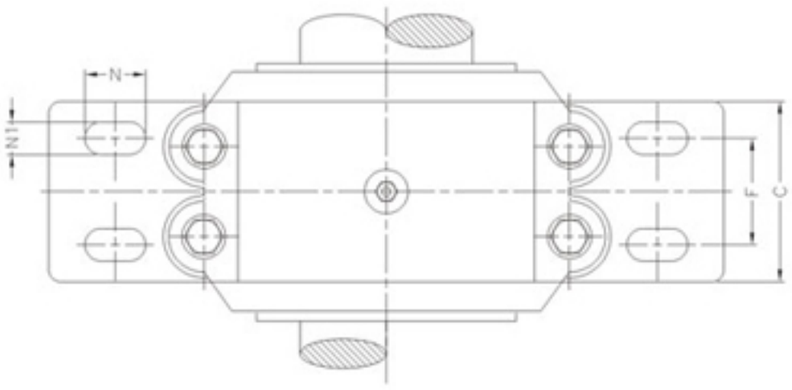

TOPVIEW

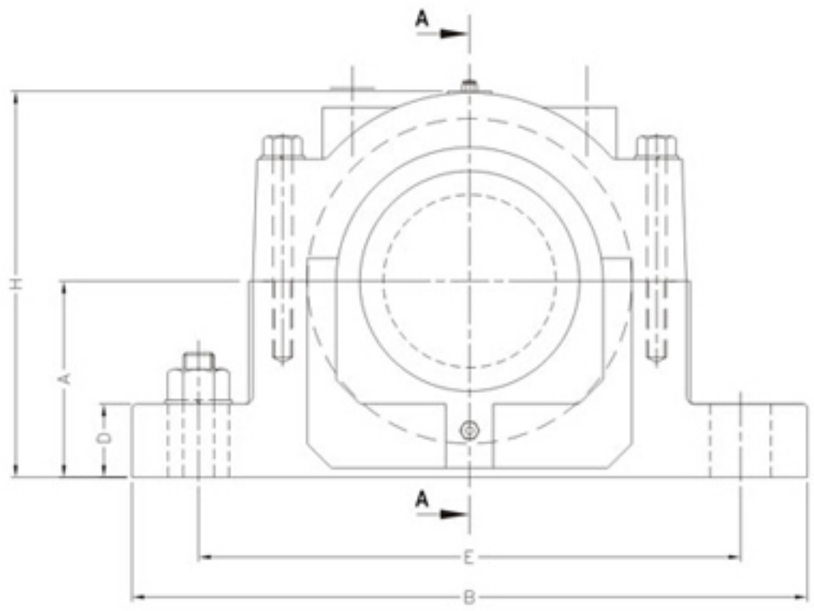

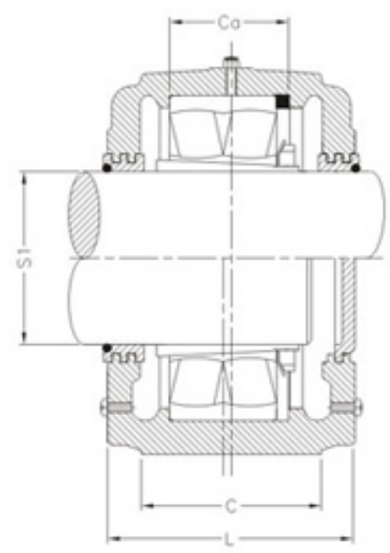

SECTION – AA

Bearing Housing No.	Shaft dia S1	DIMENSION IN MM										Foundation Bolts(Nos.) mm inch		Ca	Approx Weight kg	Bearing No.	Stabilizing Ring	
		B	E	F	C	D	A	H	L	N	N1							
SAF 605	19.05	190	145	—	51	17.5	44.4	86	93	23	15	12	1/2(2)	34	3.2	1305K	8.5/62	2
																2305K	10/62	1
SAF 606	23.81	190	148	—	51	20.6	50.8	97	93	23	15	12	1/2(2)	37	3.8	1306K	9/72	2
																2306K	10/72	1
SAF 608	30.16	210	170	—	60	25.4	63.5	122	102	23	15	12	1/2(2)	43	5.5	1308K	10/90	2
																22308CCK	10/90	1
SAF 609	36.51	245	195	—	70	25.4	69.8	135	108	23	18	16	5/8(2)	46	8.0	1309K	10.5/100	2
																22309CCK	10/100	1
SAF 610	42.86	270	210	—	70	28.6	76.2	148	118	32	18	16	5/8(2)	50	10.5	1310K	11.5/110	2
																22310CCK	10/110	1
SAF 611	49.21	280	225	—	80	30.2	82.6	157	124	32	18	16	5/8(2)	53	12.5	1311K	12/120	2
				51								12	1/2(4)			22311CCK	10/120	1
SAF 612	52.39	286	230	—	80	30.2	82.6	162	133	32	18	16	5/8(2)	56	15.6	1312K	12.5/130	2
				48								12	1/2(4)			22312CCK	10/130	1
SAF 613	55.56	330	260	—	90	31.8	88.9	176	137	37	22	20	3/4(2)	58	18	1313K	12.5/140	2
				54								16	5/8(4)			22313CCK	10/140	1
SAF 614	60.00	330	265	—	90	31.8	95.2	187	137	37	22	20	3/4(2)	61	22.1	1314K	13/150	2
				54								16	5/8(4)			22314CCK	10/150	1
SAF 615	61.91	350	280	—	99	41.3	102	197	159	37	22	20	3/4(2)	65	25.5	1315K	14/160	2
				54								16	5/8(4)			22315CCK	10/160	1

Masta®
PRECISION HOUSINGS

SAF Series

Masta Brand SAF Series Pillow block for adapter mounting

Plummer Block SAF 620 and above are supplied with Eye bolt on cap.

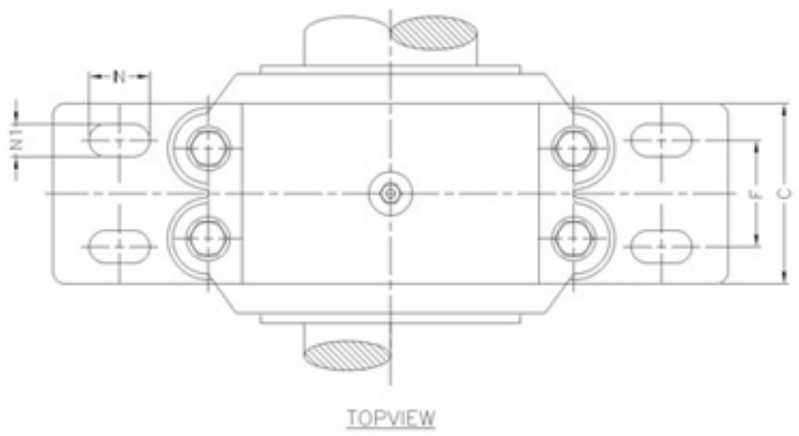

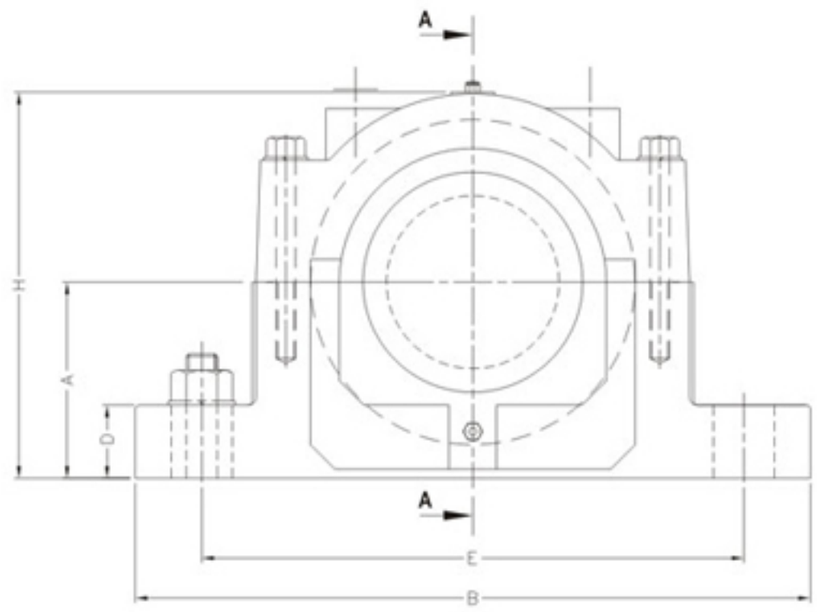

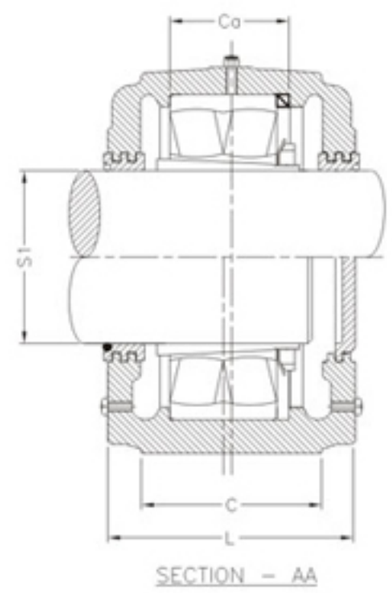

Bearing Housing No.	Shaft dia S1	DIMENSION IN MM										Foundation Bolts(Nos.) mm inch		Ca	Approx Weight kg	Bearing No.	Stabilizing Ring	
		B	E	F	C	D	A	H	L	N	N1							
SAF 616	68.26	362	295	__	99	44.4	108.0	210	165	45	22	20	3/4(2)	68	30.5	1316K	14.5/170	2
				54								16	5/8(4)			22316CCK	10/170	1
SAF 617	74.61	388	315	__	111	44.4	114.3	222	171	45	26	24	7/8(2)	70	40	1317K	14.5/180	2
				60								20	3/4(4)			22317CCK	10/180	1
SAF 618	80.96	395	325	57	111	50.8	120.6	234	175	39	22	20	3/4(4)	74	44.5	1318K	15.5/190	2
																22318CCK	10/190	1
SAF620	87.31	419	352	70	121	54.0	133.4	261	187	36	22	20	3/4(4)	83	57	22320CCK	10/215	1
SAF 622	100.01	467	390	83	130	60.2	152.4	292	203	42	26	24	7/8(4)	90	76	22322CCK	10/240	1
SAF 624	106.36	540	448	95	159	63.5	160.3	318	213	40	28	24	1(4)	96	101	22324CCK	10/260	1
SAF 626	112.71	560	465	95	159	66.7	169.9	338	222	48	28	24	1(4)	103	121	22326CCK	10/280	1
SAF 628	125.41	630	520	108	171	69.8	179.4	360	238	52	28	24	1(4)	112	151	22328CCK	10/300	1
SAF 630	131.76	680	565	118	181	76.2	190.5	378	248	58	28	24	1(4)	118	172	22330CCK	10/320	1
SAF 632	138.11	710	585	114	191	79.4	200.0	400	273	65	35	30	1.1/4(4)	124	196	22332CCK	10/340	1
SAF 634	150.81	750	603	127	203	85.7	209.6	419	286	65	35	30	1.1/4(4)	130	236	22334CCK	10/360	1
SAF 636	163.51	795	645	133	210	88.9	225.4	470	286	65	35	30	1.1/4(4)	136	272	22336CCK	10/380	1
SAF 638	176.21	830	668	133	222	95.25	241.3	498	305	70	42	36	1.3/8(4)	142	322	22338CCK	10/400	1
SAF 640	182.56	870	710	140	229	101.6	250.8	513	311	70	42	36	1.3/8(4)	148	350	22340CCK	10/420	1

Masta® PRECISION HOUSINGS

Low Block Straight bore Mounting

Plummer Block SAF 224 and above are supplied with Eye bolt on cap.

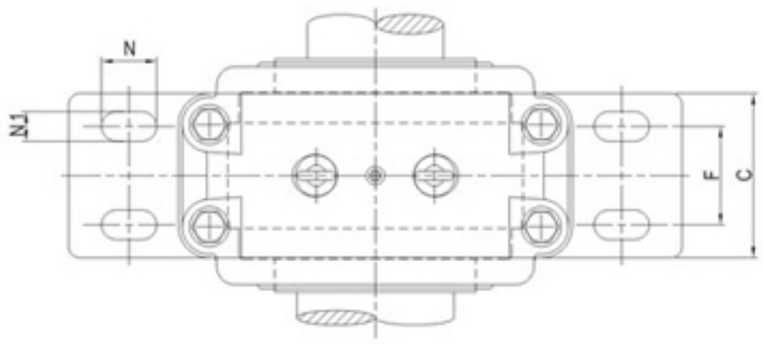

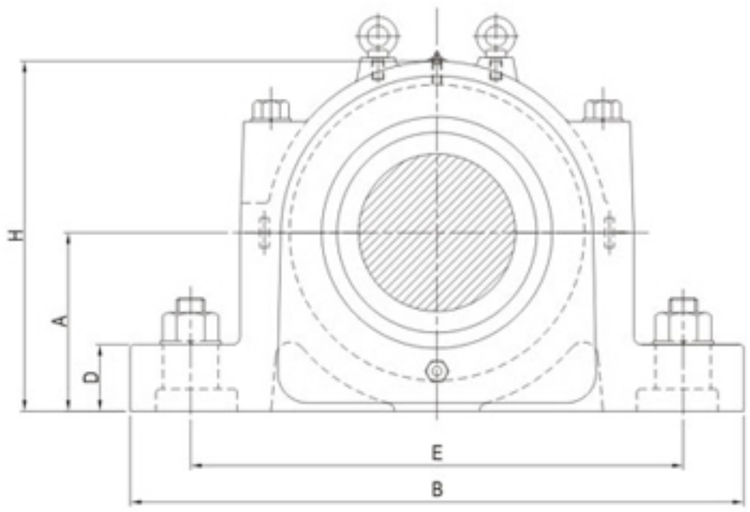

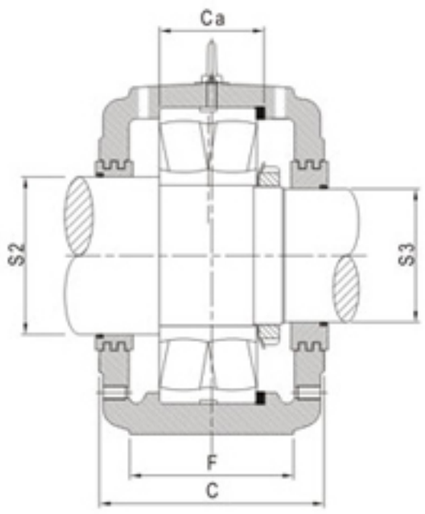

Bearing Housing No.	Shaft Diameter S2 inch	Shaft Diameter S2 mm	Shaft Diameter S3 inch	Shaft Diameter S3 mm	DIMENSION IN MM B	E	F	C	D	A	H	L	N	N1	Foundation Bolts(Nos.) mm	Foundation Bolts(Nos.) inch	Ca	Approx Weight kg	Bearing No.	Stabilizing Ring Size Nos.	
SAF 216	3.5/8	92.08	3	76.2	330	260	—	90	30.2	88.9	175	124	35	22	20	3/4(2)	43	15	1216	8.5/140	2
							54						35	18	16	5/8(4)			2216,22216CC	10/140	1
SAF 217	3.15/16	100.01	3.3/16	80.96	330	265	—	90	31.8	95.2	185	127	35	22	20	3/4(2)	46	16.5	1217	9/150	2
							54						35	18	16	5/8(4)			2217,22217CC	10/150	1
SAF 218	4.1/8	104.78	3.3/8	85.72	350	280	—	99	38.1	101.6	197	146	32	22	20	3/4(2)	50	20.5	1218	10/160	2
							54						32	18	16	5/8(4)			2218,22218CC	10/160	1
SAF 219	4.1/4	107.95	3.9/16	90.48	362	295	—	99	44.4	108	210	150	32	22	20	3/4(2)	53	27.5	1219	10.5/170	2
							54						32	18	16	5/8(4)			2219,22219CC	10/170	1
SAF220	4.1/2	114.30	3.13/16	96.84	388	315	—	111	44.4	114.3	222	156	42	26	22	7/8(2)	56	34	1220	11/180	2
							60						42	20	22	3/4(4)			22220CC	10/180	1
SAF222	4.7/8	123.82	4.3/16	106.36	419	345	70	121	50.8	125.4	245	165	42	22	20	3/4(4)	63	44.5	1222	12.5/200	2
																			22222 CC	10/200	1
SAF 224	5.5/16	134.94	4.9/16	115.89	419	352	70	121	54.0	133.4	261	188	42	22	20	3/4(4)	68	55	22224CC	10/215	1
SAF 226	5.7/8	149.22	4.15/16	125.41	467	390	82.6	130	60.3	152.4	294	200	40	26	22	7/8(4)	74	73	22226CC	10/230	1
SAF 228	6.1/4	158.75	5.5/16	134.95	511	421	85.7	150	60.3	152.4	300	195	40	28	24	1(4)	78	80	22228CC	10/250	1
SAF 230	6.5/8	168.28	5.3/4	146.05	540	450	95.2	160	63.5	160.3	318	213	42	28	24	1(4)	83	101	22230CC	10/270	1

Masta Brand SAF Series Pillow block Suitable for Straight Bore Mounting

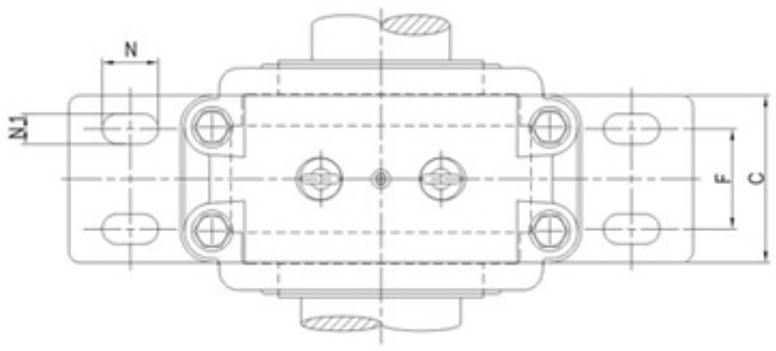

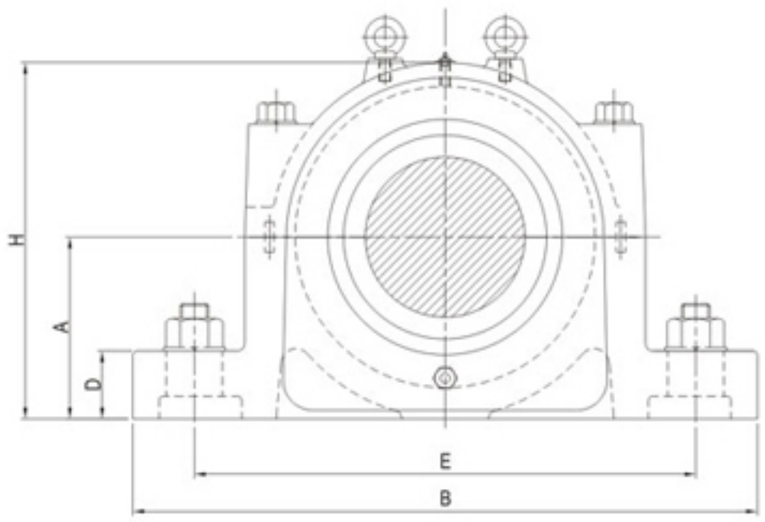

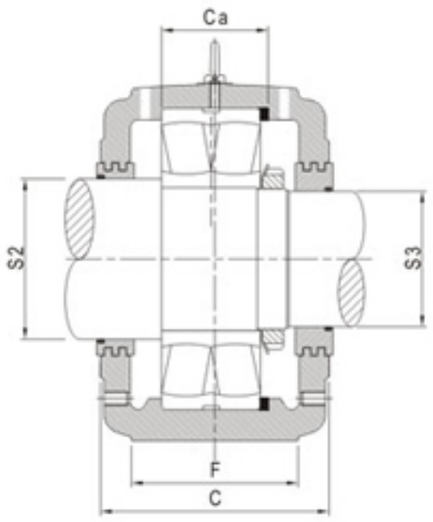

Bearing Housing No.	Shaft Diameter				DIMENSION IN MM										Foundation Bolts(Nos.)		Ca	Approx Weight kg	Bearing No.	Stabilizing Ring	
	S2		S3																		
	inch	mm	inch	mm	B	E	F	C	D	A	H	L	N	N1	mm	inch					
SAF 232	7	177.80	6.1/16	153.99	560	465	95.2	160	66.7	169.9	338	222	48	28	24	1(4)	90	111	22232CC	10/290	1
SAF 234	7.7/16	188.91	6.7/16	163.51	630	520	108.0	172	69.8	179.4	360	245	54	28	24	1(4)	96	141	22234CC	10/310	1
SAF 236	7.13/16	198.44	6.7/8	174.62	680	565	117.5	181	76.2	190.5	378	254	60	28	24	1(4)	96	156	22236CC	10/320	1
SAF 238	8.3/8	212.72	7.1/4	184.15	712	585	114.3	190	79.4	200.0	400	273	65	35	30	1.1/4(4)	102	181	22238CC	10/340	1
SAF 240	8.3/4	222.25	7.5/8	193.68	750	605	127.0	203	85.7	209.6	419	286	65	35	30	1.1/4(4)	108	222	22240CC	10/360	1
SAF 244	9.9/16	242.89	8.5/16	211.14	832	670	133.4	222	95.2	241.3	475	305	80	42	40	1.1/2(4)	118	307	22244CC	10/400	1

Masta®
PRECISION HOUSINGS

Masta Brand SAF Series Pillow block Suitable for Straight Bore Mounting

Plummer Block SAF 320 and above are supplied with Eye bolt on cap.

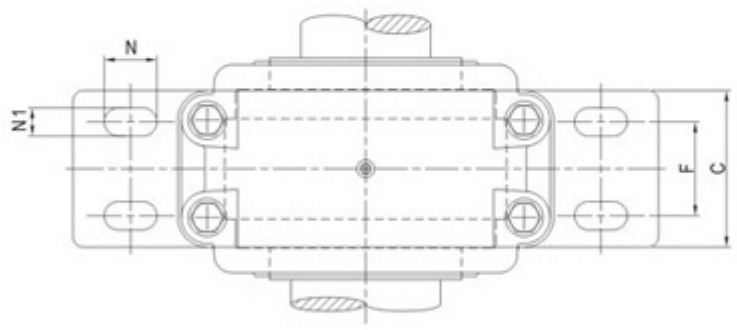

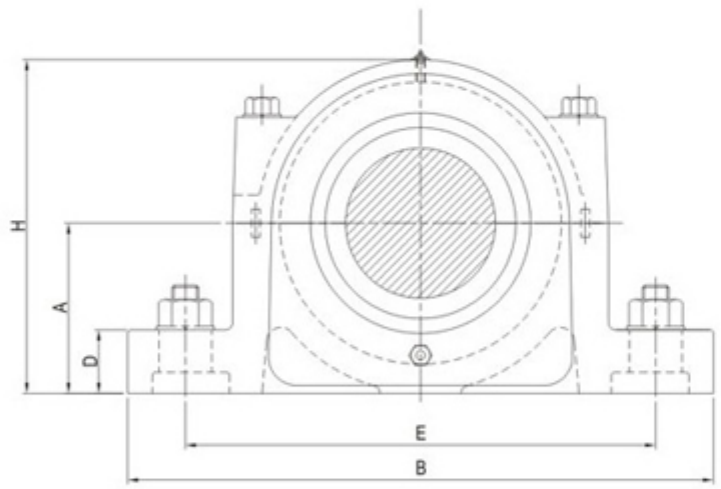

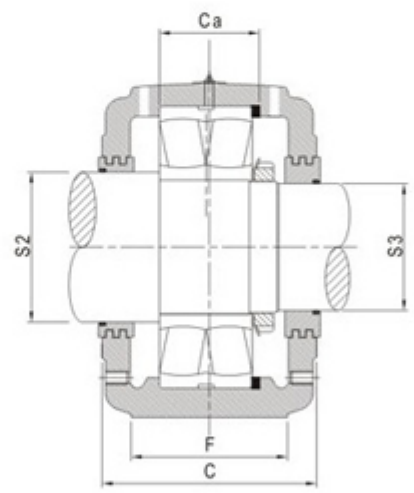

Bearing Housing No.	Shaft Diameter S2 inch	Shaft Diameter S2 mm	Shaft Diameter S3 inch	Shaft Diameter S3 mm	DIMENSION IN MM B	E	F	C	D	A	H	L	N	N1	Foundation Bolts(Nos.) mm	Foundation Bolts(Nos.) inch	Ca	Approx Weight kg	Bearing No.	Stabilizing Ring	
SAF 308	1.15/16	49.21	1.7/16	36.51	210	170	—	60	25.4	63.5	122	102	23	15	12	1/2(2)	43	6.5	1308	10/90	2
																			22308CC	10/90	1
SAF 309	2.1/8	53.98	1.11/16	42.86	245	195	—	70	25.4	69.8	135	108	23	18	16	5/8(2)	46	8	1309	10.5/100	2
																			22309CC	10/100	1
SAF 310	2.3/8	60.32	1.7/8	47.62	270	210	—	70	28.6	76.2	148	118	32	18	16	5/8(2)	50	105	1310	11.5/110	2
																			22310CC	10/110	1
SAF 311	2.9/16	65.09	2.1/16	52.39	280	225	—	80	30.2	82.6	157	124	32	18	16	5/8(2)	53	12.5	1311	12/120	2
							51	80					32	18	12	1/2(4)			22311CC	10/120	1
SAF 312	2.7/8	73.02	2.1/4	57.15	286	230	—	80	30.2	82.6	162	133	32	18	16	5/8(2)	56	15.6	1312	12.5/130	2
							48	80					32	18	12	1/2(4)			22312CC	10/130	1
SAF 313	3.1/16	77.79	2.7/16	61.91	330	260	—	90	31.8	88.9	176	137	37	22	20	3/4(2)	58	18	1313	12.5/140	2
							54	90					37	22	16	5/8(2)			22313CC	10/140	1
SAF 314	3.1/4	82.55	2.5/8	66.68	330	265	—	90	31.8	95.2	187	137	37	22	20	3/4(2)	61	22.4	1314	13/150	2
							54	90					37	22	16	5/8(4)			22314CC	10/150	1
SAF 315	3.7/16	87.31	2.13/16	71.44	350	280	—	99	41.3	101.6	197	159	37	22	20	3/4(2)	65	25.5	1315	14/160	2
							54	99					37	22	16	5/8(4)			22315CC	10/160	1
SAF 316	3.5/8	92.08	3	76.20	362	295	_	99	44.4	108.0	210	165	45	22	20	3/4(2)	68	30.5	1316	14.5/170	2
							54	99					45	22	16	5/8(4)			22316CC	10/170	1
SAF 317	3.15/16	100.01	3.3/16	80.96	388	315	_	111	44.4	114.3	222	171	45	26	24	1(2)	70	40	1317	14.5/180	2
							60						45	26	20	3/4(4)			22317CC	10/180	1

Masta®
PRECISION HOUSINGS

SAF Series

Masta Brand SAF Series Pillow block Suitable for Straight Bore Mounting

Plummer Block SAF 320 and above are supplied with Eye bolt on cap.

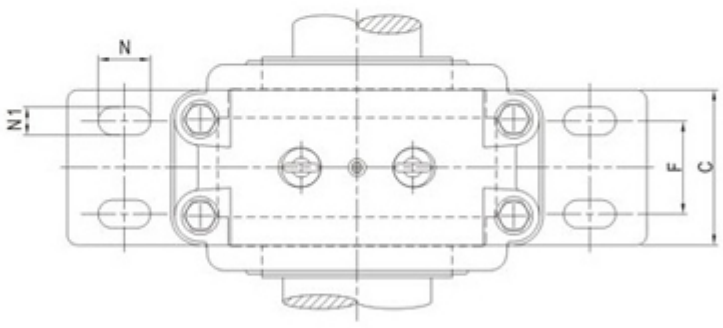

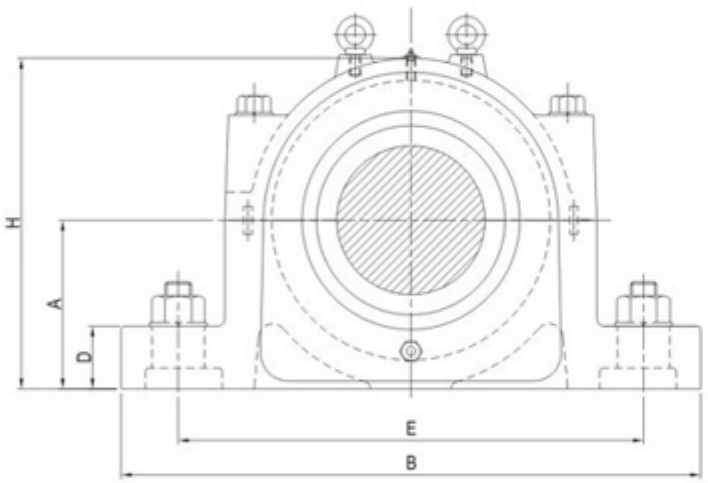

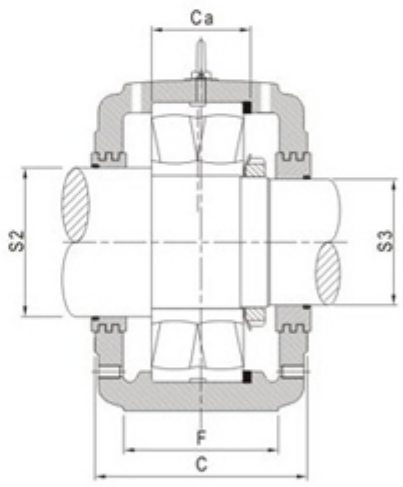

Bearing Housing No.	Shaft Diameter S2 inch	Shaft Diameter S2 mm	Shaft Diameter S3 inch	Shaft Diameter S3 mm	DIMENSION IN MM B	E	F	C	D	A	H	L	N	N1	Foundation Bolts(Nos.) Mm	Foundation Bolts(Nos.) inch	Ca	Approx Weight kg	Bearing No.	Stabilizing Ring	
SAF 318	4.1/8	104.8	3.3/8	85.72	395	325	57	111	50.8	120.6	234	175	39	22	20	3/4(4)	74	44.5	1318	15.5/190	2
																			22318CC	10/190	1
SAF 320	4.1/2	114.30	3.13/16	96.84	419	352	70	121	54.0	133.4	261	187	36	22	20	3/4(4)	83	57	22320CC	10/215	1
SAF 322	4.7/8	123.82	4.3/16	106.36	467	390	83	130	60.2	152.4	292	203	42	26	24	7/8(4)	90	76	22322CC	10/240	1
SAF 324	5.5/16	134.94	4.9/16	115.89	540	448	95	159	63.5	160.3	318	213	40	28	24	1(4)	96	101	22324CC	10/260	1
SAF 326	5.7/8	149.22	4.15/16	125.41	560	465	95	159	66.7	169.9	338	222	48	28	24	1(4)	103	121	22326CC	10/280	1
SAF 328	6.1/4	158.75	5.5/16	134.94	630	520	108	171	69.8	179.4	360	238	52	28	24	1(4)	112	151	22328CC	10/300	1
SAF330	6.5/8	168.28	5.3/4	146.05	680	565	118	181	76.2	190.5	378	248	58	28	24	1(4)	118	172	22330CC	10/320	1
SAF332	7	177.80	6.1/16	153.99	710	585	114	191	79.4	200.0	400	273	65	35	30	1.25(4)	124	196	22332CC	10/340	1
SAF334	7.7/16	188.91	6.7/16	163.51	750	603	127	203	85.7	209.6	419	286	65	35	30	1.25(4)	130	236	22334CC	10/360	1
SAF 336	7.13/16	198.44	6.7/8	174.62	795	645	133	210	88.9	225.4	470	286	65	35	30	1.25(4)	136	267	22336CC	10/380	1
SAF338	8.3/8	212.72	7.1/4	184.15	830	668	133	222	95.3	241.3	498	305	70	42	36	1.5(4)	142	322	22338CC	10/400	1
SAF 340	8.3/4	222.25	7.5/8	193.68	870	710	140	229	102	250.8	513	311	70	42	36	1.5(4)	148	350	22340CC	10/420	1

Masta®
PRECISION HOUSINGS

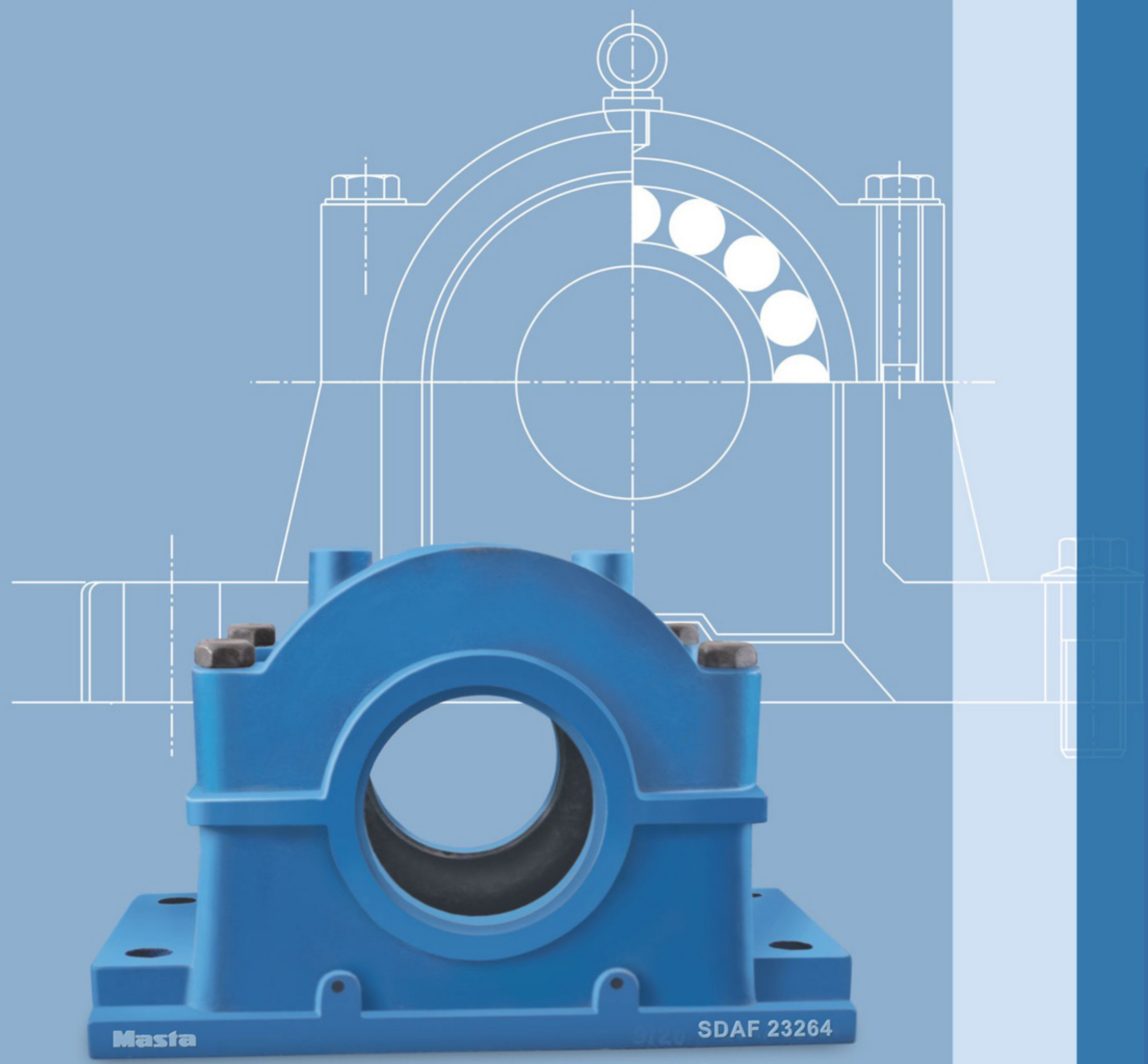

SDAF Series

Illustrated for SDAF Series

SDAF Series Plummer Blocks are suitable for inch size shafts. The bearing housings are having robust contraction suitable for heavy impact and thrust loads. The housings can be supplied even for MM size shafts by replacing the labyrinth collars.

Bearing Housings can be supplied with labyrinth seals or taconite seals.

- For bearing with adaptor sleeves or for straight bore bearings.
- For Grease Lubrication

  or
- For Oil Lubrication

In Cast Iron / S.G.Iron / Cast Steel material

SDAF type bearing housings are horizontally split type in construction and are available in Cast Iron, Cast Steel or S.G. Iron material as per order. They are suitable to withstand heavier and shock loads due to its robust construction. For efficient sealing and preventing foreign particles to enter in to the bearing housings, triple or double seal type labyrinth rings are provided.

For mounting the plummer blocks on the foundation, two or four elongated bolt holes are provided. For four bolt holes, plummer block designation is prefixed with "F" e.g. FSDAF 520 SDAF 200 series are suitable for bearings of series 1200, 2200, 22200 CC and SDAF 300 Series are suitable for 1300, 2300, 22300 CC bearings with cylindrical bore SDAF 500 series are suitable for 1200 K, 2200 K, 22200 CCK bearings with tapered bore with adapter sleeves. SDAF 600 series are suitable for 1300 K, 2300 K and 22300 CCK series.

SDAF 200 Series Pillow block Housing Suitable for 22200 CC (Straight Bore Bearing)

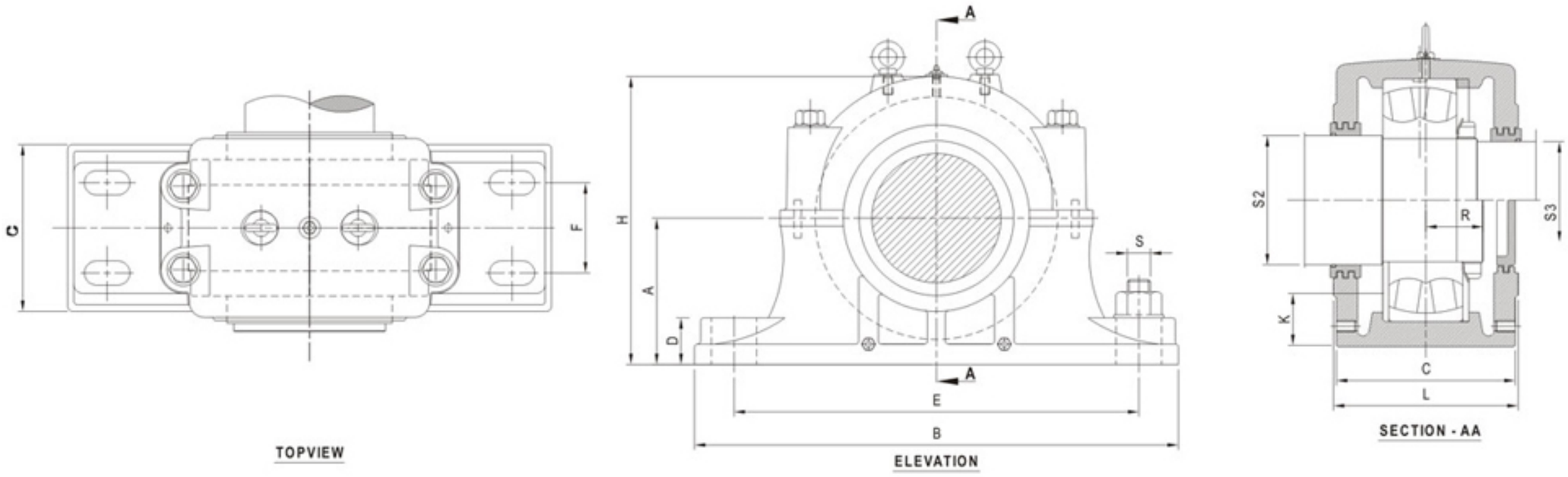

Pillow Block Housing Designation	Shaft Dia. S-2 mm	Shaft Dia. S-3 mm	Bearing Designation	A mm	B mm	C mm	D mm	E Max. mm	E Min. mm	F mm	H mm	Static Oil Leve K mm	L mm	Bolts (No. Req'd) inches	Approx Weight kg.	R mm
SDAF 220	114.3	96.84	22220 CC/W33	114.3	387.4	152.4	47.6	333.4	295.3	85.7	227	42.1	171.4	(4)-3/4	34.5	48.8
SDAF 222	123.82	106.36	22222 CC/W33	125.4	419.1	171.4	54	368.3	320.7	101.6	250.8	46	184.2	(4)-7/8	45.5	54
SDAF 224	134.94	115.89	22224 CC/W33	133.4	419.1	174.6	57.2	368.3	336.6	104.8	266.7	46.8	187.3	(4)-7/8	54.5	57.9
SDAF 226	149.22	125.41	22226 CC/W33	152.4	466.7	190.5	60.3	406.4	371.5	114.3	301.6	59.5	203.2	(4)-1	72.5	62.7
SDAF 228	158.75	134.93	22228 CC/W33	152.4	511.17	190.5	60.3	463.4	377.8	114.3	306.3	54	182.5	(4)-1	79.5	66.3
SDAF 230	168.28	146.05	22230 CC/W33	160.3	539.8	200	63.5	463.6	431.8	120.6	319.1	51.6	212.7	(4)-1 1/8	90.5	70.2
SDAF 232	177.8	153.99	22232 CC/W33	169.9	558.8	209.6	63.5	489	441.3	127	341.3	53.2	222.2	(4)-1 1/8	115	75.4
SDAF 234	188.91	163.51	22234 CC/W33	179.4	628.6	228.6	63.5	549.3	492.1	139.7	362	54.8	244.5	(4)-1 1/4	140	79.4
SDAF 236	198.44	174.62	22236 CC/W33	190.5	679.4	238.1	69.8	600.1	530.2	149.2	385.8	60.3	254	(4)-1 1/4	165	79.8
SDAF 238	212.72	184.15	22238 CC/W33	200	701.7	254	76.2	596.9	546.1	158.8	406.4	61.9	269.9	(4)-1 1/8	185	83.7
SDAF 240	222.25	193.68	22240 CC/W33	209.6	703.2	266.7	82.6	635	584.2	171.4	428.6	63.5	282.6	(4)-1 3/8	220	88.9
SDAF 244	242.89	211.14	22244 CC/W33	241.3	812.8	285.8	88.9	708	650.9	184.2	482.6	79.4	301.6	(4)-1 1/2	290	92.1

Masta® PRECISION HOUSINGS

SDAF 300 Series Pillow block Housing Suitable for 22300 CC (Straight Bore Bearing)

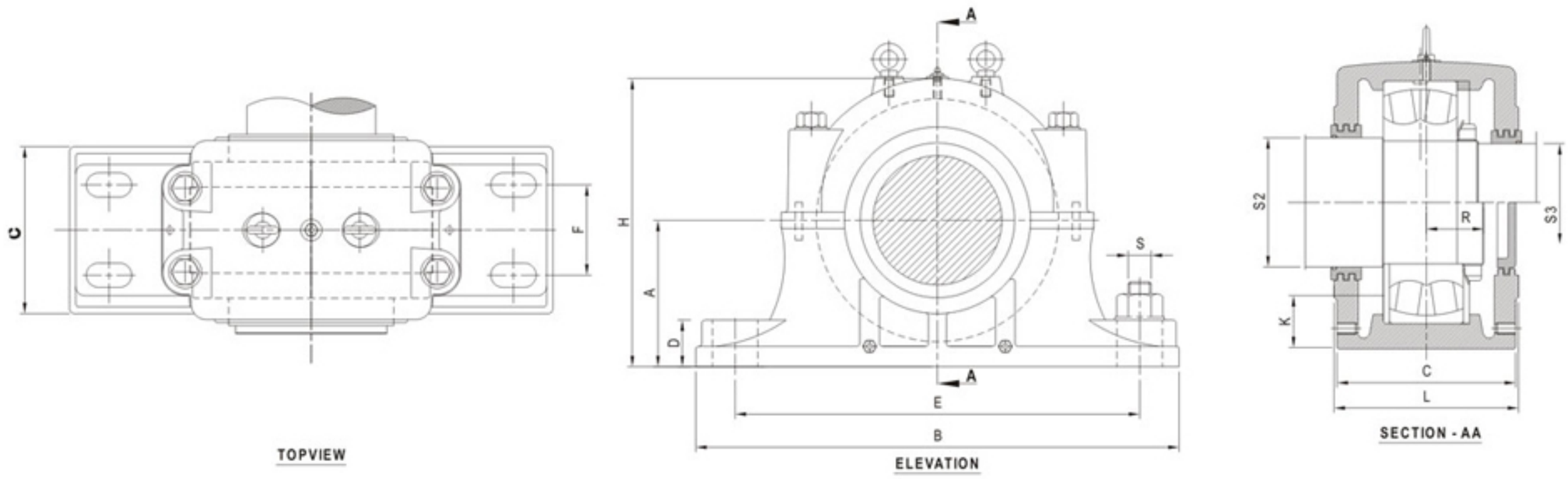

Pillow Block Housing Designation	Shaft Dia. S-2 mm	Shaft Dia. S-3 mm	Bearing Designation	A mm	B mm	C mm	D mm	E Max. mm	E Min. mm	F mm	H mm	Static Oil Leve K mm	L mm	Bolts (No. Req'd) inches	Approx Weight kg.	R mm
SDAF 316	92.08	76.2	22316 CC/W33	108	362	139.7	44.4	320.7	269.9	82.6	209.6	42.9	161.9	(4)-5/8	31	49.2
SDAF 317	100.01	80.96	22317 CC/W33	114.3	387.4	152.4	47.6	333.4	295.3	85.7	227	45.2	171.4	(4)-3/4	37.5	52.4
SDAF 318	104.78	85.72	22318 CC/W33	120.6	393.7	155.6	50.8	342.9	304.8	92.1	239.7	48.4	174.6	(4)-3/4	44.5	55.6
SDAF 320	114.3	96.84	22320 CC/W33	133.4	419.1	174.6	57.2	368.3	336.6	104.8	266.7	51.6	187.3	(4)-7/8	59	61.9
SDAF 322	123.82	106.36	22322 CC/W33	152.4	466.7	190.5	60.3	406.4	371.5	114.3	301.6	61.1	203.2	(4)-1	77	66.7
SDAF 324	134.94	115.89	22324 CC/W33	160.3	539.8	200	63.5	463.6	431.8	120.6	319.1	61.1	212.7	(4)-1 1/8	95.5	71.4
SDAF 326	149.22	125.41	22326 CC/W33	169.9	558.8	209.6	63.5	489	441.3	127	341.3	62.7	222.2	(4)-1 1/8	120	76.2
SDAF 328	158.75	134.94	22328 CC/W33	179.4	628.8	228.6	63.5	549.3	492.1	139.7	362	65.1	238.1	(4)-1 1/4	145	82.6
SDAF 330	168.28	146.05	22330 CC/W33	190.5	679.4	238.1	69.8	600.1	530.2	149.2	385.8	66.7	247.6	(4)-1 1/4	175	87.3
SDAF 332	177.8	153.99	22332 CC/W33	200	701.7	254	76.2	596.9	546.1	158.8	406.4	69.1	269.9	(4)-1 3/8	200	92.1
SDAF 334	188.91	163.51	22334 CC/W33	209.6	730.2	266.7	82.6	635	584.2	171.4	428.6	69.8	282.6	(4)-1 3/8	230	95.2
SDAF 336	198.44	174.62	22336 CC/W33	225.4	774.7	273	82.6	669.9	612.8	174.6	455.6	77.8	288.9	(4)-1 1/2	275	98.4
SDAF 338	212.72	184.15	22338 CC/W33	241.3	812.8	285.8	88.9	708	650.9	184.2	482.6	86.5	301.6	(4)-1 1/2	315	103.2
SDAF 340	222.25	193.68	22340 CC/W33	250.8	850.9	298.4	88.9	743	676.3	193.7	501.6	88.1	314.3	(4)-1 5/8	350	108

SDAF 500 Series Pillow block Housing Suitable for 22200 CCK Bearings with Adapter Sleeves

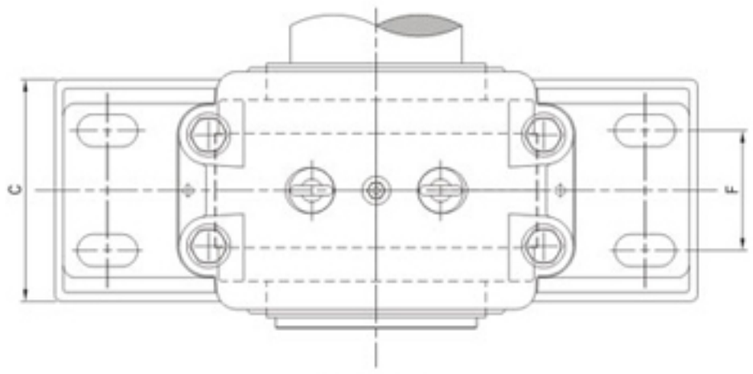

TOPVIEW

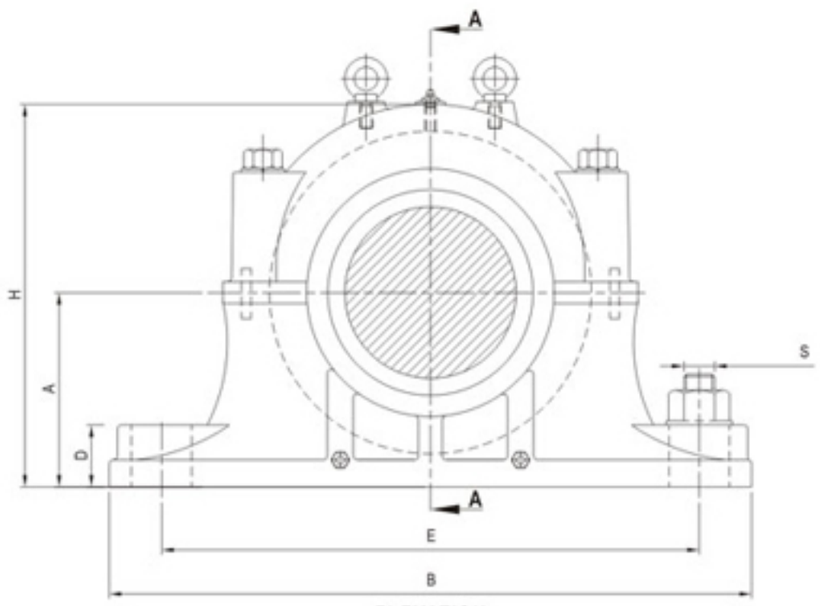

ELEVATION

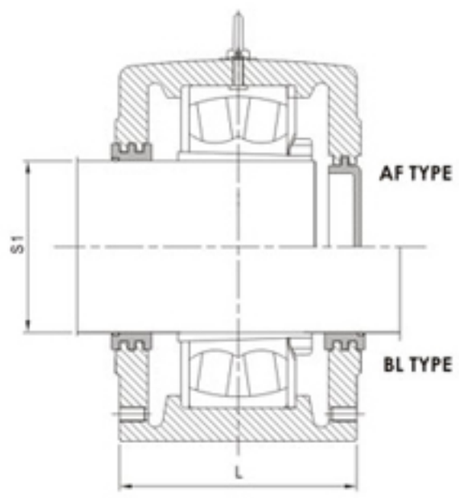

SECTION - AA

Pillow Block Housing Designation	Shaft Dia. S-1 mm	Bearing Designation	A mm	B mm	C mm	D mm	E Max. mm	E Min. mm	F mm	H mm	Static Oil Leve K mm	L mm	Bolts (No. Req'd) inches	Approx Weight kg.	R mm
SDAF 520	87.31	22220 CCK/W33	114.3	387.4	152.4	47.6	333.4	295.3	85.7	227	42.1	171.4	(4)-3/4	36.5	48.8
SDAF 522	100.01	22222 CCK/W33	125.4	419.1	171.4	54	368.3	320.7	101.6	250.8	46	184.2	(4)-7/8	47.5	54
SDAF 524	106.36	22224 CCK/W33	133.4	419.1	174.6	57.2	368.3	336.6	104.8	266.7	46.8	187.3	(4)-7/8	56.5	57.9
SDAF 526	112.71	22226 CCK/W33	152.4	466.7	190.5	60.3	406.4	371.5	114.3	301.6	59.5	203.2	(4)-1	75	62.7
SDAF 528	125.41	22228 CCK/W33	152.4	511.17	190.5	60.3	463.4	377.8	114.3	306.3	54	182.5	(4)-1	85	66.3
SDAF 530	131.76	22230 CCK/W33	160.3	539.8	200	63.5	463.6	431.8	120.7	319.1	51.6	212.7	(4)-1 1/8	97.5	70.2
SDAF 532	138.11	22232 CCK/W33	169.9	558.8	209.6	63.5	489	441.3	127	341.3	53.2	222.2	(4)-1 1/8	120	75.4
SDAF 534	150.81	22234 CCK/W33	179.4	628.6	228.6	63.5	549.3	492.1	139.7	362	54.8	244.5	(4)-1 1/4	150	79.4
SDAF 536	163.51	22236 CCK/W33	190.5	679.4	238.1	69.8	600.1	530.2	149.2	385.8	60.3	254	(4)-1 1/4	170	79.8
SDAF 538	176.21	22238 CCK/W33	200	701.7	254	76.2	596.9	546.1	158.8	406.4	61.9	269.9	(4)-1 3/8	195	83.7
SDAF 540	182.56	22240 CCK/W33	209.6	730.2	266.7	82.6	635	584.2	171.4	428.6	63.5	282.6	(4)-1 3/8	230	88.9
SDAF 544	201.61	22244 CCK/W33	241.3	812.8	285.8	88.9	708	650.9	184.2	482.6	79.4	301.6	(4)-1 1/2	310	92.1

Masta® PRECISION HOUSINGS

SDAF 600 Series Pillow block Housing Suitable for 22300 CCK Bearings with Adapter Sleeves

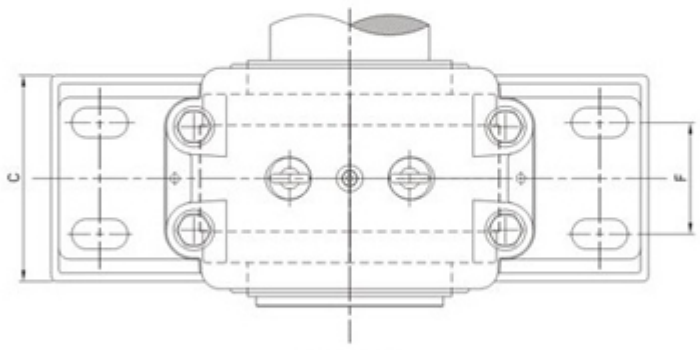

TOPVIEW

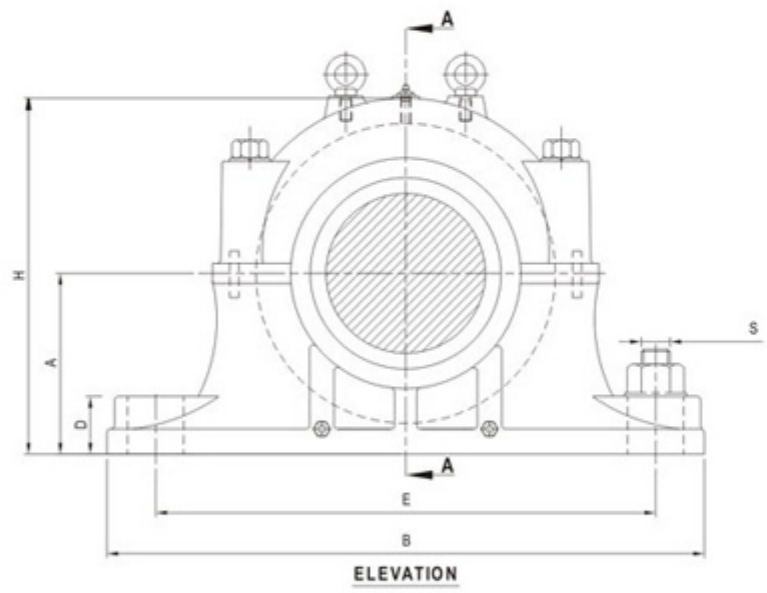

ELEVATION

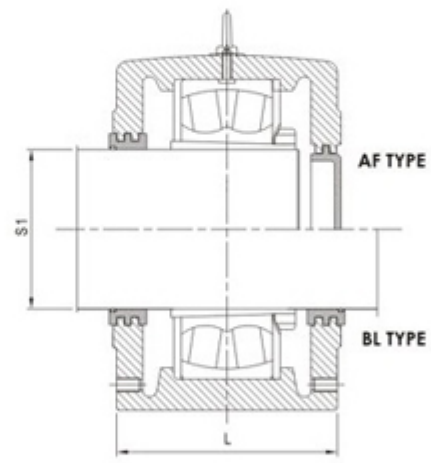

SECTION - AA

Pillow Block Housing Designation	Shaft Dia. S-1 mm	Bearing Designation	A mm	B mm	C mm	D mm	E Max. mm	E Min. mm	F mm	H mm	Static Oil Leve K mm	L mm	Bolts (No. Req'd) inches	Approx Weight kg.	R mm
SDAF 616	68.26	22316 CCK/W33	108	362	139.7	44.4	320.7	269.9	82.6	209.6	42.9	161.9	(4)-5/8	32	49.2
SDAF 617	74.61	22317 CCK/W33	114.3	387.4	152.4	47.6	333.4	295.3	85.7	227	45.2	171.4	(4)-3/4	38	52.4
SDAF 618	80.96	22318 CCK/W33	120.6	393.7	155.6	50.8	342.9	304.8	92.1	239.7	48.4	174.6	(4)-3/4	45.5	55.6
SDAF 620	87.31	22320 CCK/W33	133.4	419.1	174.6	57.2	368.3	336.6	104.8	266.7	51.6	187.3	(4)-7/8	59	61.9
SDAF 622	100.01	22322 CCK/W33	152.4	466.7	190.5	60.3	406.4	371.5	114.3	301.6	61.1	203.2	(4)-1	81.5	66.7
SDAF 624	106.36	22324 CCK/W33	160.3	539.8	200	63.5	463.6	431.8	120.6	319.1	61.1	212.7	(4)-1 1/8	97.5	71.4
SDAF 626	112.71	22326 CCK/W33	169.9	558.8	209.6	63.5	489	441.3	127	341.3	62.7	222.2	(4)-1 1/8	120	76.2
SDAF 628	125.41	22328 CCK/W33	179.4	628.6	228.6	63.5	549.3	492.1	139.7	362	65.1	238.1	(4)-1 1/4	150	82.6
SDAF 630	131.76	22330 CCK/W33	190.5	679.4	238.1	69.8	600.1	530.2	149.2	385.8	66.7	247.6	(4)-1 1/4	185	87.3
SDAF 632	138.11	22332 CCK/W33	200	701.7	254	76.2	596.9	546.1	158.8	406.4	69.1	269.9	(4)-1 3/8	205	92.1
SDAF 634	150.81	22334 CCK/W33	209.6	730.2	266.7	82.6	635	584.2	171.4	428.6	69.8	282.6	(4)-1 3/8	240	95.2
SDAF 636	163.51	22336 CCK/W33	225.4	774.7	273	82.6	669.9	612.8	174.6	455.6	77.8	288.9	(4)-1 1/2	285	100
SDAF 638	176.21	22338 CCK/W33	241.3	812.8	285.8	88.9	708	650.9	184.2	482.6	86.5	301.6	(4)-1 1/2	320	103.2
SDAF 640	182.56	22340 CCK/W33	250.8	850.9	298.4	88.9	743	676.3	193.7	501.6	88.1	314.3	(4)-1 5/8	365	108

Illustration for SOFN Series

SOFN Bearing Housings: Oil lubricated cast iron or steel bearing housing are suitable for spherical roller bearings running at high speed and high operating temperature. SOFN 200 and 300 series bearing housings are suitable for spherical roller bearings with cylindrical (straight) bore. SOFN 500 and 600 series bearing housing are suitable for spherical roller bearings with tapered bore and adapter sleeve mounting.

SOFN Bearing Housings are comprising of main body consisting of top and bottom housings. with labyrinth covers and collars, oil splash ring for splash lubricating system or oil inlet and outlet pipe fittings on either side of the housings in the labyrinth covers for oil circulatory system.

Oil level indicator supplied with the housings can be fitted into one of the four holes provided on the side covers. Oil level indicators are marked minimum and maximum oil level according to the quantity of oil required.

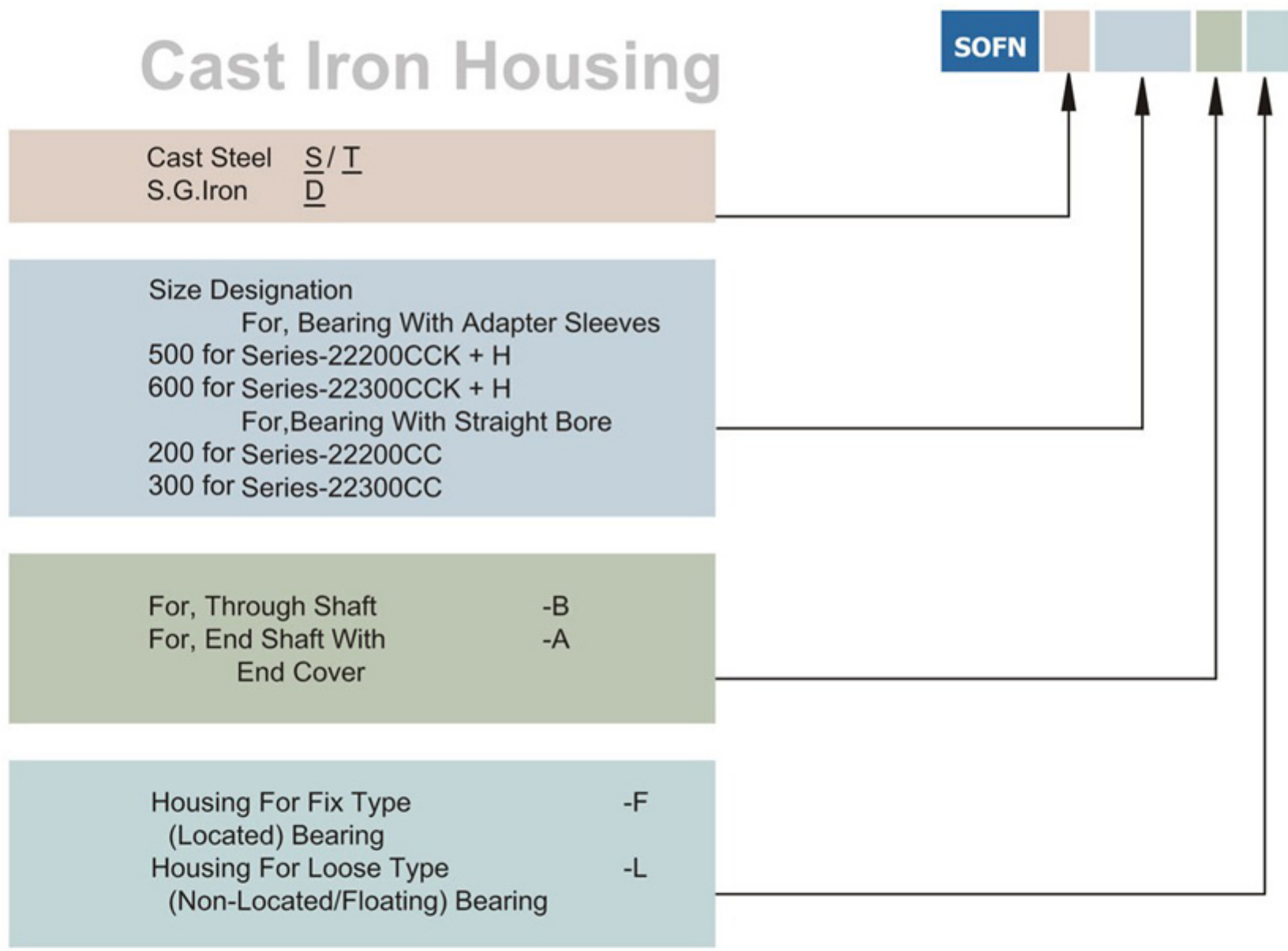

SOFN 220 BL

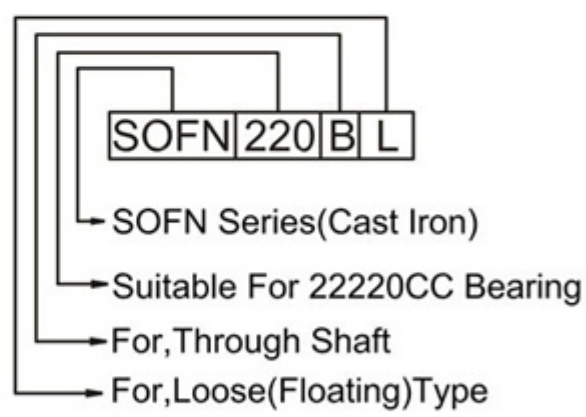

SOFNS 522 AF

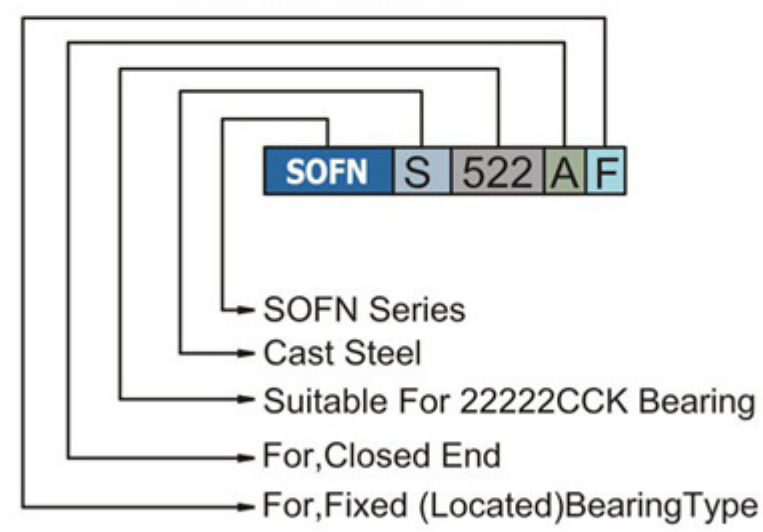

Masta®
PRECISION HOUSINGS

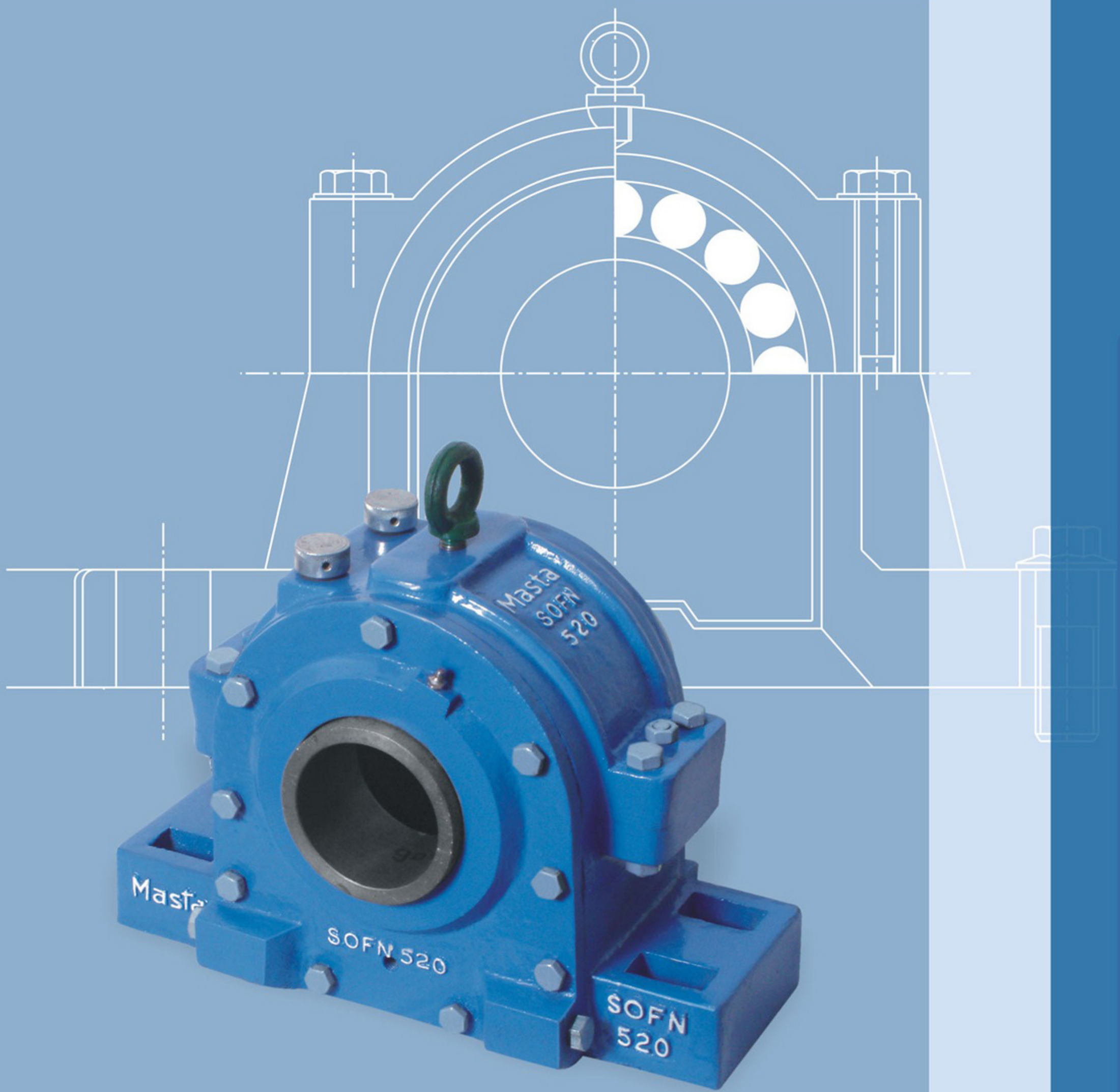

SOFN Series

SOFN Series for Spherical Roller Beraing with Cylindrical Bore (For Direct Mounting)

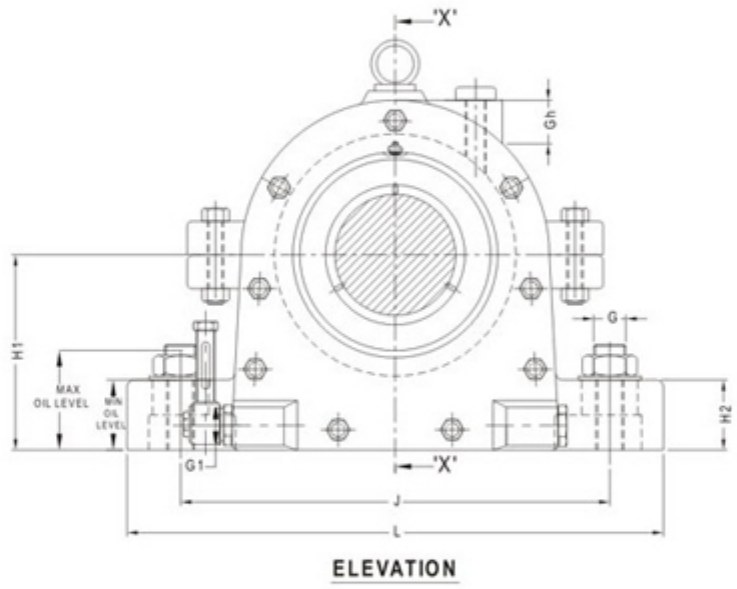

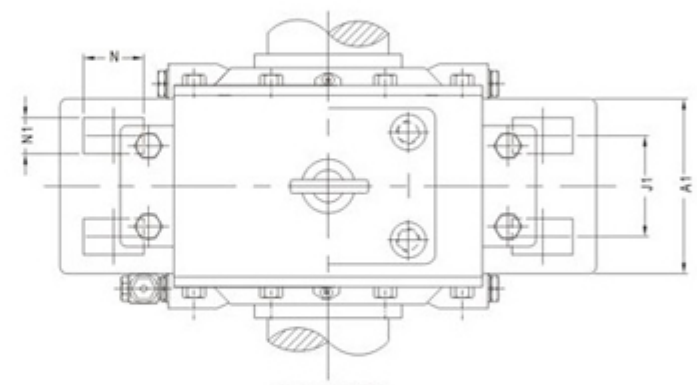

Bearing Housing Designation	Shaft Diameter		dc min	AA	AB	A1	A2	A3	G	Gh	H	H1	H2
	da	db											
SOFN 310	50	49	56	142.5	150	92	145	7.5	M16	27	168	95	30
SOFN 311	55	53	61	147.5	155	95	148	7.5	M16	27	180	100	30
SOFN 212	60	58	66	142.5	150	92	145	7.5	M16	27	168	95	30
SOFN 312	60	58	66	162.5	170	100	152	7.5	M16	27	198	110	30
SOFN 213	65	63	71	147.5	155	95	148	7.5	M16	27	180	100	30
SOFN 313	65	63	71	172.5	180	110	182	7.5	M20	27	230	125	35
SOFN 214	70	68	76	162.5	170	100	152	7.5	M16	27	198	110	30
SOFN 314	70	68	76	172.5	180	110	182	7.5	M20	27	230	125	35
SOFN 215	75	73	81	172.5	170	100	152	7.5	M16	27	198	110	30
SOFN 315	75	73	81	180	190	120	190	10	M20	27	245	135	45
SOFN 216	80	78	86	172.5	180	110	182	7.5	M20	27	230	125	35
SOFN 316	80	78	86	199	214	135	210	15	M20	27	255	140	40
SOFN 217	85	83	91	172.5	180	110	182	7.5	M20	27	230	125	35
SOFN 317	85	83	91	206	206	130	205	10	M24	27	270	145	50
SOFN 218	90	88	96	180	190	120	190	10	M20	27	245	135	45
SOFN 318	90	88	96	225	240	165	246	15	M24	32	280	155	50
SOFN 219	95	93	101	192	200	135	210	8	M20	27	255	140	40
SOFN 319	95	93	101	240	224	145	216	13	M24	27	290	160	50
SOFN 220	100	98	106	196	206	130	205	10	M24	27	270	145	50
SOFN 320	100	98	108	255	270	170	245	15	M24	27	315	170	55

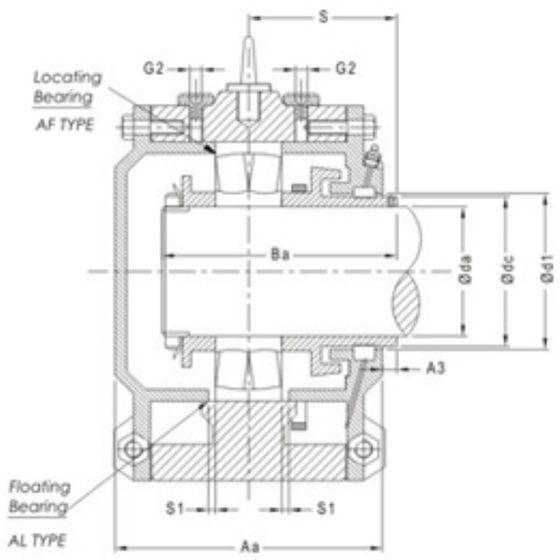

SECTION - 'XX'

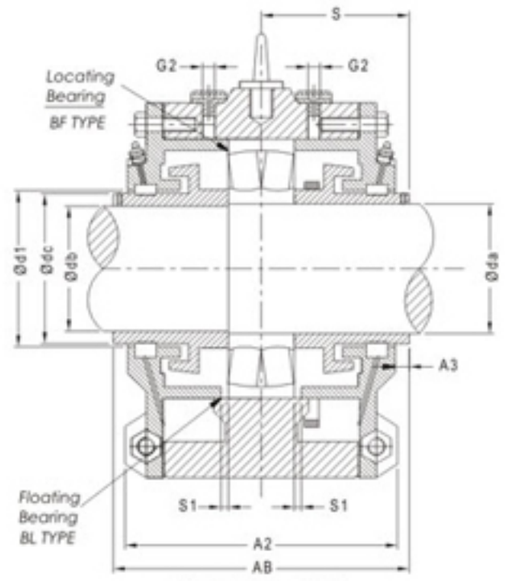

SECTION - 'XX'

AL = CLOSED END, LOOSE BEARING
BL = THROUGH SHAFT, LOOSE BEARING

AF = CLOSED END, FIXED BEARING
BF = THROUGH SHAFT, FIXED BEARING

J	J_1	L	N	N_1	S	d1	S_1	G_1	G2	Ba	Bb	Suitable for Bearing
210	50	270	30	19	75	58	3	R1/4	R3/8	128	92	22310 CC
233	50	290	33	19	77.5	65	3	R1/4	R3/8	134	96	22311 CC
210	50	270	30	19	75	70	3	R1/4	R3/8	128	86	22212 CC
230	55	290	34	19	85	70	5	R1/4	R3/8	147	105	22312 CC
233	50	290	34	19	77.5	75	3	R1/4	R3/8	134	90	22213 CC
260	60	330	40	24	90	75	3	R1/4	R3/8	153	110.5	22313 CC
230	55	290	34	19	85	80	5	R1/4	R3/8	136	98	22214 CC
260	60	330	40	24	90	80	5	R1/2	R3/8	156	112	22314 CC
230	55	290	34	19	85	85	5	R1/4	R3/8	145	98	22215 CC
290	70	360	40	24	95	85	5	R1/2	R3/8	161	119.5	22315 CC
260	60	330	40	24	90	95	5	R1/2	R3/8	149	103	22216 CC
290	80	360	40	24	107	95	5	R1/2	R3/8	181	133	22316 CC
260	60	330	40	24	90	96	5	R1/2	R3/8	150	105	22217 CC
320	75	400	45	28	103	96	5	R1/2	R1/2	188	130	22317 CC
290	70	360	40	24	95	100	5	R1/2	R3/8	161	112	22218 CC
317	95	400	45	28	120	104	5	R1/2	R1/2	198	148	22318 CC
290	80	360	40	24	100	105	5	R1/2	R3/8	171	118	22219 CC
347	75	420	45	28	114.5	105	5	R1/2	R1/2	211	145	22319 CC
320	75	400	45	28	103	110	5	R1/2	R1/2	177	123	22220 CC
347	90	420	45	28	135	115	8	R1/2	R1/2	226	168	22320 CC

SOFN Series for Spherical Roller Beraing with Cylindrical Bore (For Direct Mounting)

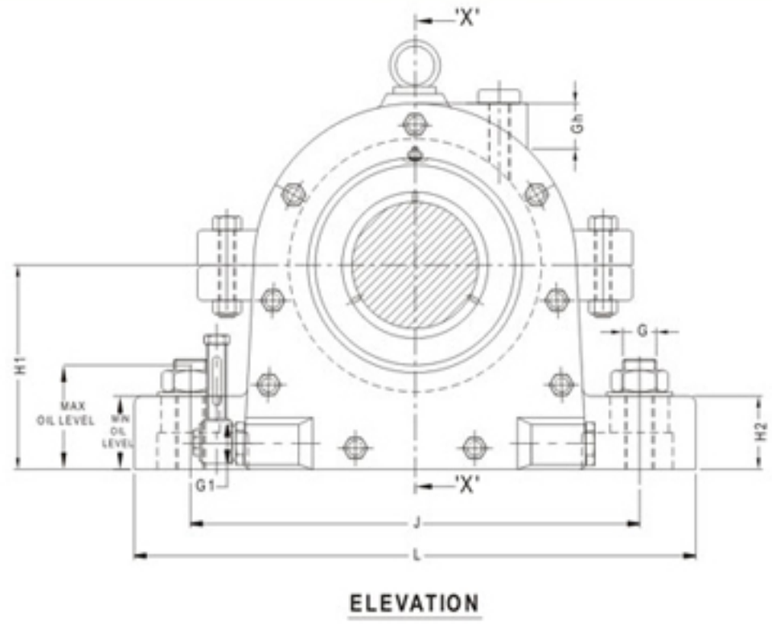

ELEVATION

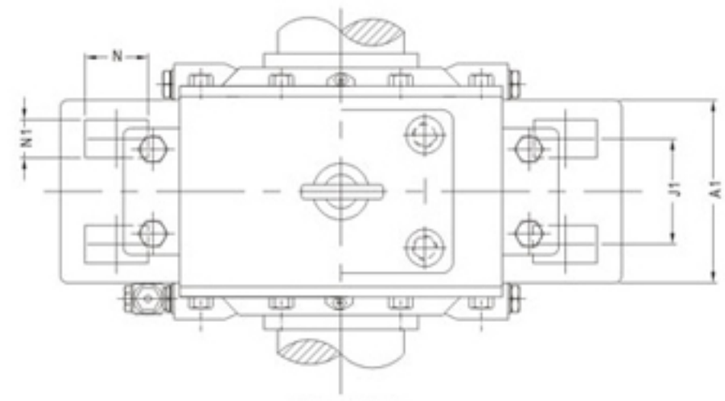

TOP VIEW

Bearing Housing Designation	Shaft Diameter		dc min	AA	AB	A1	A2	A3	G	Gh	H	H1	H2	J
	da	db												
SOFN 222	110	108	116	216	229	145	216	13	M24	27	290	160	50	347
SOFN 322	110	108	118	270	290	190	265	20	M30	33	355	190	65	415
SOFN 224	120	118	126	258	276	170	245	18	M24	27	315	170	55	347
SOFN 324	120	118	128	285.5	306	190	265	20.5	M30	44	375	200	65	450
SOFN 226	130	128	138	255	270	180	260	15	M24	32	335	180	60	377
SOFN 326	130	128	140	300	320	205	285	20	M30	38	405	215	65	470
SOFN 228	140	138	148	265	280	190	265	15	M30	33	355	190	65	415
SOFN 328	140	138	150	320	340	220	300	20	M30	42	425	230	80	510
SOFN 230	150	148	158	265	280	190	265	15	M30	44	375	200	65	450
SOFN 330	150	148	168	335	350	240	320	15	M30	44	455	245	75	545
SOFN 232	160	158	168	298	316	205	280	18	M30	38	405	215	65	470
SOFN 332	160	158	178	350	370	250	335	20	M36	50	480	260	85	590
SOFN 234	170	168	180	330	350	230	310	20	M30	46	440	235	70	515
SOFN 334	170	168	188	358	378	260	350	20	M36	44	510	275	85	600
SOFN 236	180	177	196	340	360	240	320	20	M30	44	455	245	75	545
SOFN 336	180	178	198	384.5	404	280	370	19.5	M36	48	565	305	95	670
SOFN 238	190	188	208	350	370	250	335	20	M36	50	480	260	85	590
SOFN 240	200	198	218	358	378	260	350	20	M36	44	510	275	85	600
SOFN 244	220	218	238	384.5	404	280	370	19.5	M36	48	565	305	95	670
SOFN248	240	238	258	400	420	290	380	20	M36	56	625	340	100	740

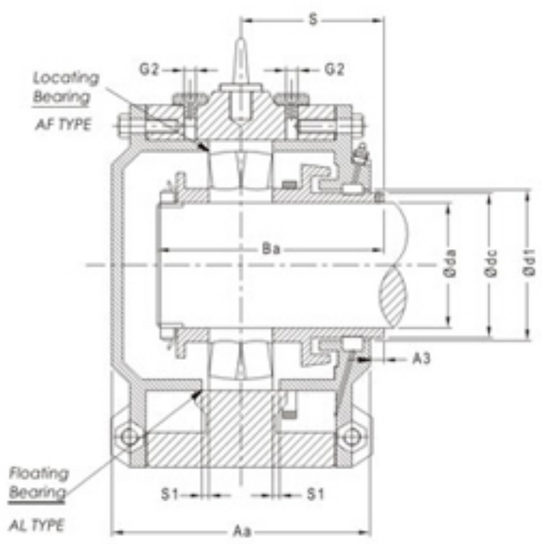

SECTION - 'XX'

AL = CLOSED END, LOOSE BEARING
BL = THROUGH SHAFT, LOOSE BEARING

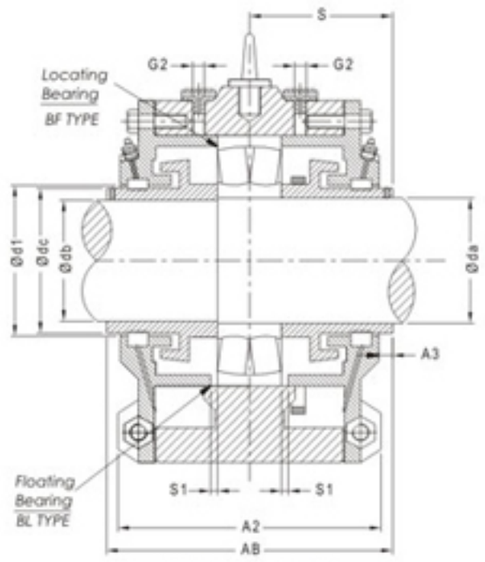

SECTION - 'XX'

AF = CLOSED END, FIXED BEARING
BF = THROUGH SHAFT, FIXED BEARING

J_1	L	N	N_1	S	d1	S_1	G_1	G2	Ba	Bb	Suitable for Bearing	Oil Level Max.	Oil Level Min.
75	420	45	28	114.5	120	5	R1/2	R1/2	192	138	22222 CC	77	50
100	500	45	35	145	130	8	R1/2	R3/4	243	180	22322 CC	95	67
90	420	45	28	138	135	8	R1/2	R1/2	225	164	22224 CC	80	60
115	540	50	35	153	140	8	R1/2	R3/4	254	192	22324 CC	100	65
100	450	45	28	135	145	8	R1/2	R1/2	226	164	22226 CC	85	60
120	560	50	35	160	150	8	R1/2	R3/4	265	202	22326 CC	105	70
100	500	45	35	140	160	8	R1/2	R3/4	234	170	22228 CC	85	60
120	630	60	35	170	165	8	R1/2	R3/4	287	215	22328 CC	115	70
115	540	50	35	140	170	8	R1/2	R3/4	239	173	22230 CC	90	60
150	650	65	35	175	175	10	R1/2	R3/4	292	225	22330 CC	120	75
120	560	50	35	158	178	10	R1/2	R3/4	266	193	22232 CC	95	65
150	720	70	42	185	190	10	R1/2	R3/4	315	240	22332 CC	125	80
130	610	55	35	175	195	10	R1/2	R3/4	290	213	22234 CC	105	75
160	730	70	42	189	197	12	R1/2	R3/4	321	244	22334 CC	130	85
150	650	65	35	180	205	10	R1/2	R3/4	296	218	22236 CC	115	80
180	820	80	42	202	210	12	R1/2	R3/4	342	260	22336 CC	155	90
150	720	70	42	185	220	12	R1/ 2	R3/4	317	226	22238 CC	120	85
160	730	70	42	189	227	12	R1/ 2	R3/4	315	233	22240 CC	125	85
180	820	80	42	202	255	12	R1/ 2	R3/4	342	251	22244 CC	140	95
190	900	80	42	210	270	12	R1/ 2	R3/4	360	266	22248 CC	155	110

Masta Brand SOFN Series for Spherical Roller Bearing with Adapter Sleeve (For Direct Mounting)

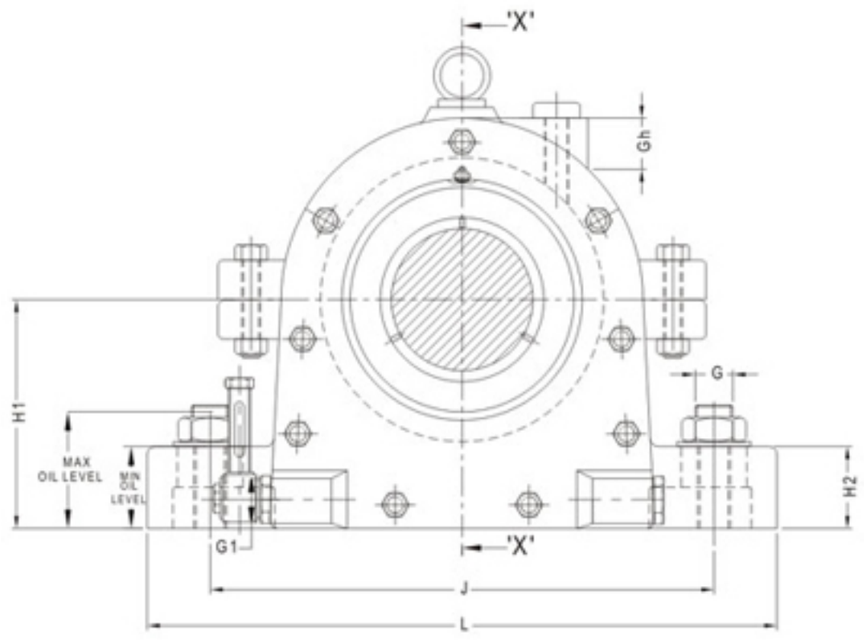

ELEVATION

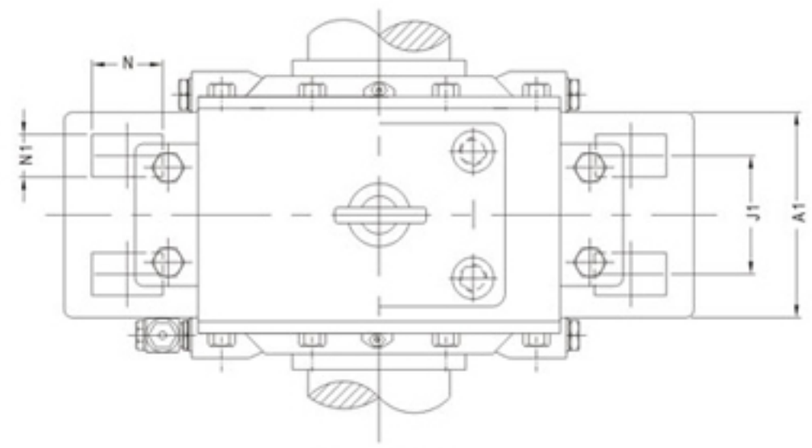

TOP VIEW

Bearing Housing Designation	Shaft Di. d	AA	AB	A1	A2	A3	G	Gh	H	H1	H2
SOFN 610	45	142.5	150	92	145	7.5	M16	27	168	95	30
SOFN 611	50	147.5	155	95	148	7.5	M16	27	180	100	30
SOFN 512	55	162.5	150	92	145	7.5	M16	27	168	95	30
SOFN 612			170	100	152	7.5	M16	27	198	110	30
SOFN 513	60	199	155	95	148	7.5	M16	27	180	100	30
SOFN 613			180	110	182	7.5	M20	27	230	125	35
SOFN 515	65	172.5	170	100	152	7.5	M16	27	198	110	35
SOFN 615			190	120	190	10	M20	27	245	135	45
SOFN 516	70	180	180	110	182	7.5	M20	27	230	125	35
SOFN 616			214	135	210	15	M20	27	255	140	40
SOFN 517	75	225	180	110	182	7.5	M20	27	230	125	35
SOFN 617			206	130	205	10	M24	27	270	145	50
SOFN 518	80	192	190	120	190	10	M20	27	245	135	45
SOFN 618			240	165	246	15	M24	32	280	155	50
SOFN 519	85	196	200	135	210	8	M20	27	255	140	45
SOFN 619			229	145	216	13	M24	27	290	160	50
SOFN 520	90	255	206	130	205	10	M24	27	270	145	50
SOFN 620			270	170	245	15	M24	27	315	170	55

Masta®
PRECISION HOUSINGS

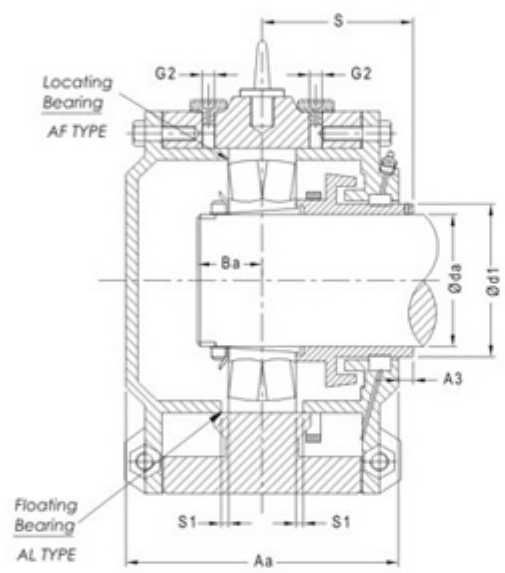

SECTION - 'XX'

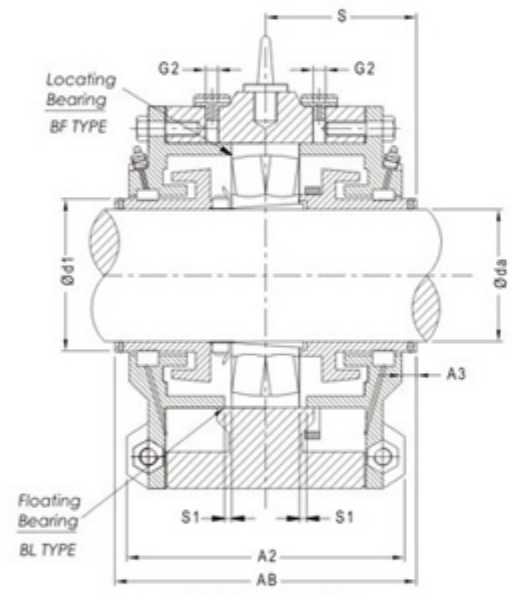

SECTION - 'XX'

AL = CLOSED END, LOOSE BEARING
BL = THROUGH SHAFT, LOOSE BEARING

AL = CLOSED END, FIXED BEARING
BL = THROUGH SHAFT, FIXED BEARING

J	J1	L	N	N1	S	d1	S1	G1	G2	Bearing Adapter sleeve	
210	50	270	30	19	75	58	3	R1/4	R3/8	22310CCK	H2310
233	50	290	33	19	77.5	65	3	R1/4	R3/8	22311CCK	H2311
210	50	270	30	19	75	70	3	R1/4	R3/8	22212CCK	H312
230	55	290	34	19	85	70	5	R1/4	R3/8	22312CCK	H2312
233	50	290	34	19	77.5	75	5	R1/4	R3/8	22213CCK	H313
260	60	330	40	24	90	75	3	R1/2	R3/8	22313CCK	H2313
230	55	290	34	19	85	85	5	R1/2	R3/8	22215CCK	H 315
290	70	360	40	24	95	85	5	R1/2	R3/8	22315CCK	H2315
260	60	330	40	24	90	95	5	R1/2	R3/8	22216CCK	H316
290	80	360	40	24	107	95	5	R1/2	R3/8	22316CCK	H2316
260	60	330	40	24	90	96	5	R1/2	R3/8	22217CCK	H317
320	75	400	45	28	103	96	5	R1/2	R1/2	22317CCK	H2317
290	70	360	40	24	95	100	5	R1/2	R3/8	22218CCK	H318
317	95	400	45	28	120	104	5	R1/2	R1/2	22318CCK	H2318
290	80	360	40	24	100	105	5	R1/2	R3/8	22219CCK	H 319
347	75	420	45	28	114.5	105	5	R1/2	R1/2	22319CCK	H2319
320	75	400	45	28	103	110	5	R1/2	R1/2	22220CCK	H320
347	90	420	45	28	135	115	8	R1/2	R1/2	22320CCK	H2320

Masta Brand SOFN Series for Spherical Roller Bearing with Adapter Sleeve (For Direct Mounting)

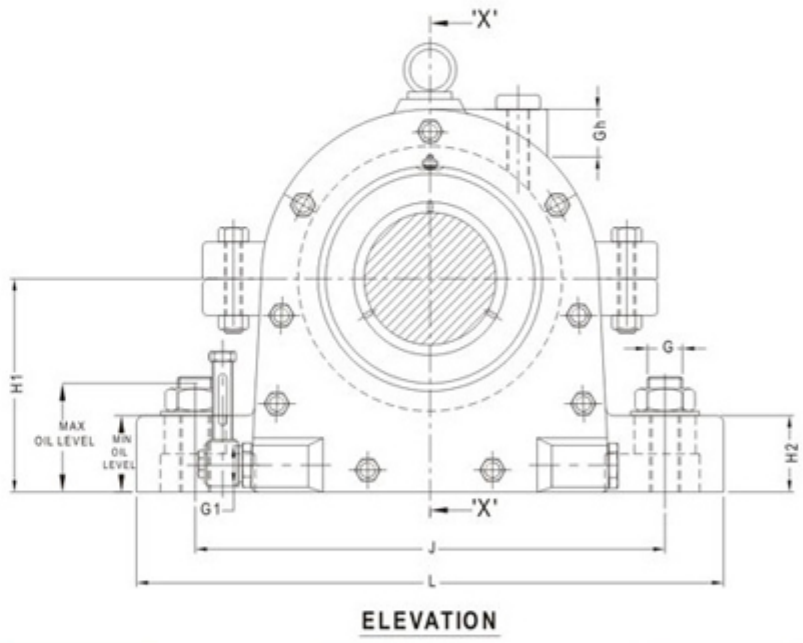

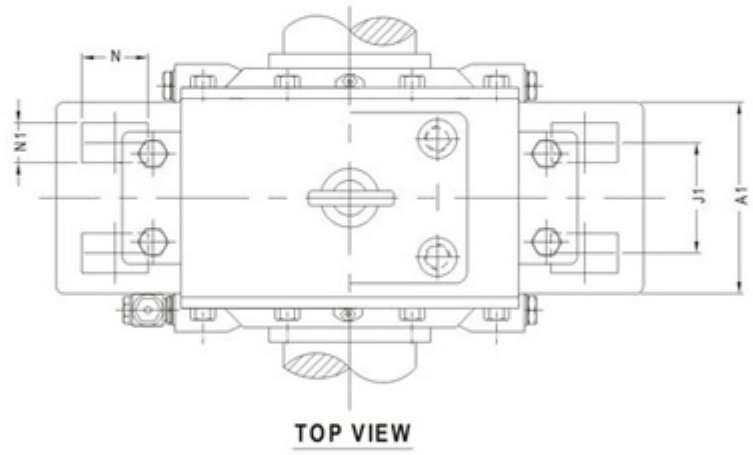

Bearing Housing Designation	Shaft Di. d	AA	AB	A1	A2	A3	G	GH	H	H1	H2
SOFN 522	100	216	229	145	216	13	M24	27	290	160	50
SOFN 622		270	290	190	265	20	M30	33	355	190	65
SOFN 524	110	258	276	170	245	18	M24	27	315	170	55
SOFN 624		285	306	190	265	20.5	M30	44	375	200	65
SOFN 526	115	255	270	180	260	15	M24	32	335	180	60
SOFN 626		300	320	205	285	20	M30	38	405	215	65
SOFN 528	125	265	280	190	265	15	M30	33	355	190	65
SOFN 628		320	340	220	300	20	M30	42	425	230	80
SOFN 530	135	265	280	190	265	15	M30	44	375	200	65
SOFN 630		335	350	240	320	15	M30	44	455	245	75
SOFN 532	140	298	316	205	280	18	M30	38	405	215	65
SOFN 632		350	370	250	335	20	M36	50	480	260	85
SOFN 534	150	330	350	230	310	20	M30	46	440	235	70
SOFN 634		358	378	260	350	20	M36	44	510	275	85
SOFN 536	160	340	360	240	320	20	M30	44	455	245	75
SOFN 636		384.5	404	280	370	19.5	M36	48	565	305	95
SOFN 538	170	350	370	250	335	20	M36	50	480	260	85
SOFN 540	180	358	378	260	350	20	M36	44	510	275	85
SOFN 544	200	384.5	404	280	370	19.5	M36	48	565	305	95
SOFN 548	220	400	420	290	380	20	M36	56	625	340	100

Masta®
PRECISION HOUSINGS

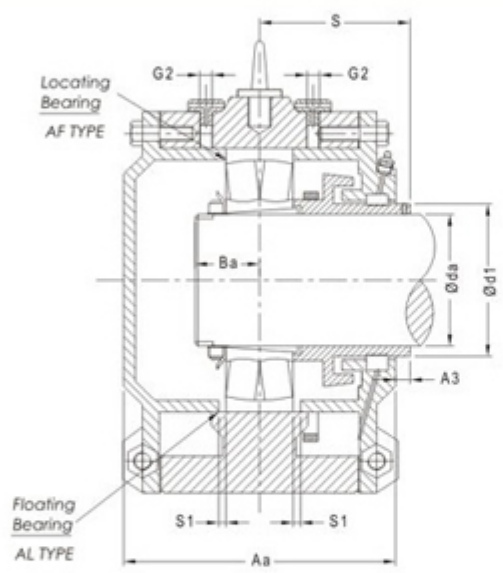

SECTION - 'XX'

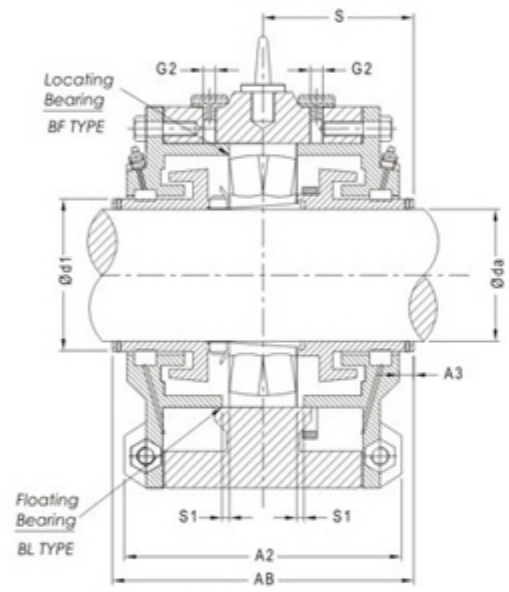

SECTION - 'XX'

Floating Type

AL = CLOSED END, LOOSE BEARING
BL = THROUGH SHAFT, LOOSE BEARING

Locating Type

AL = CLOSED END, FIXED BEARING
BL = THROUGH SHAFT, FIXED BEARING

J	J1	L	N	N1	S	d1	s1	G1	G2	Bearing Adapter sleeve	
347	75	420	45	28	114.5	120	5	R1/2	R1/2	22222CCK	H322
415	100	500	45	35	145	130	8	R1/2	R3/4	22322CCK	H2322
347	90	420	45	28	138	135	8	R1/2	R1/2	22224CCK	H3124
450	115	540	50	35	153	140	8	R1/2	R3/4	22324CCK	H2324
377	100	450	45	28	135	145	8	R1/2	R1/2	22226CCK	H3126
470	120	560	50	35	160	150	8	R1/2	R3/4	22326CCK	H2326
415	100	500	45	35	140	160	8	R1/2	R3/4	22228CCK	H3128
510	120	630	60	35	170	165	8	R1/2	R3/4	22328CCK	H2328
450	115	540	50	35	140	170	8	R1/2	R3/4	22230CCK	H3130
545	150	650	65	35	175	175	10	R1/2	R3/4	22330CCK	H2330
470	120	560	50	35	158	178	10	R1/2	R3/4	22232CCK	H3132
590	150	720	70	42	185	190	10	R1/2	R3/4	22332CCK	H2332
515	130	610	55	35	175	195	10	R1/2	R3/4	22234CCK	H3134
600	160	730	70	42	189	197	12	R1/2	R3/4	22334CCK	H2334
545	150	650	65	35	180	205	10	R1/2	R3/4	22236CCK	H3136
670	180	820	80	42	202	210	12	R1/2	R3/4	22336CCK	H2336
590	150	720	70	42	185	220	12	R1/2	R3/4	22238CCK	H3138
600	160	730	70	42	189	227	12	R1/2	R3/4	22340CCK	H2338
670	180	820	80	42	202	255	12	R1/2	R3/4	22244CCK	H3144
740	190	900	80	42	210	270	12	R1/2	R3/4	22248CCK	H3148

Illustration for MONL Series

Cast Iron Housing

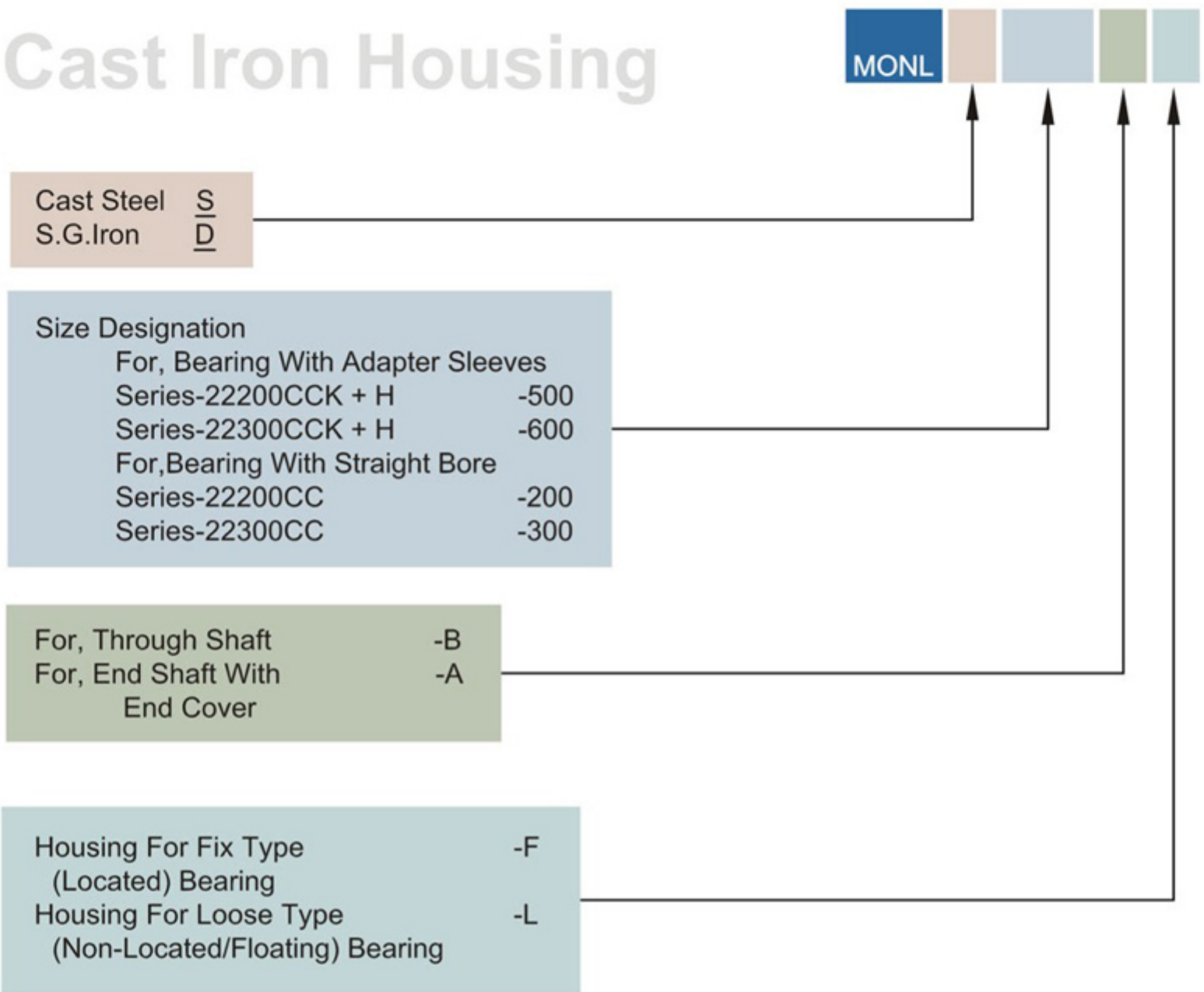

MONL 220 BL

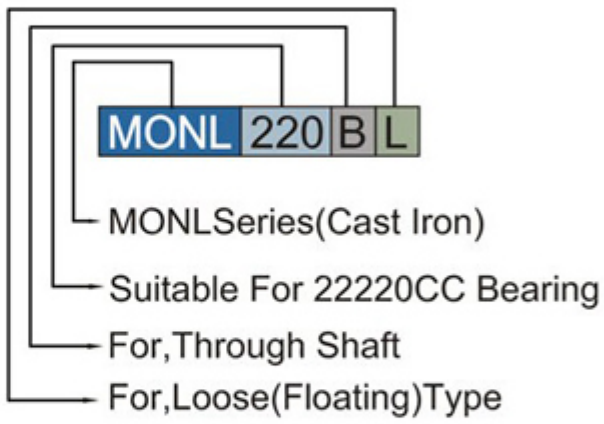

MONLS 522 AF

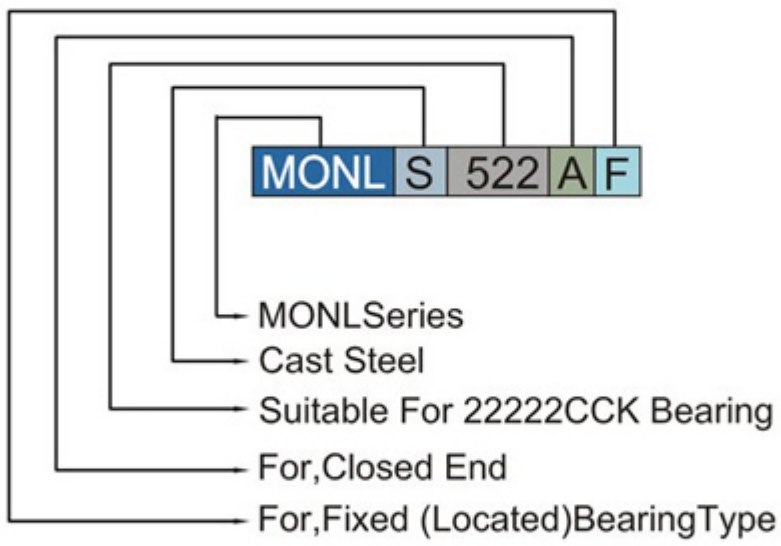

Masta®
PRECISION HOUSINGS

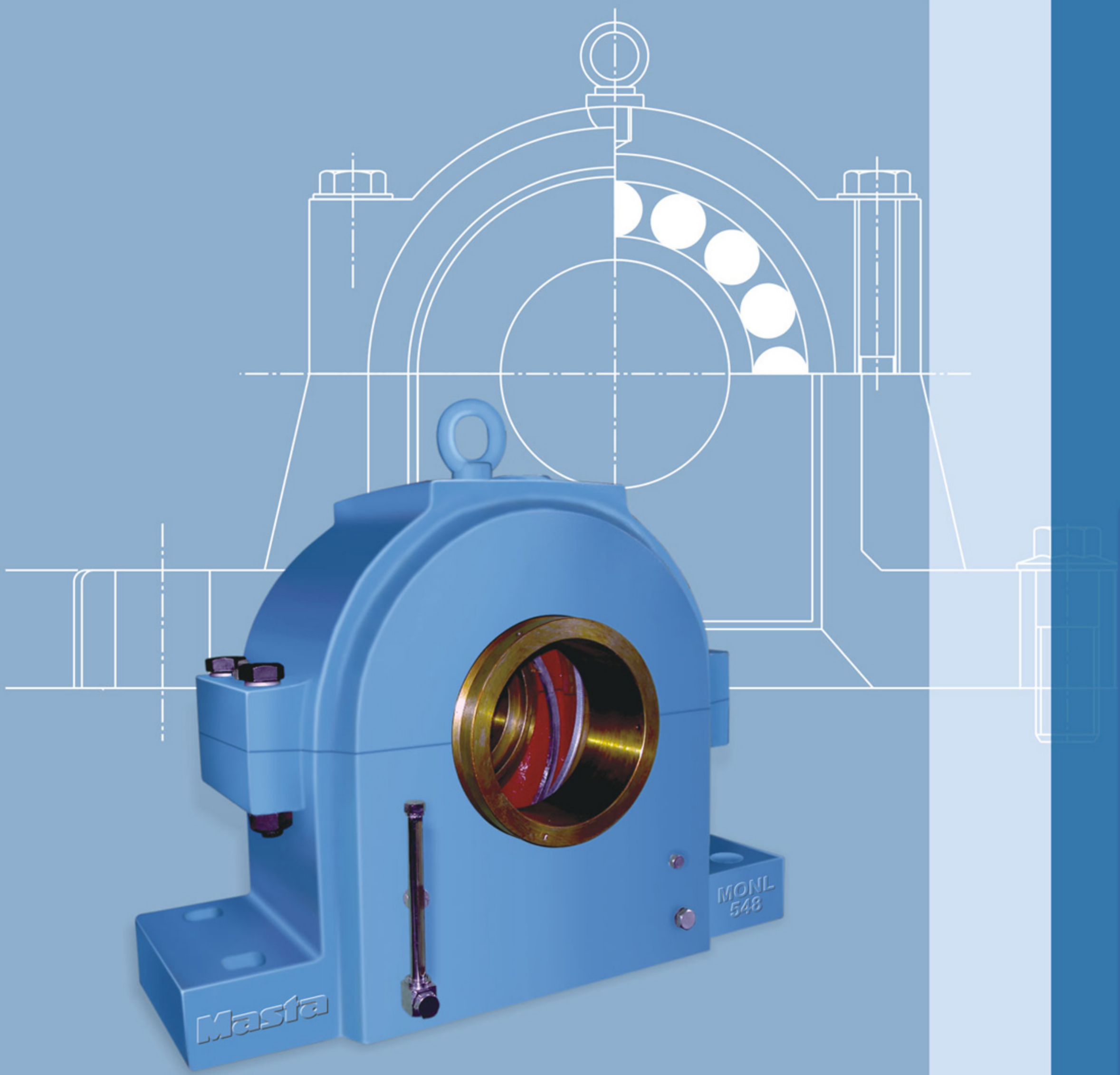

MONL Series

Equivalent to SONL Series Plummer Block

Plummer Blocks (Bearing housings)
Series MONL bearings Suitable for 22200 EK Bearing with adapter sleeves

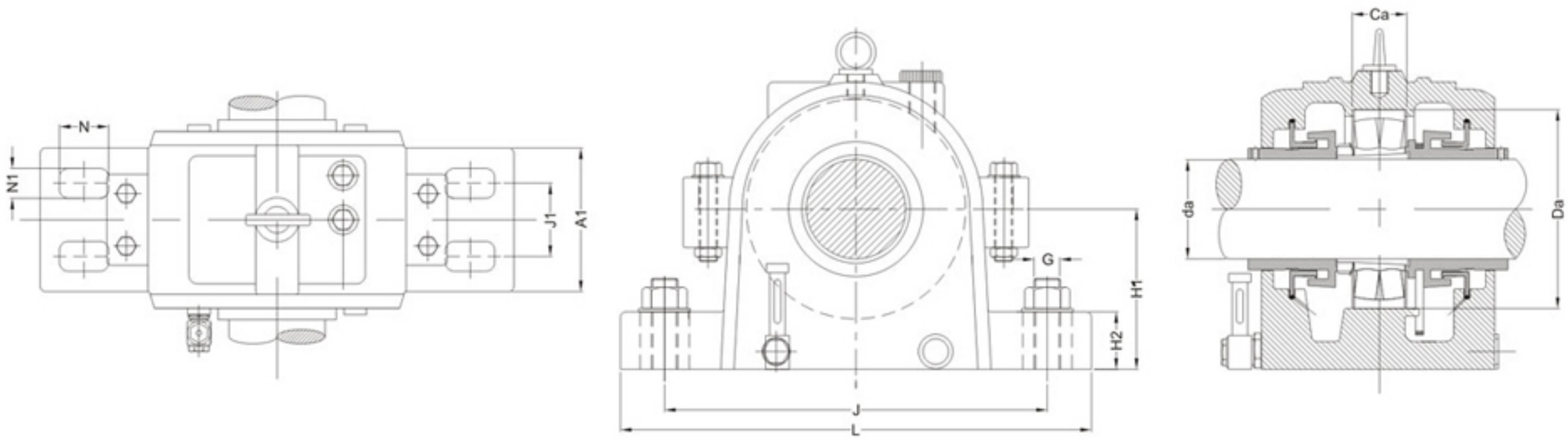

Housing Designation	Shaft	Housing Dimensions									Seal	End Cover	Bearing Seating		Appropiate Bearings and Associated Comonents		
	da mm	A1 mm	H1	H2	J	J1	L	N	N1	G	1 per housing for Closed End 2 For open type	for Closed End only	Ca mm	Da	Spherical Roller Bearing	Adapter Sleeve	Locating Ring 2 per Housing
MONL 517	75	110	125	35	260	60	330	28	22	20	MTSO 517	ECO 517	46	150	22217 EK	H 317	FRB 5/150
MONL 518	80	120	135	45	290	70	360	28	22	20	MTSO 518	ECO 518	50	160	22218 EK	H 318	FRB 5/160
MONL 520	90	130	145	50	320	75	400	32	26	24	MTSO 520	ECO 520	60	180	22220 EK	H 320	FRB 7/180
MONL 522	100	145	160	50	347	75	420	32	26	24	MTSO 522	ECO 522	71	200	22222 EK	H 322	FRB 9/200
MONL 524	110	170	170	55	347	90	420	32	26	24	MTSO 524	ECO 524	82	215	22224 EK	H 3124	FRB 12/215
MONL 526	115	180	180	60	377	100	450	35	28	24	MTSO 526	ECO 526	86	230	22226 EK	H 3126	FRB 11/230
MONL 528	125	190	190	65	415	100	500	42	35	30	MTSO 528	ECO 528	90	250	22228 EK	H 3128	FRB 11/250
MONL 530	135	190	200	65	450	115	540	42	35	30	MTSO 530	ECO 530	93	270	22230 EK	H 3130	FRB 10/270
MONL 532	140	205	215	65	470	120	560	42	35	30	MTSO 532	ECO 532	104	290	22232 EK	H 3132	FRB 12/290

Plummer Blocks (Bearing housings)
Series MONL 200 bearings Suitable for 22200 CC Bearing with Straight Bore Bearing

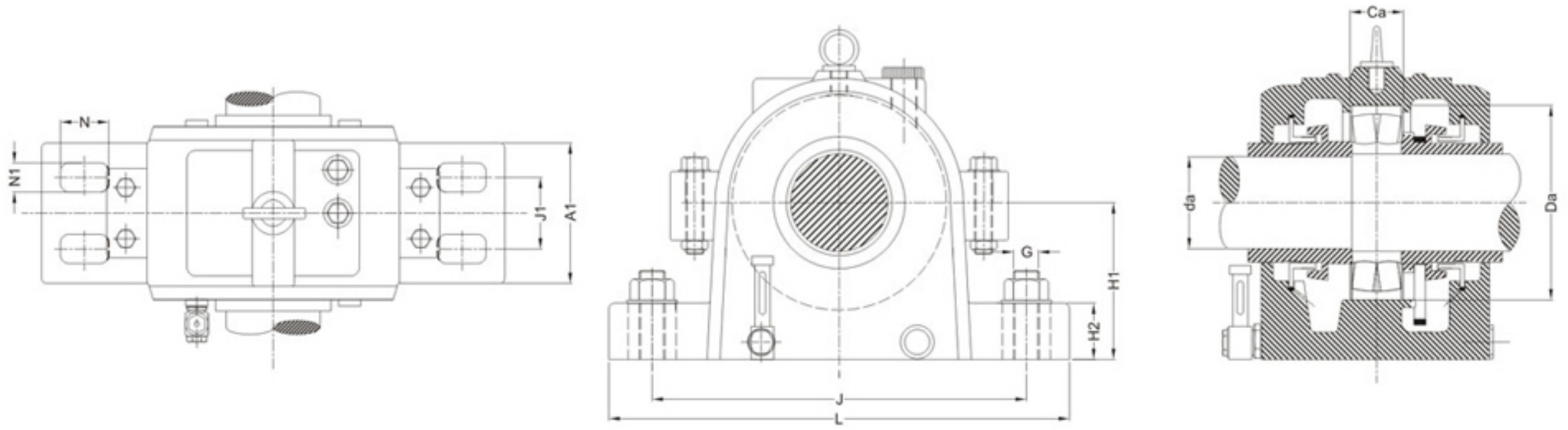

Housing Designation	Shaft da mm	Housing Dimensions A1 mm	H1	H2	J	J1	L	N	N1	G	Seal 1 per housing for Closed End 2 For open type	End Cover for Closed End only	Shaft db mm	Bearing Seating Ca mm	Da	Appropiate Bearings and Associated Comonents: Spherical Roller Bearing CARB Bearing	Locating Ring 2 per Housing
MONL 217	85	110	125	35	260	60	330	28	22	20	MTSO 217	ECO 217	83	46	150	22217 E	FRB 5/150
MONL 218	90	120	135	45	290	70	360	28	22	20	MTSO 218	ECO 218	88	50	160	22218 E	FRB 5/160
MONL 220	100	130	145	50	320	75	400	32	26	24	MTSO 220	ECO 220	98	60	180	22220 E	FRB 7/180
MONL 222	110	145	160	50	347	75	420	32	26	24	MTSO 222	ECO 222	108	71	200	22222 E	FRB 9/200
MONL 224	120	170	170	55	347	90	420	32	26	24	MTSO 224	ECO 224	118	82	215	22224 E	FRB 12/215
MONL 226	130	180	180	60	377	100	450	35	28	24	MTSO 226	ECO 226	128	86	230	22226 E	FRB 11/230
MONL 228	140	190	190	65	415	100	500	42	35	30	MTSO 228	ECO 228	138	90	250	22228 E	FRB 11/250
MONL 230	150	190	200	65	450	115	540	42	35	30	MTSO 230	ECO 230	148	93	270	22230 E	FRB 10/270
MONL 232	160	205	215	65	470	120	560	42	35	30	MTSO 232	ECO 232	158	104	290	22232 E	FRB 12/290

Illustration for LOE Series

LOE 200 & 300 Series bearing housings are suitable for spherical roller bearings with cylindrical bore of series 22200 CC & 22300 CC high speed bearing application with oil lubrication. The housings are horizontally split supplied with two labyrinth covers sealed with two labyrinth rings. The housings are equipped with breather plug, drain plug, oil pick-up ring, one oil level indicator. Water cooling coil for sump oil can be provided on order. For through shaft, both ends are open and for shaft terminating inside the housing, an end cover is provided to close the end. The housings are provided four elongated holes. LOE 500 & 600 series bearing housings are available for bearings with tapered bore and adapter sleeve mounting in 22200 CK & 22300 CCK.

Cast Iron Housing

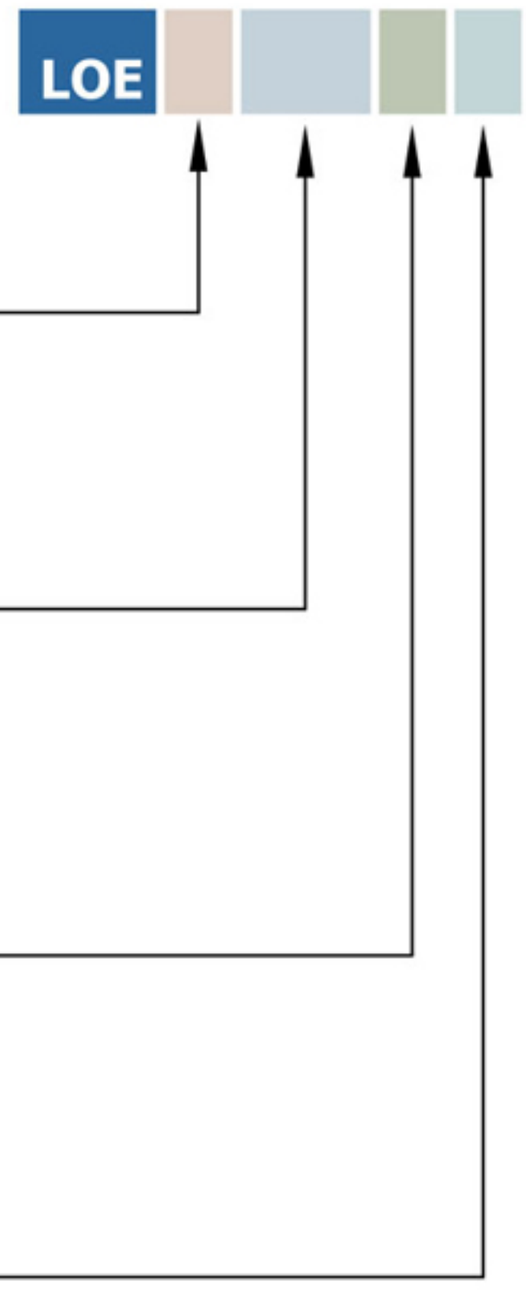

Cast Steel S
S.G.Iron D

Size Designation
For, Bearing With Adapter Sleeves
Series-22200CCK + H -500
Series-22300CCK + H -600
For,Bearing With Straight Bore
Series-22200CC -200
Series-22300CC -300

For, Through Shaft -B
For, End Shaft With End Cover -A

Housing For Fix Type (Located) Bearing -F
Housing For Loose Type (Non-Located/Floating) Bearing -L

LOE 220 BL

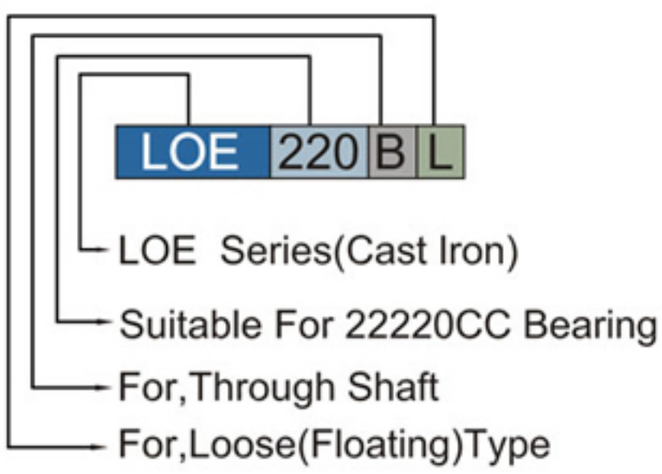

LOES 522 AF

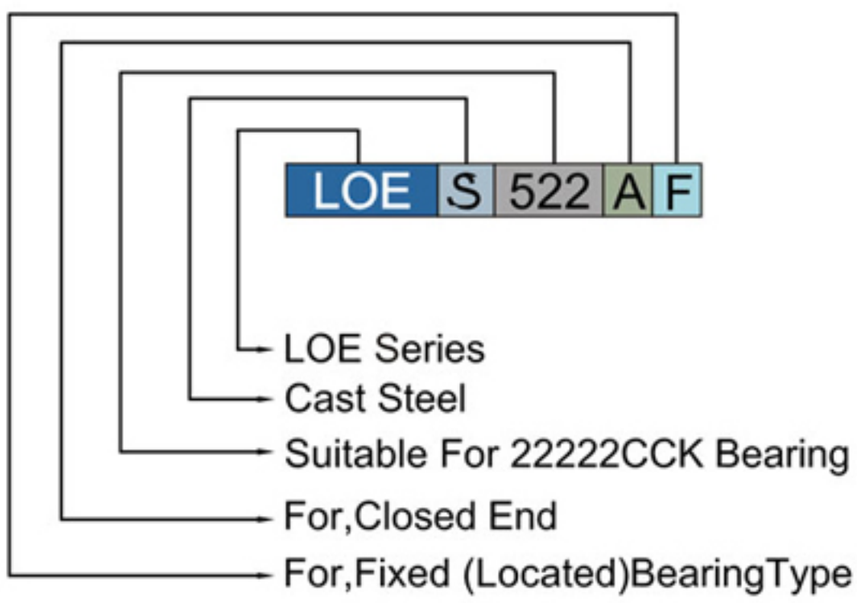

Masta®
PRECISION HOUSINGS

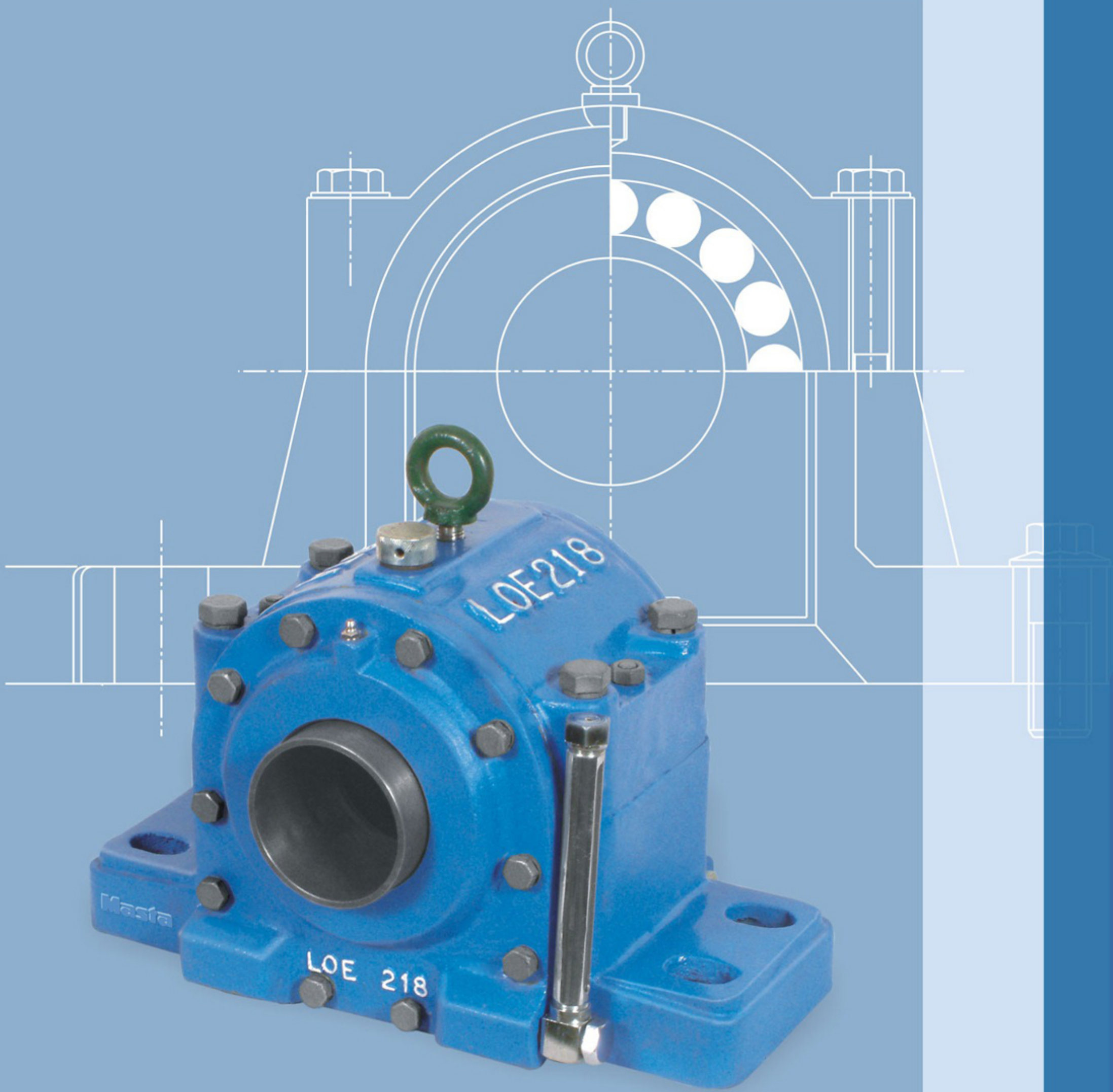

LOE Series

LOE Series

Bearing Housing (Plummer Block)
LOE-200 & 300 Suitable for 22200 & 22300 Series Spherical Bore Bearing.

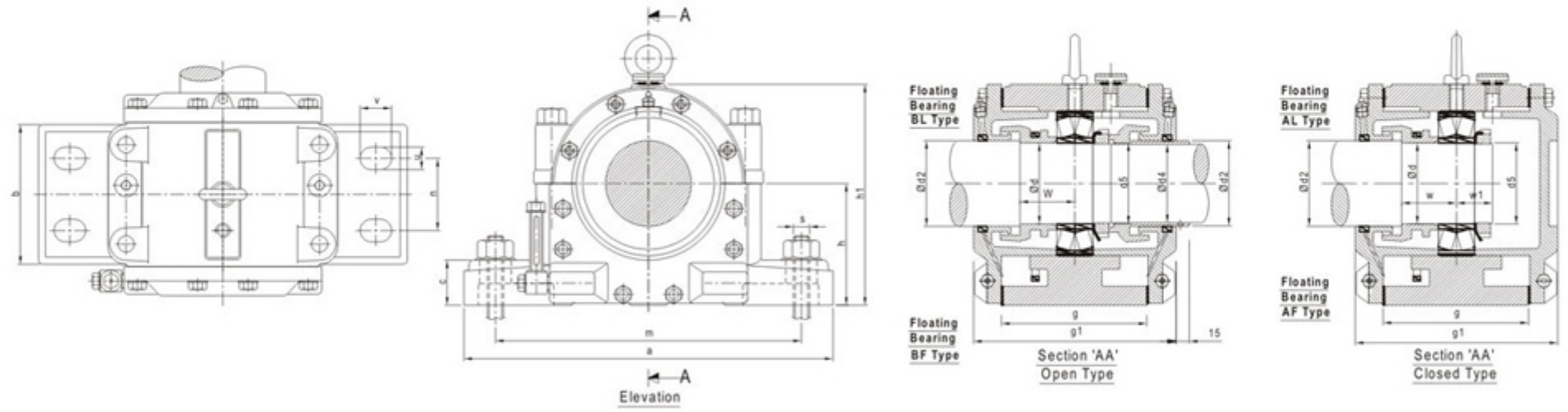

Bearing Housing Designation	Shaft Diameter				a	b	h1	h	c	w	w1	m	n	g	g1	v	u	s	Suitable for Bearing
	d	d2	d4	d5															
LOE-310	50	55	47	M50x2	350	125	205	115	40	52	33	290	75	135	210	30	20	M-16	22310 CC
LOE-312	60	65	57	M60x2	370	130	220	125	45	55	37	310	80	140	220	30	20	M-16	22312 CC
LOE-214	70	75	67	M70x2	350	110	220	125	45	52	37	290	60	120	190	30	20	M-16	22214 CC
LOE-314	70	75	67	M70x2	410	150	240	135	48	55	41	340	80	160	225	35	25	M-20	22314 CC
LOE-215	75	80	72	M75x2	350	110	220	125	45	52	37	290	60	120	190	30	20	M-16	22215 CC
LOE-216	80	85	77	M80x2	410	150	245	135	48	55	47	340	80	160	225	35	25	M-20	22216 CC
LOE-316	80	85	77	M80x2	490	160	270	150	50	67	47	400	80	170	250	45	30	M-24	22316 CC
LOE-217	85	90	82	M85x2	410	150	245	135	48	62	37	340	80	160	225	35	25	M-20	22217 CC
LOE-317	85	90	82	M85x2	490	160	270	150	50	72	52	400	80	170	250	45	30	M-24	22317 CC
LOE-218	90	95	87	M90x2	410	150	245	135	48	61	40	340	80	160	225	35	25	M-20	22218 CC
LOE-318	90	95	87	M90x2	500	165	305	175	55	72	51	400		175	250	45	30	M-24	22318 CC
LOE-219	95	100	92	M95x 2	490	160	270	150	50	67	42	400	80	170	250	45	30	M-24	22219 CC

Masta®
PRECISION HOUSINGS

Bearing Housing (Plummer Block)
LOE-200 & 300 Suitable for 22200 & 22300 Series Straight bore Bearing

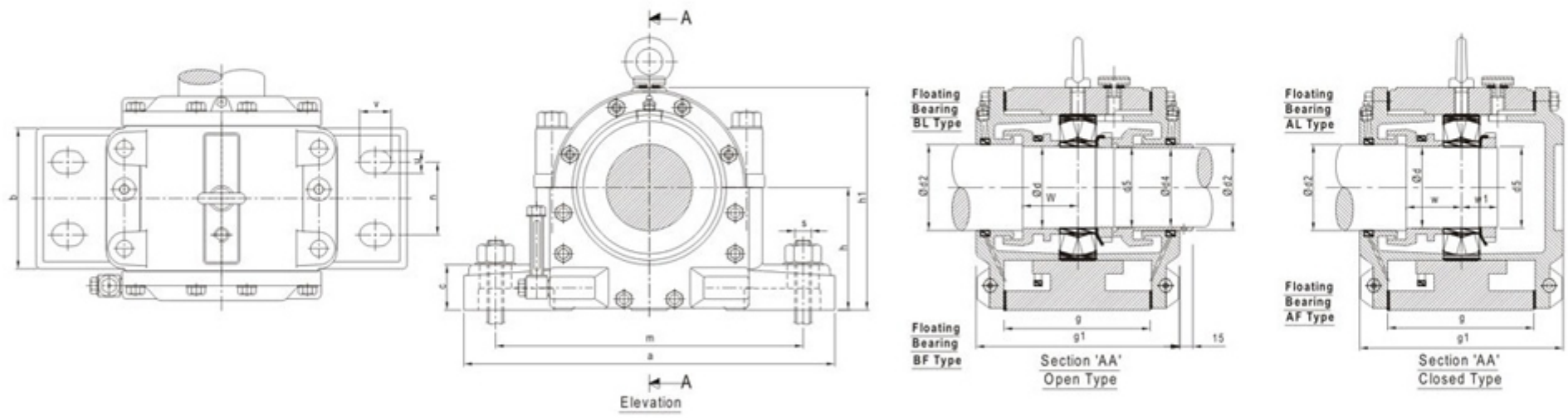

Bearing Housing Designation	Shaft Diameter				a	b	h1	h	c	w	w1	m	n	g	g1	v	u	s	Suitable for Bearing
	d	d2	d4	d5															
LOE-220	100	110	97	M100x2	490	160	270	150	50	60	45	400	80	170	250	45	30	M-24	22220 CC
LOE-320	100	106	97	M100x2	550	165	320	175	55	72	58	440	80	175	250	50	36	M-30	22320 CC
LOE-222	110	116	107	M110x2	510	165	300	165	50	70	49	420	80	175	250	45	30	M-24	22222 CC
LOE-322	110	120	107	M110x2	570	180	335	180	65	77	62	460	95	190	270	50	36	M-30	22322 CC
LOE-224	120	126	117	M120x2	550	165	320	175	55	72	52	440	80	175	250	50	36	M-30	22224 CC
LOE-324	120	126	117	M120x2	660	200	390	220	75	90	66	530	110	210	300	60	42	M-36	22324 CC
LOE-226	130	136	127	M130x2	570	175	345	190	65	77	56	460	90	185	260	50	36	M-30	22226 CC
LOE-326	130	140	127	M130x2	660	200	420	235	80	86	72	530	110	220	315	60	42	M-36	22326 CC
LOE-228	140	150	137	M140x2	570	175	355	190	65	73	58	460	100	180	260	50	36	M-30	22228 CC
LOE-328	140	146	137	M140x2	710	220	450	260	85	95	76	580	125	230	325	60	42	M-36	22328 CC
LOE-230	150	156	147	M150x2	660	190	395	220	70	82	64	530	100	200	275	60	42	M-36	22230 CC
LOE-330	150	160	147	M150x2	760	200	465	265	85	95	82	630	125	240	335	60	42	M-36	22330 CC
LOE-232	160	170	155	M160x3	660	200	400	220	70	80	70	530	110	210	290	60	42	M-36	22232 CC
LOE-332	160	166	155	M160x3	820	240	485	270	90	100	86	670	130	250	350	70	48	M-42	22332 CC
LOE-234	170	176	165	M170x3	710	200	460	260	85	90	73	580	110	210	300	60	42	M-36	22234 CC
LOE-334	160	166	155	M160x3	820	240	485	270	90	100	86	670	130	250	350	70	48	M-42	22334 CC

Bearing Housing (Plummer Block) of Series LOE-500 & 600 Suitable for Spherical Roller Bearing with Adapter Sleeve Series 22200 CCK & 22300 CCK Respectively.

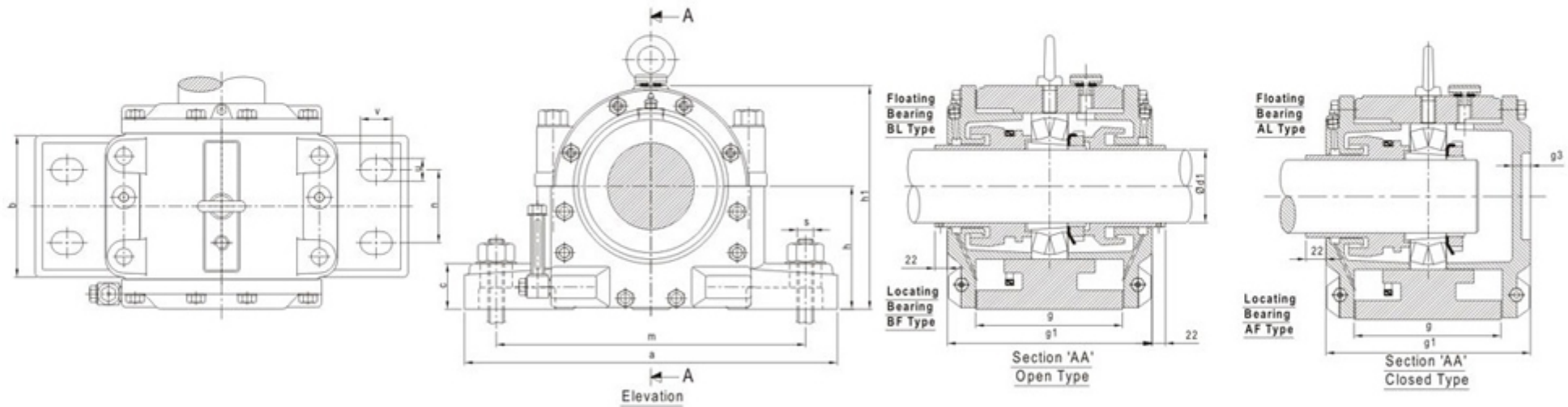

Bearing Housing Designation	Shaft Diameter D1	a	b	h1	h	c	m	n	g	g1	v	u	s	w1	Bearing Adapter Sleeve
LOE 612	50	370	130	220	125	45	310	80	140	220	30	20	M-16		22312CCK H 2312
LOE 514	60	350	110	220	125	45	290	60	120	190	30	20	M-16		22214CCK H 314
LOE 614	60	410	150	250	135	48	340	80	160	247	35	25	M-20	45	22314CCK H 2314
LOE 515	65	350	110	220	125	45	290	60	120	190	30	20	M-16		22215CCK H 315
LOE 516	70	410	150	245	135	48	340	80	160	225	35	25	M-20		22216CCK H 316
LOE 616	70	490	160	270	150	50	400	80	170	272	45	30	M-24	50	22316CCK H 2316
LOE 517	75	410	150	245	135	48	340	80	160	247	35	25	M-20	42	22217CCK H 317
LOE 617	75	490	160	270	150	50	400	80	170	272	45	30	M-24		22317CCK H 2317
LOE 518	80	410	150	245	135	48	340	80	160	247	35	25	M-20	45	22218CCK H 318
LOE 618	80	500	165	305	175	55	420	80	175	272	45	30	M-24	55	22318CCK H 2318
LOE 519	85	490	160	270	150	50	400	80	170	272	45	30	M-24	45	22219CCK H 319

Masta® PRECISION HOUSINGS

Bearing Housing (Plummer Block)
LOE-500 & 600 for Spherical Roller Bearing with Adapter Sleeve Series 22200CCK & 22300CCK Respectively.

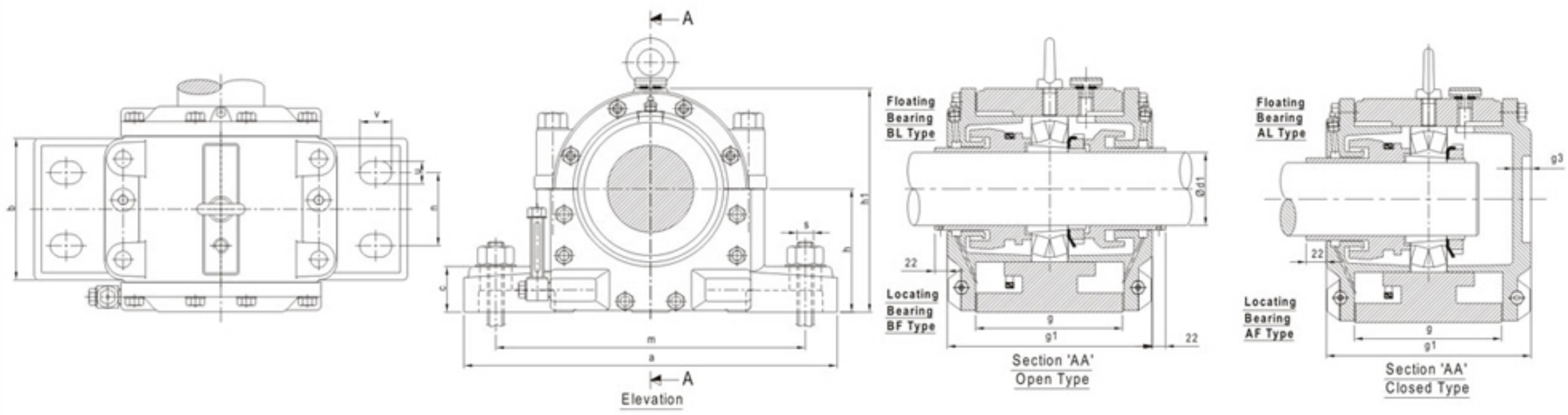

Bearing Housing Designation	Shaft Diameter D1	a	b	h1	h	c	m	n	g	g1	v	u	s	w1	Bearing Adapter Sleeve
LOE 520	90	490	160	270	150	50	400	80	170	272	45	30	M-24	50	22220 CCK H 320
LOE 620	90	550	165	320	175	55	440	80	175	272	50	36	M-30	65	22320 CCK H 2320
LOE 522	100	510	165	300	165	50	420	80	175	272	45	30	M-24	60	22222 CCK H 322
LOE 622	100	570	180	335	180	65	460	95	190	292	50	36	M-30	65	22322 CCK H 2322
LOE 524	110	550	165	320	175	55	440	80	175	272	50	36	M-30	60	22224 CCK H 3124
LOE 624	110	660	200	390	220	75	530	110	210	322	60	42	M-36	70	22324 CCK H 2324
LOE 526	115	570	175	345	190	65	460	90	185	282	50	36	M-30	65	22226 CCK H 3126
LOE 626	115	660	200	420	235	80	530	110	220	337	60	42	M-36	80	22326 CCK H 2326
LOE 528	125	570	175	355	190	65	460	100	180	282	50	36	M-30	65	22228 CCK H 3128
LOE 628	125	710	220	450	260	85	580	125	230	347	60	42	M-36	85	22328 CCK H 2328
LOE 530	135	660	190	395	220	70	530	100	200	297	60	42	M-36	70	22230 CCK H 3130
LOE 630	135	760	200	465	265	85	630	125	240	357	60	42	M-36	95	22330 CCK H 2330
LOE 532	140	660	200	400	220	70	530	110	210	312	60	42	M-36	75	22232 CCK H 3132
LOE 632	140	820	240	485	270	90	670	130	250	372	70	48	M-42	100	22332 CCK H 2332
LOE 534	150	710	200	460	260	85	580	110	210	322	60	42	M-36	80	22234 CCK H 3134
LOE 634	150	830	240	510	280	90	670	130	255	372	70	48	M-42	110	22334 CCK H 2334
LOE 536	160	710	200	465	260	85	580	110	210	322	60	42	M-36	80	22236 CCK H 3136
LOE 636	160	840	240	530	290	90	680	130	260	382	70	48	M-42	120	22336 CCK H 2336
LOE 538	170	820	240	485	270	90	670	130	250	372	70	48	M-42	80	22238 CCK H 3138
LOE 540	180	830	240	510	280	90	670	130	260	368	70	48	M-42	90	22240 CCK H 3140
LOE 544	200	880	240	565	310	105	720	130	280	402	70	48	M-42	90	22244 CCK H 3144
LOE 548	220	980	280	625	340	120	820	165	300	422	70	48	M-42	110	22248 CCK H 3148

Illustration for PDN Series

PDN Series Bearing Housings Suitable for two deep groove ball bearings or one deep groove bearing on one end and one cylindrical roller bearing on other end.

PDN 200 Series suitable for 6200 and NU 200 Series bearings.
PDN 300 Series suitable for 6300 and NU 300 Series bearings.

Illustration for PDN Series

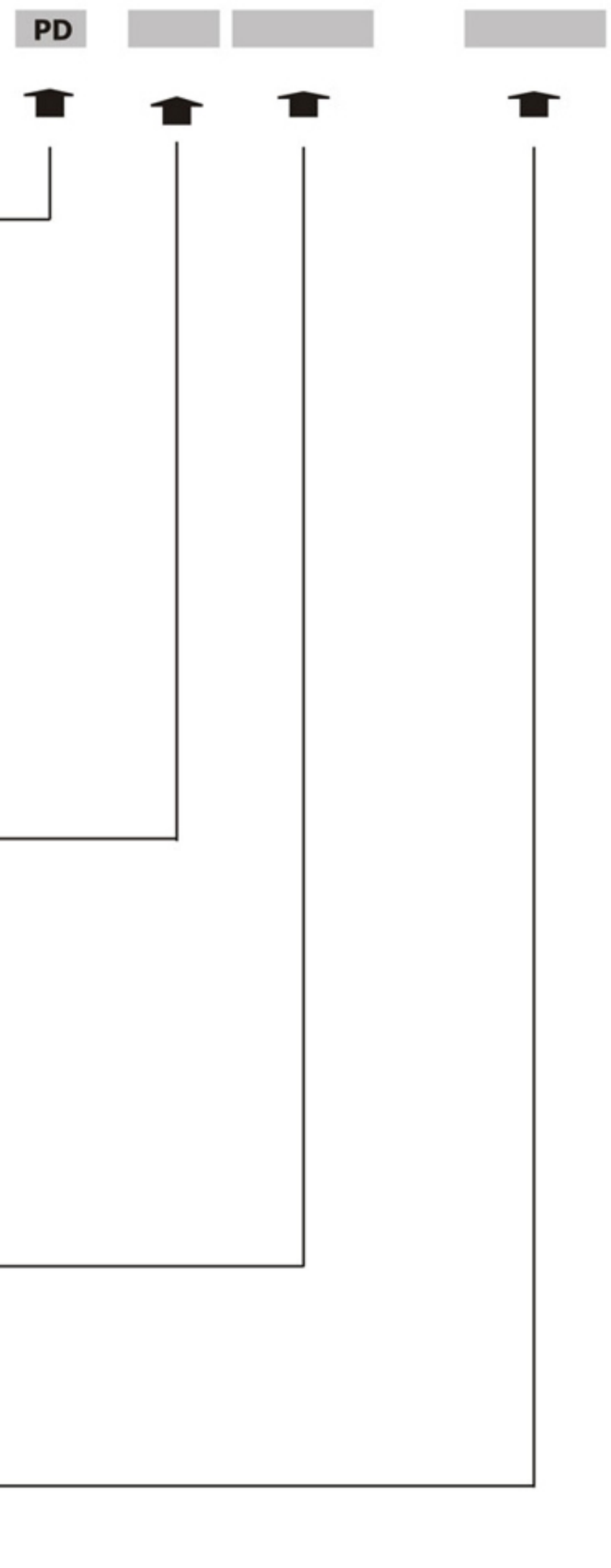

Basic Design:

Prefix for housings: Housing for

-Normal radial' and axial loads	N
-Predominant or alternating axial loads	P
-Heavy radial and normal axial loads	R

Prefix for units (housings, bearings and shaft):

Housing	Bearing type[1]) Non-locating side	locating side	
PDN	BB1	BA2	A
PDN	BB1	BB1	B
PDN	BC1	BC1	D
PDN	BC1	BB1	E
PDN	BC1	BA2	F
PDN	BS2	BS2	L
PDN	BC1	BS2	M
PDN	BS2	BB1	T
PDP	BC1	BC1	D
PDP	BC1	BB1	E
PDP	BC1	BA2	F
PDP	BC1	BS2	M
PDR	BC1	BC1-BB1	J

1) BA2= Matched set of 2 angular contact ball bearings
BB1= Deep groove ball bearing
BC1= Cylindrical roller bearing
BC2= Spherical roller bearing

Size designation: e.g.305

Supplementary designations

Spacers and large bore in end cover At both sides DD

PDP or PDR housing without spacers U

Masta®
PRECISION HOUSINGS

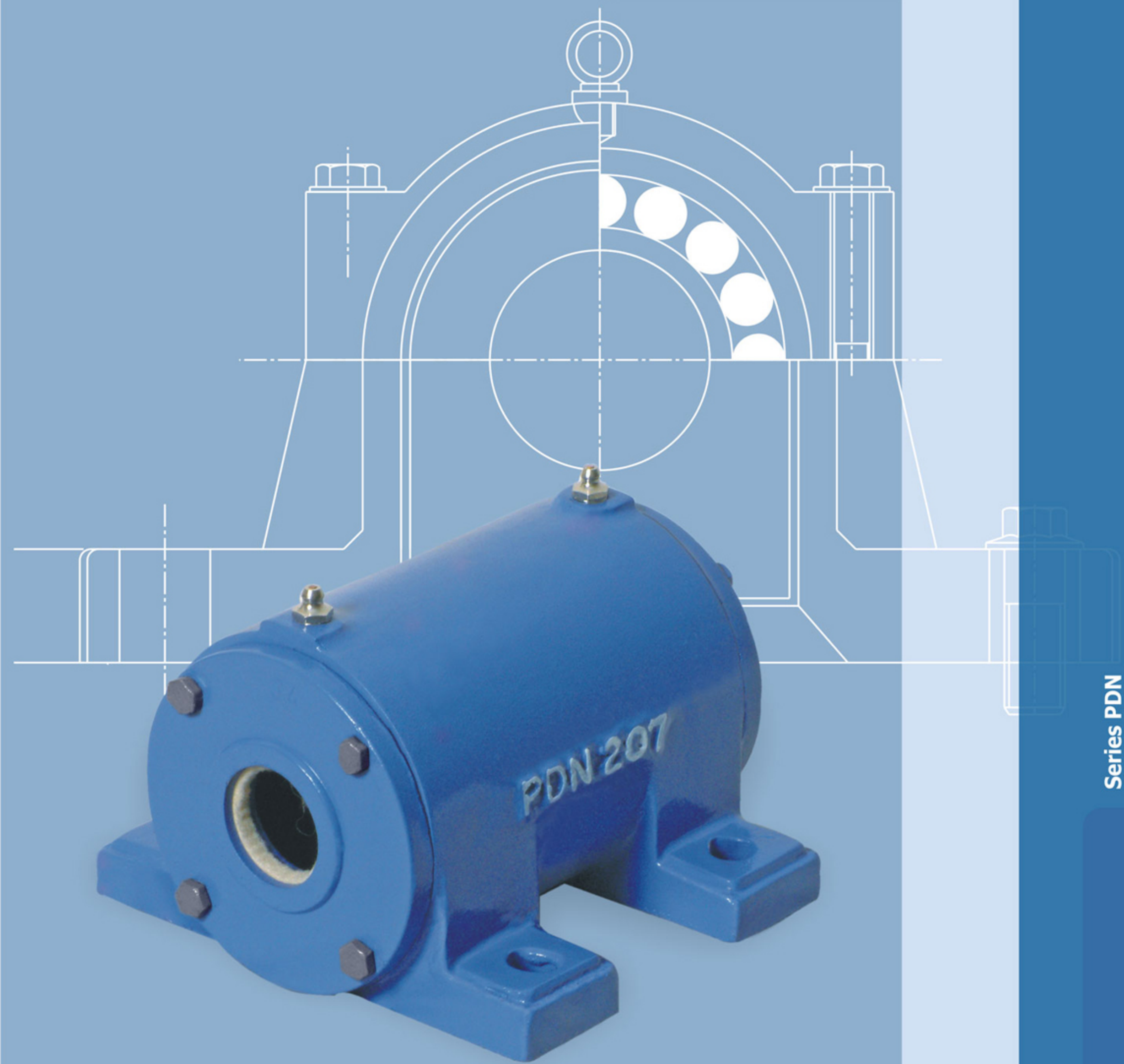

PDN Series

PDN Series Two Bearing Housings

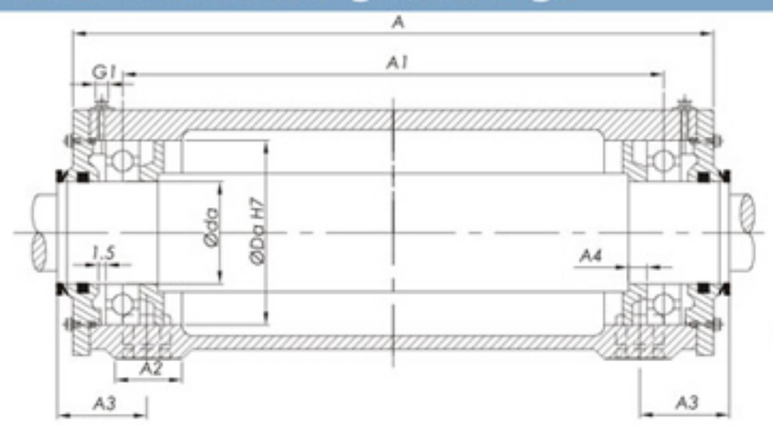

SECTION X-X

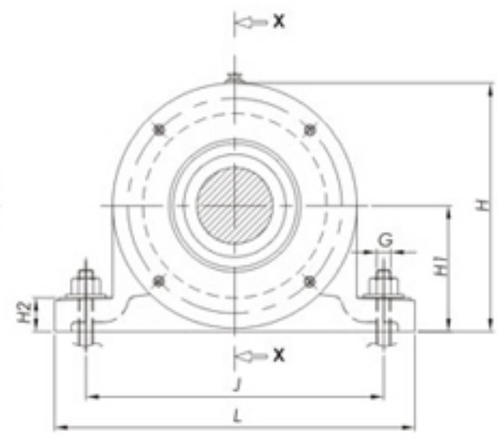

ELEVATION

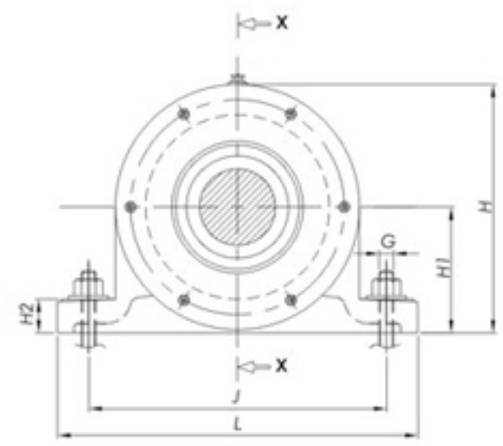

ELEVATION

6 bolts on side covers from PDN 212 and PDN 310 and above size

Plummer Block Designation	Shaft dia	DIMENSION IN MM															Appropriate Bearing	Components	
	da mm	A	A1	A2	A3	A4	Da	H	H1	H2	J	J1	L	N	G	G1		V-Ring	Fet Strips
PDN 305	25	202	146.5	35	40.5	7	62	95	50	16	120	135	155	12	10	1/8	6305	V-25 A	FS 190
PDN 206	30	197	147.5	35	37.5	7	62	95	50	16	120	135	155	12	10	1/8	6206	V- 30 A	
PDN 306	30	226	171.5	40	45	7	72	100	50	18	130	150	160	15	12	1/8	6306	V- 30 A	FS 190
PDN 207	35	227	173.5	40	45	7	72	100	50	18	130	150	160	15	12	1/8	6207	V-35 A	
PDN 307	35	260	195.5	45	49.5	8	80	116	60	18	150	175	190	15	12	1/8	6307	V-35 A	FS 190
PDN 208	40	259	198.5	45	49.5	8	80	116	60	18	150	175	190	15	12	1/8	6208	V-40 A	
PDN 308	40	315	255.5	52	53	10	90	121	60	20	150	225	190	15	12	1/8	6308	V-240 A	FS 190
PDN 309	45	360	279.5	52	63	10	100	137	70	22	170	250	210	15	12	1/8	6309	V-45A	FS 190
PDN 210	50	314	258.5	52	52	10	90	121	60	20	150	225	190	15	12	1/8	6210	V-50 A	
PDN 310	50	377	311.5	60	59	10	110	142	70	25	170	275	210	15	12	1/8	6310	V-50 A	FS 260
PDN 211	55	356	283.5	52	60.5	10	100	137	70	22	170	250	210	15	12	1/8	6211	V -55 A	
PDN 311	55	422	335.5	60	69	10	120	158	80	25	210	300	260	19	16	1/8	6311	V-55A	FS 260
PDN 212	60	376	316.5	60	58	10	110	142	70	25	170	275	210	15	12	1/8	6212	V-60A	
PDN 312	60	460	383.5	70	68	10	130	165	80	25	210	340	260	19	16	1/8	6312	V- 60A	FS 260
PDN 313	65	492	402.5	70	74	11	140	185	95	25	230	360	280	19	16	1/4	6313	V- 65A	FS 260
PDN 214	70	459	390.5	70	69	10	125	165	80	25	210	340	260	19	16	1/8	6214	V- 70A	
PDN 314	70	512	420.5	70	76	11	150	190	95	25	230	380	290	19	16	1/4	6314	V- 70A	FS 330

PDN Series bearing housings can be supplied with SHAFT and BEARINGS on order.

Masta®
PRECISION HOUSINGS

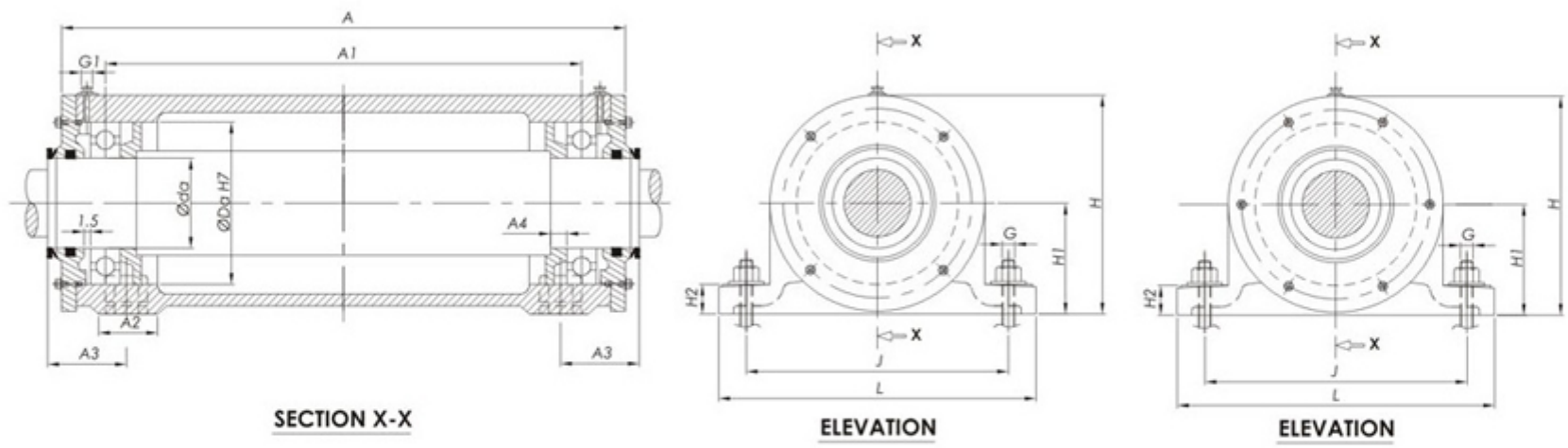

Plummer Block Designation	Shaft dia da mm	DIMENSION IN MM															Appropriate Bearing	Components	
		A	A1	A2	A3	A4	Da	H	H1	H2	J	J1	L	N	G	G1		V-Ring	Fet Strips
PDN 215	75	459	389.5	70	69	10	130	165	80	25	210	340	260	19	16	1/8	6215	V- 75A	
PDN 315	75	547	448.5	80	83.5	12	160	200	100	30	260	400	320	19	16	1/4	6315	V-75A	FS 330
PDN 216	80	493	409.5	70	76	11	140	185	95	25	230	360	280	19	16	1/4	6216	V-80A	
PDN 316	80	556	466.5	80	78	12	170	220	112	30	260	420	320	19	16	1/4	6316	V-80A	FS 330
PDN 317	85	590	486	80	85	12	180	225	112	30	290	440	350	19	16	1/4	6317	V-85A	FS 330
PDN 218	90	543	455.5	80	81	12	160	200	100	30	260	400	320	19	16	1/4	6218	V- 90A	
PDN 318	90	605	510	85	82.5	11	190	230	112	30	290	460	350	19	16	1/4	6318	V- 90A	FS 370
PDN 319	95	648	540	90	94	13	200	253	125	36	320	480	400	24	20	1/4	6319	V- 95A	FS 370
PDN 220	100	588	493	80	83.5	12	180	225	112	30	290	440	350	19	16	1/4	6220	V- 100A	
PDN 320	100	673	570	95	96.5	11.5	215	264	130	40	320	500	400	24	20	1/4	6320	V- 100A	FS 460
PDN 222	110	634	547	90	88	13	200	253	125	36	320	480	400	24	20	1/4	6222	V-110A	
PDN 322	110	686	580	95	94.5	10	240	296	150	40	380	520	450	28	24	1/4	6322	V-110A	FS 460
PDN 224	120	672	577	95	97	11.5	215	264	130	40	320	500	400	24	20	1/4	6224	V-120A	
PDN 324	120	707	600	100	96	11.5	260	322	160	40	410	538	500	35	30	1/4	6324	V - 120 A	FS 460

PDN Series bearing housings can be supplied with SHAFT and BEARINGS on order.

Illustration for 7225 Series

Last two digits of bearing

Housing for end shaft (with closed end) – A
Or
Housing for through shaft (Both ends open) - B

(One felt strip per Housing for A type
Two felt strips per Housing for B type
Flanged bearing housings.)

Triangular flanged and square flanged bearing housings are made of grey cast iron material and are suitable for self aligning ball bearings of 1200 K, 2200 K and spherical roller 22200K bearings with adapter sleeves.

The flanged bearing housings are equipped with felt seals closed end housings are designated as A and through shaft are type B.

Masta®
PRECISION HOUSINGS

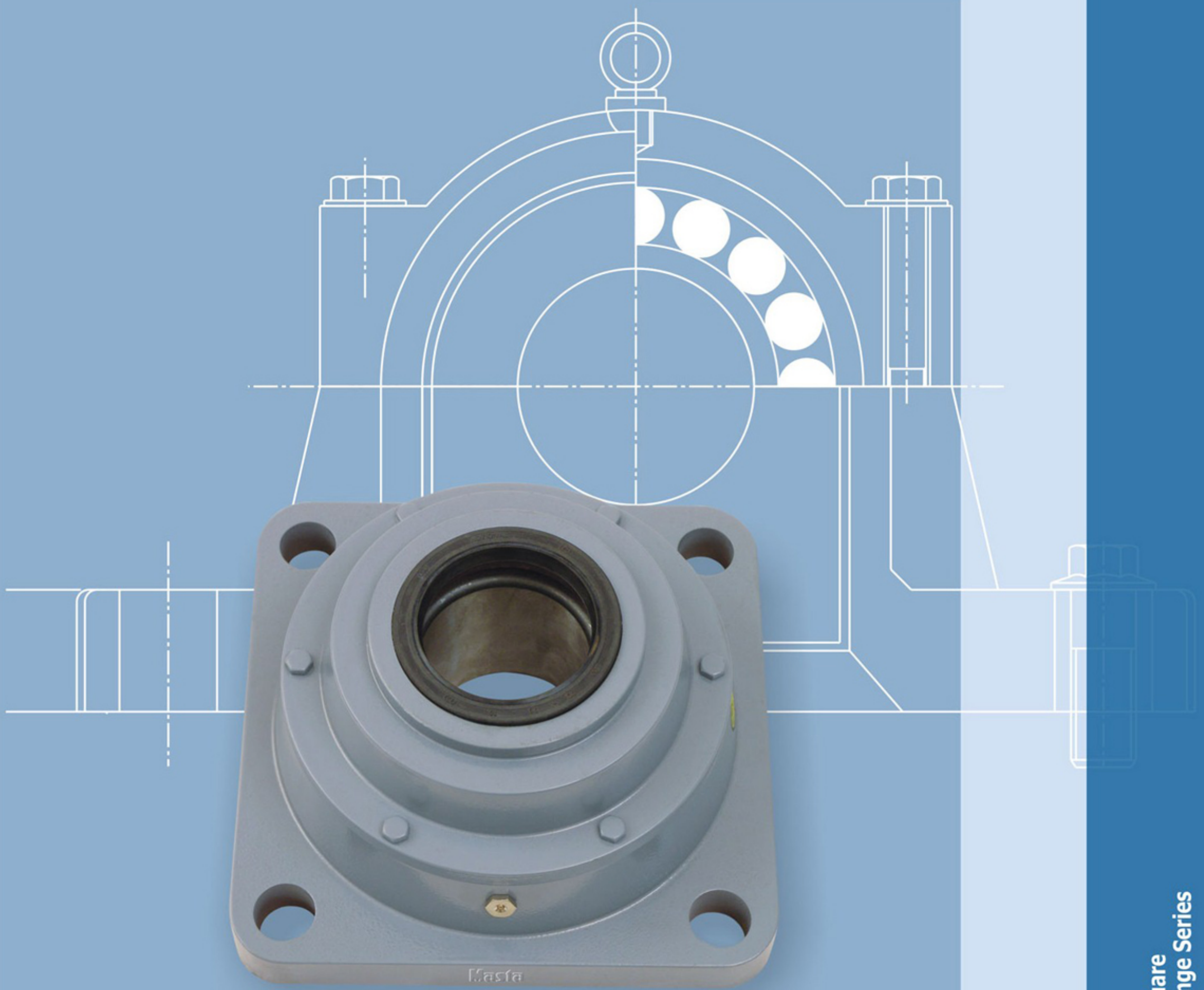

Square Flange Series

Masta®
PRECISION HOUSINGS

722500 Series Square Flange Bearing Housings

Masta Brand Triangular Flanged Bearing Housing for bearing with adapter sleeve.

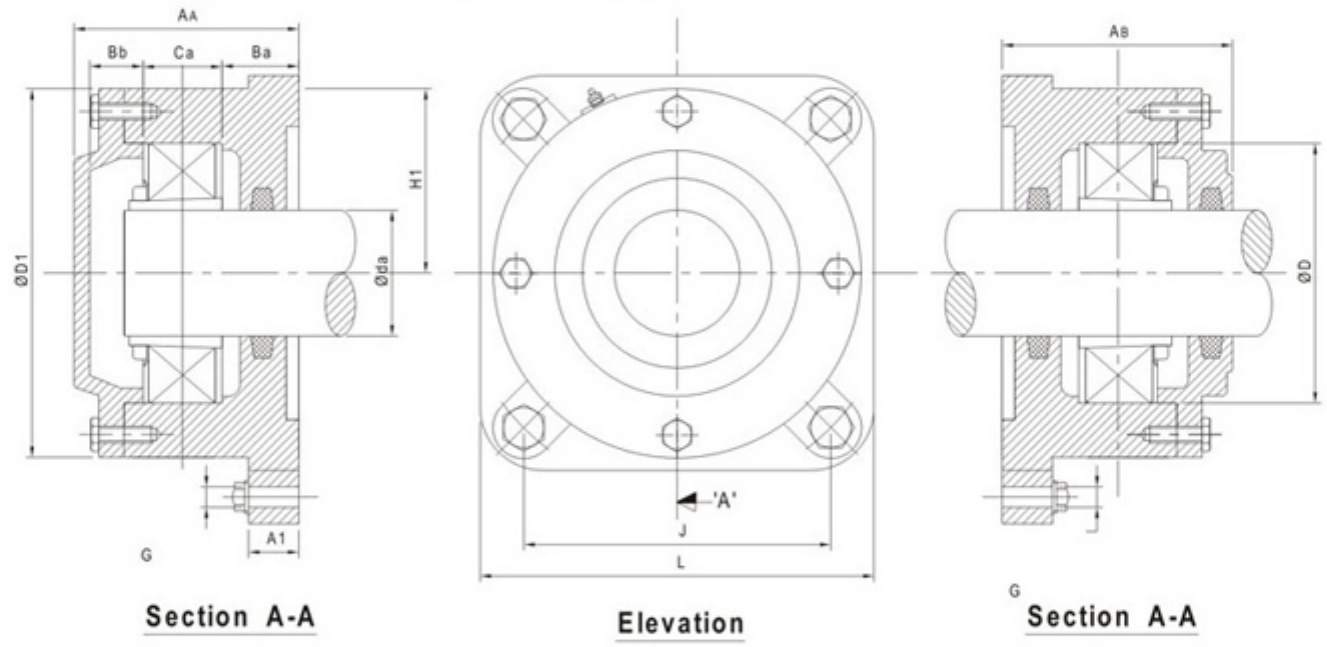

Plummer Block Designation	Shaft dia	DIMENSION IN MM												Appropriate Bearing No. Sleeve	Felt Strip
		AA	AB	A1	Ba	Bb	D1	H1	J	L	G	Ca	D		
722515	65	104	104	25	30	27	168	95	152	190	16	41	130	1215 EK + H 215 2215 EK + H 315 22215 EK+ H 315	FS 260
722516	70	110	110	25	31	30	176	98	152	196	16	43	140	1216 EK + H 216 2216 EK + H 316 22216 EK+ H 316	FS 330
722517	75	114	114	25	31	30	188	105	170	210	16	46	150	1217 EK + H 217 2217 EK + H 317 22217 EK+ H 317	FS 330
722518	80	118	118	25	30	31	198	105	170	210	16	50	160	1218 EK + H 218 2218 EK + H 318 22218 EK+ H 318	FS 330
722520	90	127	127	30	33	33	224	125	198	250	20	56	180	1220 EK + H 220 2220 EK + H 320 22220 EK+ H 320	FS 370
722522	100	137	137	30	38	38	246	135	219	270	20	63	200	1222 EK + H 222 2222 EK + H 322 22222 EK+ H 322	FS 460

Masta®
PRECISION HOUSINGS

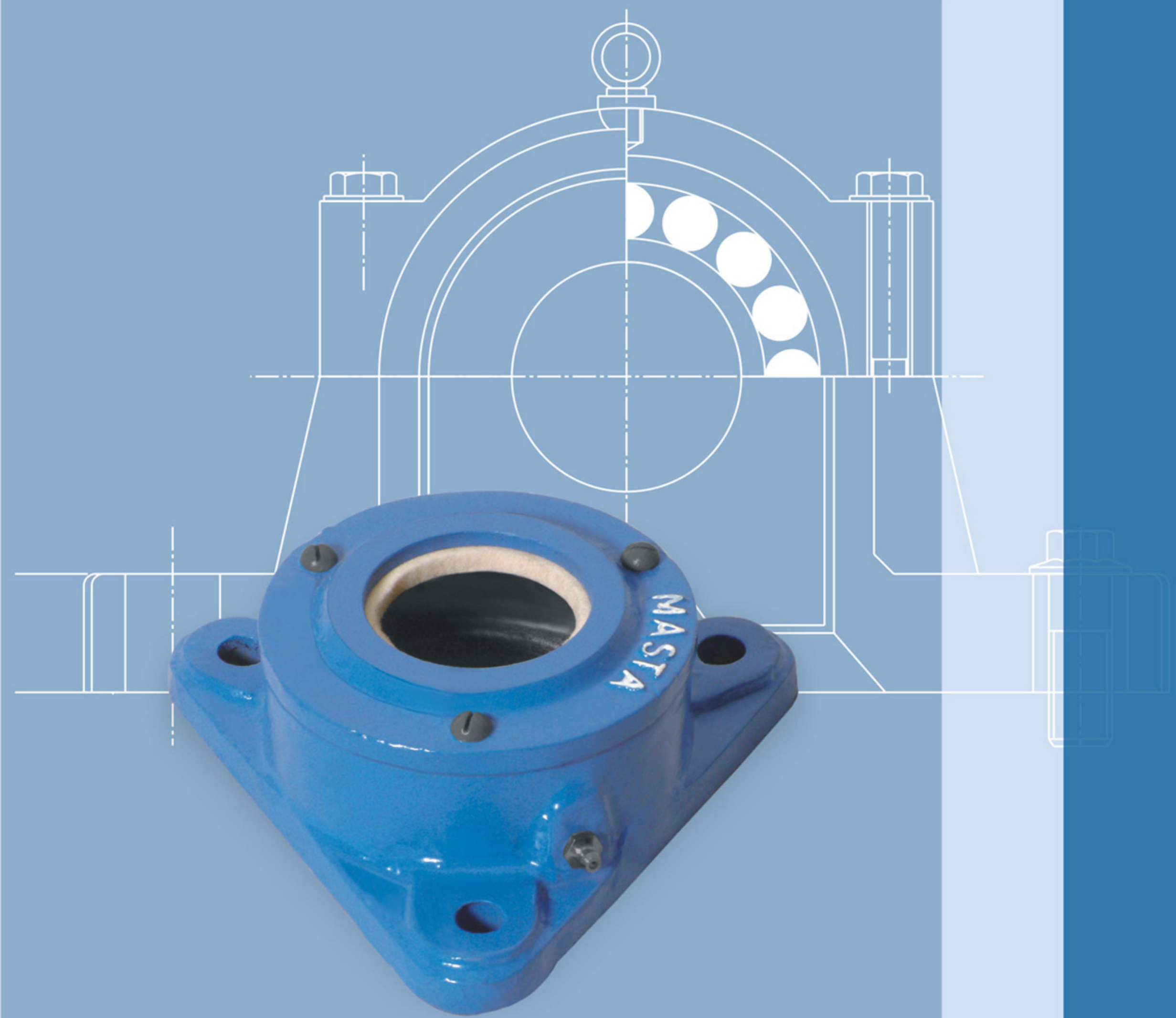

Triangular Flange Series

About S Series

"MASTA" 'S' Series plummer blocks are manufactured in wide range from ¾" (20mm) to 8" (200mm) shaft size, suitable for double row self aligning Ball/Roller bearings. Series S-500 is suitable for 1200 K, 2200 K, 22200 CK bearings and Series S-600 is suitable for 1300 K, 2300 K and 22300CK series bearings with adapter sleeves.

Series of Plummer Blocks	Suitable for Bearing Series
S-500	1200 K,2200K,22200 CK series bearings with Adapter Sleeves
S-600	1300 K,2300K,22300 CK series bearings with Adapter Sleeves
S-200	1200, 2200, 22200 C series of Cylindrical (Straight) bore bearings
S-300	1300, 2300, 22300 C series of Cylindrical (Straight) bore bearings

Triangular Flange Series Bearing Housings

Masta Brand Triangular Flanged Bearing Housing for bearing with adapter sleeve.

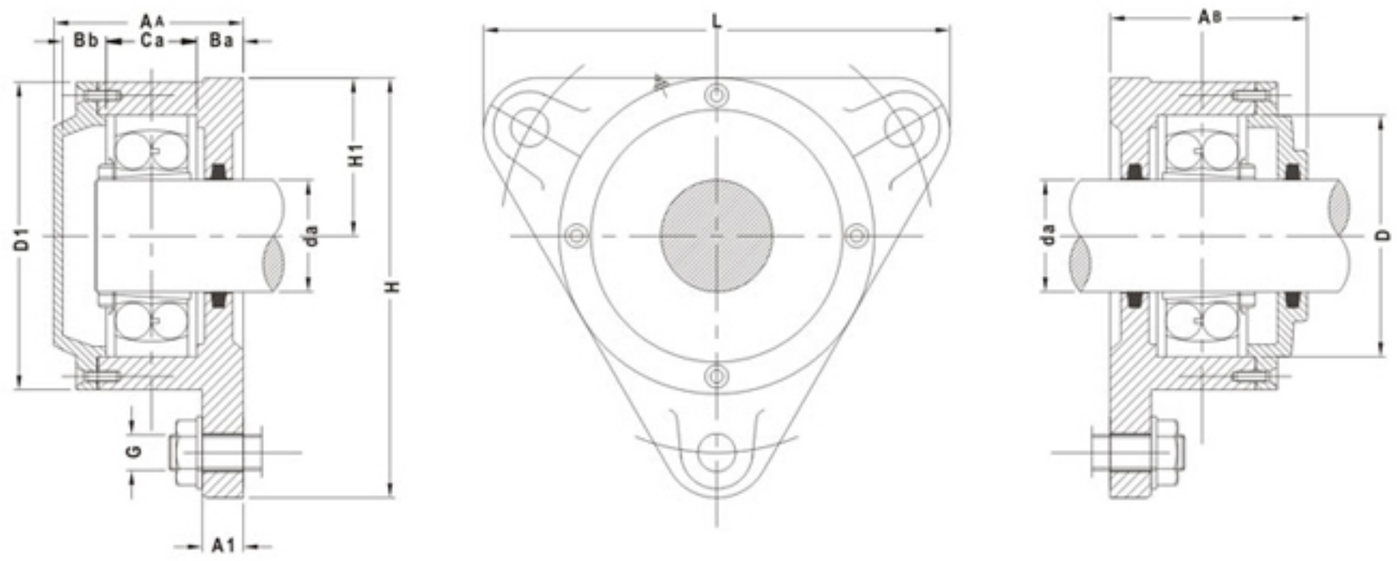

Plummer Block Designation	Shaft dia	DIMENSION IN MM													Appropriate Bearing No. Sleeve	Felt Strip
		AA	AB	A1	Ba	Bb	D1	H	H1	J	L	G	Ca	D		
722505	20	51.5	56.5	10	15	12.5	75	100	38	96	110	10	20	52	1205 EK + H 205 2205 EK + H 305 22205 EK + H 305	FS110
722506	25	57	59.5	12	16	15	86	117	44	116	130	10	22	62	1206 EK + H 206 2206 EK + H 306 22206 EK+ H 306	FS190
722507	30	59.5	63.5	12	16	14.5	97	130	48.5	130	145	12	25	72	1207 EK + H 207 2207 EK + H 307 22207 EK+ H 307	FS190
722508	35	64	65.5	12	17	18	108	143	54	140	160	12	25	80	1208 EK + H 208 2208 EK + H 308 22208 EK+ H 308	FS 190
722509	40	64.5	69.5	12	19	16.5	113	160	60	160	180	12	25	85	1209 EK + H 209 2209 EK + H 309 22209 EK+ H 309	FS190
722510	45	68.5	73	15	22	17.5	118	160	60	160	180	12	25	90	1210 EK + H 210 2210 EK + H 310 22210 EK+ H 310	FS 190
722511	50	75.5	81.5	15	24	19.5	128	172	65	170	192	12	27	100	1211 EK + H 211 2211 EK + H 311 22211 EK+ H 311	FS260
722512	55	77	82	15	23	19	142	189	72	180	210	12	30	110	1212 EK + H 212 2212 EK + H 312 22212 EK+ H 312	FS 260
722513	60	80	86	15	22	20	152	203	78	190	225	12	30	120	1213 EK + H 213 2213 EK + H 313 22213 EK+ H 313	FS 260

Masta®
PRECISION HOUSINGS

Masta Brand Flanged HousingSeries F 112 for self alingning ball bearing with extended inner ring

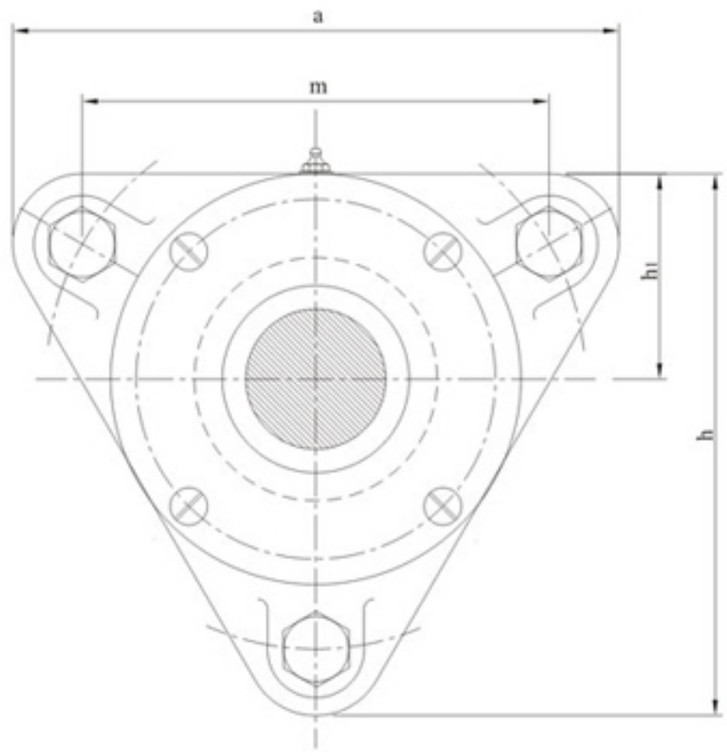

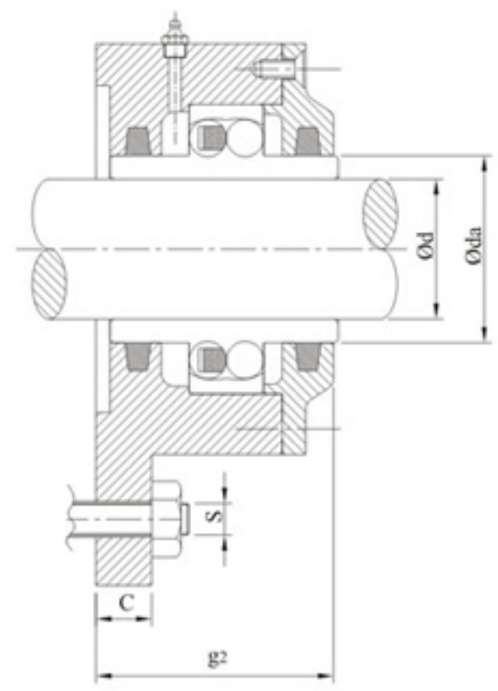

Housing Number	Shaft dia		DIMENSION IN MM								Felt Strip	Appropriate Bearing No.
	d	da	a	c	g2	h	h1	m	s	D		
F11204	20	28.9	105	10	42	35	92	90	M 10	47	5 x 4 x 80	11204 TV
F11205	25	33.3	110	10	46	38	100	96	M 10	52	5 x 4x 120	11205 TV
F11206	30	40.1	130	12	49	44	117	116	M 10	62	5 x 4x 145	11206 TV
F11207	35	47	145	12	54	48.5	129.5	130	M 12	72	5 x 4x165	11207 TV
F11208	40	54	160	12	60	54	143	140	M 12	80	5 x 4 x 185	11208 TV
F11 209	45	57.7	180	15	62.5	60	160	160	M 12	85	5 x 4x 197	11209 TV
F11 210	50	61.7	180	15	62.5	60	160	160	M 12	90	5 x 4 x 213	11210TV

Masta Brand Triangular Flanged Bearing Housings F 500 Series

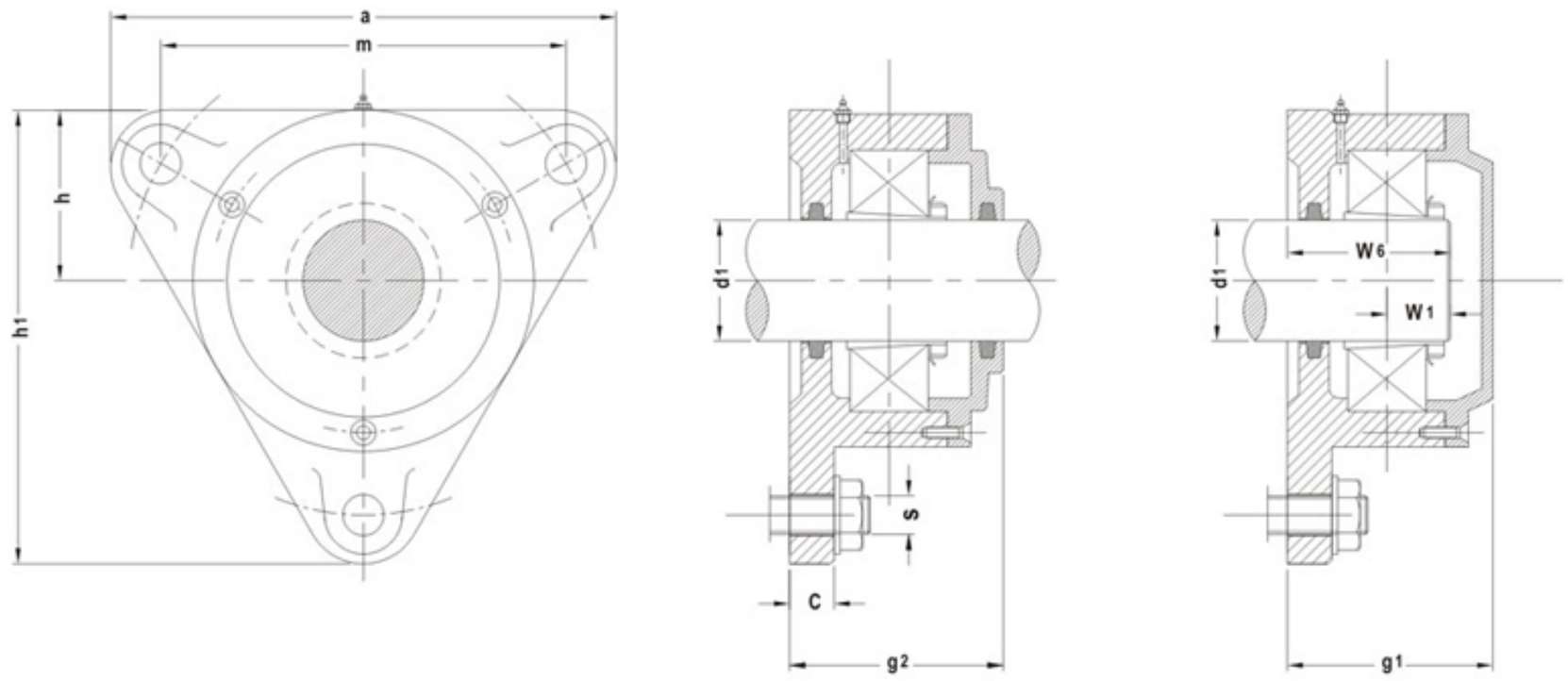

Housing Designation	Shaft Di d1	Housing Dimensions in mm									S		Felt Strip a x b x l	Qty.	Bearing Number		Adapter Sleeve	Locating Ring Size	Qty.
		a	c	g1	g2	h	h1	m	w1	w6	mm	inch							
F 505 A	20	110	10	50	-	38	100	96	19	42	M10	3/8	5 x 4 x 90	1	1205 K	20205K.C3	H205	FRB 52/2	1
B		110	10	-	55	38	100	96	-	-	M10	3/8	5 x 4 x 90	2	1205 K	20205K.C3	H205	FRB 52/2	1
WA		110	10	50	-	38	100	96	20	43	M10	3/8	5 x 4 x 90	1	2205 K	22205ESK.TVPB	H305	FRB 52/2	1
WB		110	10	-	55	38	100	96	-	-	M 10	3/8	5 x 4 x 90	2	2205 K	22205ESK.TVPB	H305	FRB 52/2	1
F 506 A	25	130	12	55	-	44	117	116	19	45	M10	3/8	6 x 5 x 115	1	1206 K	20206K.C3	H206	FRB 62/2	1
B		130	12	-	57	44	117	116	-	-	M10	3/8	6 x 5 x 115	2	1206 K	20206K.C3	H206	FRB 62/2	1
WA		130	12	55	-	44	117	116	21	47	M10	3/8	6 x 5 x 115	1	2206 K	22206ESK.TVPB	H306	FRB 62/2	1
WB		130	12	-	57	44	117	116	-	-	M 10	3/8	6 x 5 x 115	2	2206 K	22206ESK.TVPB	H306	FRB 62/2	1
F 507 A	30	145	12	57	-	48.5	130	130	21	46	M12	1/2	6 x 5 x 130	1	1207 K	20207K.C3	H207	FRB 72/2	1
B		145	12	-	60	48.5	130	130	-	-	M12	1/2	6 x 5 x 130	2	1207 K	20207K.C3	H207	FRB 72/2	1
WA		145	12	63	-	48.5	130	130	24	52	M12	1/2	6 x 5 x 130	1	2207 K	22207ESK.TVPB	H307	FRB 72/2	1
WB		145	12	-	66	48.5	130	130	-	-	M 12	1/2	6 x 5 x 130	2	2207 K	22207ESK.TVPB	H307	FRB 72/2	1
F 508 A	35	160	12	65	-	54	143	140	22	53	M12	1/2	6 x 5 x 145	1	1208 K	20208K.C3	H208	FRB 80/2	1
B		160	12	-	66	54	143	140	-	-	M12	1/2	6 x 5 x 145	2	1208 K	20208K.C3	H208	FRB 80/2	1
WA		160	12	70	-	54	143	140	25	58	M12	1/2	6 x 5 x 145	1	2208 K	22208ESK.TVPB	H308	FRB 80/2	1
WB		160	12	-	71	54	143	140	-	-	M 12	1/2	6 x 5 x 145	2	2208 K	22208ESK.TVPB	H308	FRB 80/2	1
F 509 A	40	180	15	65	-	60	160	160	24	55	M12	1/2	6 x 5 x 160	1	1209 K	202059K.C3	H209	FRB 85/2	1
B		180	15	-	70	60	160	160	-	-	M12	1/2	6 x 5 x 160	2	1209 K	20209K.C3	H209	FRB 85/2	1
WA		180	15	69	-	60	160	160	26	59	M12	1/2	6 x 5 x 160	1	2209 K	22209ESK.TVPB	H309	FRB 85/2	1
WB		180	15	-	74	60	160	160	-	-	M 12	1/2	6 x 5 x 160	2	2209 K	22209ESK.TVPB	H309	FRB 85/2	1
F 510 A	45	180	15	65	-	60	160	160	25	55	M12	1/2	6 x 5 x 175	1	1210K.TV.C3	20210K.MB.C3	H210	FE90/2	1
B		180	15	-	70	60	160	160	-	-	M12	1/2	6 x 5 x 175	2	1210K.TV.C3	20210K.MB.C3	H210	FE90/2	1
WA		180	15	71	-	60	160	160	27	61	M12	1/2	6 x 5 x 175	1	2210K.TV.C3	22210ESK.TVPB	H310	FE90/2	1
WB		180	15	-	76	60	160	160	-	-	M12	1/2	6 x 5 x 175	2	2210K.TV.C3	22210ESK.TVPB	H310	FE90/2	1
F 511 A	50	190	16	71	-	65	170	170	26	59	M12	1/2	8 x 6.5 x 200	1	1211K.TV.C3	20211K.MB.C3	H211	FE100/2	1
B		190	16	-	76	65	170	170	-	-	M12	1/2	8 x 6.5 x 200	2	1211K.TV.C3	20211K.MB.C3	H211	FE100/2	1
WA		190	16	77	-	65	170	170	28	65	M12	1/2	8 x 6.5 x 200	1	2211K.TV.C3	22211ESK.TVPB	H311	FE100/2	1
WB		190	16	-	82	65	170	170	-	-	M12	1/2	8 x 6. 5 x 200	2	2211K.TV.C3	22211ESK.TVPB	H311	FE100/2	1
F 512 A	55	206	16	73	-	70	185	180	27	62	M12	1/2	8 x 6.5 x 215	1	1212K.TV.C3	20212K.MB.C3	H212	FE110/2	1
B		206	16	-	78	70	185	180	-	-	M12	1/2	8 x 6.5 x 215	2	1212K.TV.C3	20212K.MB.C3	H212	FE110/2	1
WA		206	16	79	-	70	185	180	30	68	M12	1/2	8 x 6.5 x 215	1	2212K.TV.C3	22212ESK.TVPB	H312	FE110/2	1
WB		206	16	-	84	70	185	180	-	-	M12	1/2	8 x 6. 5 x 215	2	2212K.TV.C3	22212ESK.TVPB	H312	FE110/2	1
F 513 A	60	219	16	75	-	75	198	190	28	63	M12	1/2	8 x 6.5 x 230	1	1213K.TV.C3	20213K.MB.C3	H213	FE120/2	1
B		219	16	-	79	75	198	190	-	-	M12	1/2	8 x 6.5 x 230	2	1213K.TV.C3	20213K.MB.C3	H213	FE120/2	1
WA		219	16	83	-	75	198	190	32	71	M12	1/2	8 x 6.5 x 230	1	2213K.TV.C3	22213ESK.TVPB	H313	FE120/2	1
WB		219	16	-	87	75	198	190	-	-	M12	1/2	8 x 6. 5 x 230	2	2213K.TV.C3	22213ESK.TVPB	H313	FE120/2	1

Masta®
PRECISION HOUSINGS

Masta Brand Square Flanged Bearing Housing F 500 Series

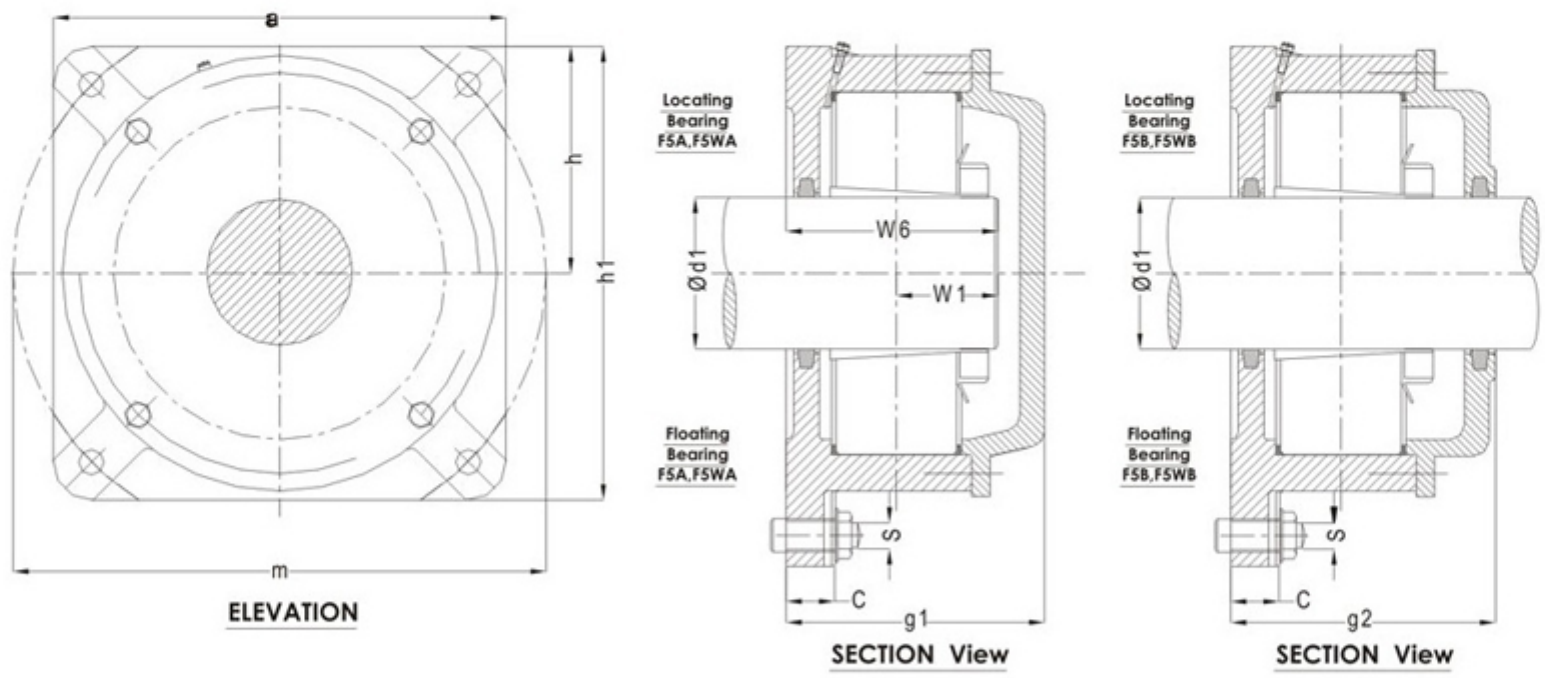

Housing Designation	Shaft Di d1	Housing Dimensions in mm									S		Felt Strip a x b x l	Qty.	Bearing Number		Adapter Sleeve	Locating Ring Size	Qty.
		a	c	g1	g2	h	h1	m	w1	w6	mm	inch							
F 515 A	65	190	25	100	-	95	190	215	30	80	M16	5/8	8 x 6.5 x 245	1	1215K.TV.C3	20215K.MB.C3	H215	FR130/8	2
B		190	25	-	104	95	190	215	-	-	M16	5/8	8 x 6.5 x 245	2	1215K.C3	20215ESK.MB.C3	H215	FR130/8	2
WA		190	25	100	-	95	190	215	33	78	M16	5/8	8 x 6.5 x 245	1	2215K.TV.C3	22215ESK.TVPB	H315	FR130/10	1
WB		190	25	-	104	95	190	215	-	-	M16	5/8	8 x 6. 5 x 245	2	2215K.C3	22215ESK.TVPB	H315	FR130/10	1
F 516 A	70	196	25	104	-	98	196	215	33	86	M16	5/8	9 x 7.5 x 270	1	1216K.TV.C3	20216K.MB.C3	H216	FR140/8.5	2
B		196	25	-	110	98	196	215	-	-	M16	5/8	9 x 7.5 x 270	2	1216K.TV.C3	20216K.MB.C3	H216	FR140/8.5	2
WA		196	25	104	-	98	196	215	36	84	M16	5/8	9 x 7.5 x 270	1	2216K.TV.C3	22216ESK.TVPB	H316	FR140/10	1
WB		196	25	-	110	98	196	215	-	-	M16	5/8	9 x 7. 5 x 270	2	2216K.TV.C3	22216ESK.TVPB	H316	FR140/10	1
F 517 A	75	210	25	109	-	105	210	240	35	89	M16	5/8	9 x 7.5 x 285	1	1217K.TV.C3	20217K.MB.C3	H217	FR150/9	2
B		210	25	-	114	105	210	240	-	-	M16	5/8	9 x 7.5 x 285	2	1217K.TV.C3	20217K.MB.C3	H217	FR150/9	2
WA		210	25	109	-	105	210	240	39	88	M16	5/8	9 x 7.5 x 285	1	2217K.TV.C3	22217ESK.TVPB	H317	FR150/10	1
WB		210	25	-	114	105	210	240	-	-	M16	5/8	9 x 7. 5 x 285	2	2217K.TV.C3	22217ESK.TVPB	H317	FR150/10	1
F 518 A	80	210	25	113	-	105	210	240	36	90	M16	5/8	9 x 7.5 x 300	1	1218K.TV.C3	20218K.MB.C3	H218	FR160/10	2
B		210	25	-	118	105	210	240	-	-	M16	5/8	9 x 7.5 x 300	2	1218K.TV.C3	20218K.MB.C3	H218	FR160/10	2
WA		210	25	113	-	105	210	240	41	90	M16	5/8	9 x 7.5 x 300	1	2218K.TV.C3	22218ESK.TVPB	H318	FR160/10	1
WB		210	25	-	118	105	210	240	-	-	M16	5/8	9 x 7.5 x 300	2	2218K.TV.C3	22218ESK.TVPB	H318	FR160/10	1
F 520 A	90	250	30	122	-	125	250	280	40	98	M20	3/4	10 x 8.5 x 335	1	1220K.TV.C3	20220K.MB.C3	H220	FR180/11	2
B		250	30	-	127	125	250	280	-	-	M20	3/4	10 x 8.5 x 335	2	1220K.TV.C3	20220K.MB.C3	H220	FR180/11	2
WA		250	30	122	-	125	250	280	46	98	M20	3/4	10 x 8.5 x 335	1	2220K.TV.C3	22220ESK.TVPB	H320	FR180/10	1
WB		250	30	-	127	125	250	280	-	-	M20	3/4	10 x 8. 5 x 335	2	2220K.TV.C3	22220ESK.TVPB	H320	FR180/10	1
F 522 A	100	270	30	131	-	135	270	310	43	105	M20	3/4	12 x 10 x 375	1	1222K.TV.C3	20222K.MB.C3	H222	FR200/13.5	2
B		270	30	-	137	135	270	310	-	-	M20	3/4	12 x 10 x 375	2	1222K.TV.C3	20222K.MB.C3	H222	FR200/13.5	2
WA		270	30	131	-	135	270	310	50	106	M20	3/4	12 x 10 x 375	1	2222K.TV.C3	22222ESK.TVPB	H322	FR200/10	1
WB		270	30	-	137	135	270	310	-	-	M20	3/4	12 x 10 x 375	2	2222K.TV.C3	22222ESK.TVPB	H322	FR200/10	1

I 1200 Series

Masta Brand Triangular Flanged Bearing Housing for self alingning ball bearings with Extended Inner ring

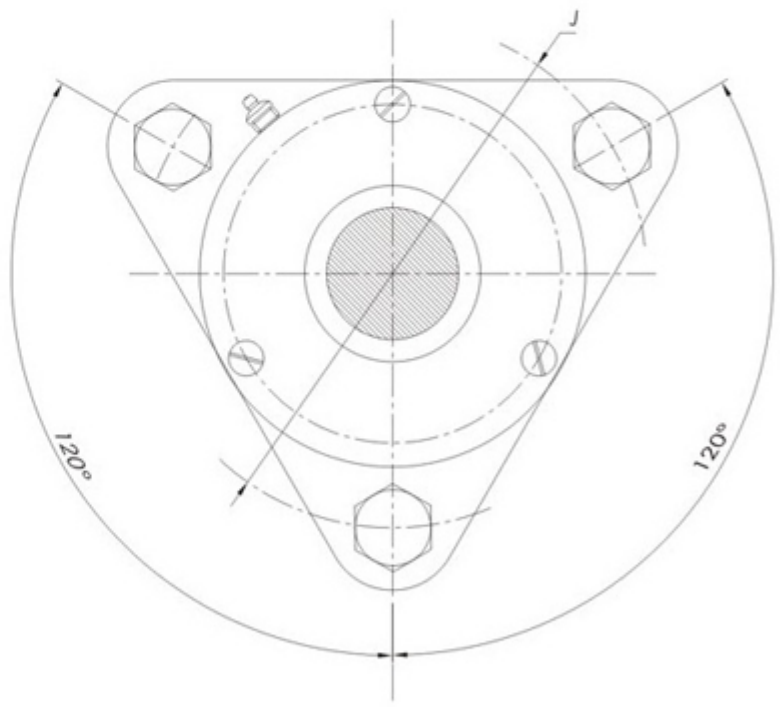

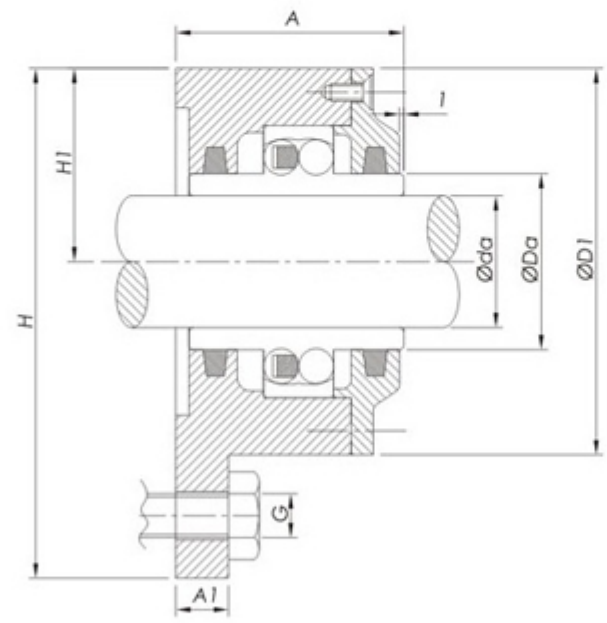

Plummer Block Designation	Shaft Diameter da	Dimensions in mm										Appropriate Bearing No.	Felt Strip
		A	A1	Da	D1	H	H1	J	L	G	D		
I - 120013 E	20	42	10	28.9	69	92.5	35	90	105	10	47	11204 E	FS 180
I - 120014	25	46	10	33.3	75	100	38	96	110	10	52	11205 E	FS 180
I - 120015	30	50	12	40.1	86	117	44	116	130	10	62	11206 E	FS 180
I - 120016 E	35	54	12	47	97	130	48.5	130	145	12	72	11207E	FS 180
I - 120017	40	60	12	54	108	143	54	140	160	12	80	11208 E	FS 300
I - 120018	45	62	12	57.7	113	160	60	160	180	12	85	11209 E	FS 300
I - 120019 E	50	63	15	61.7	118	160	60	160	180	12	90	11210 E	FS 300
I - 120021	60	67	15	78	142	189	72	180	210	12	110	11212 E	FS 300

Masta®
PRECISION HOUSINGS

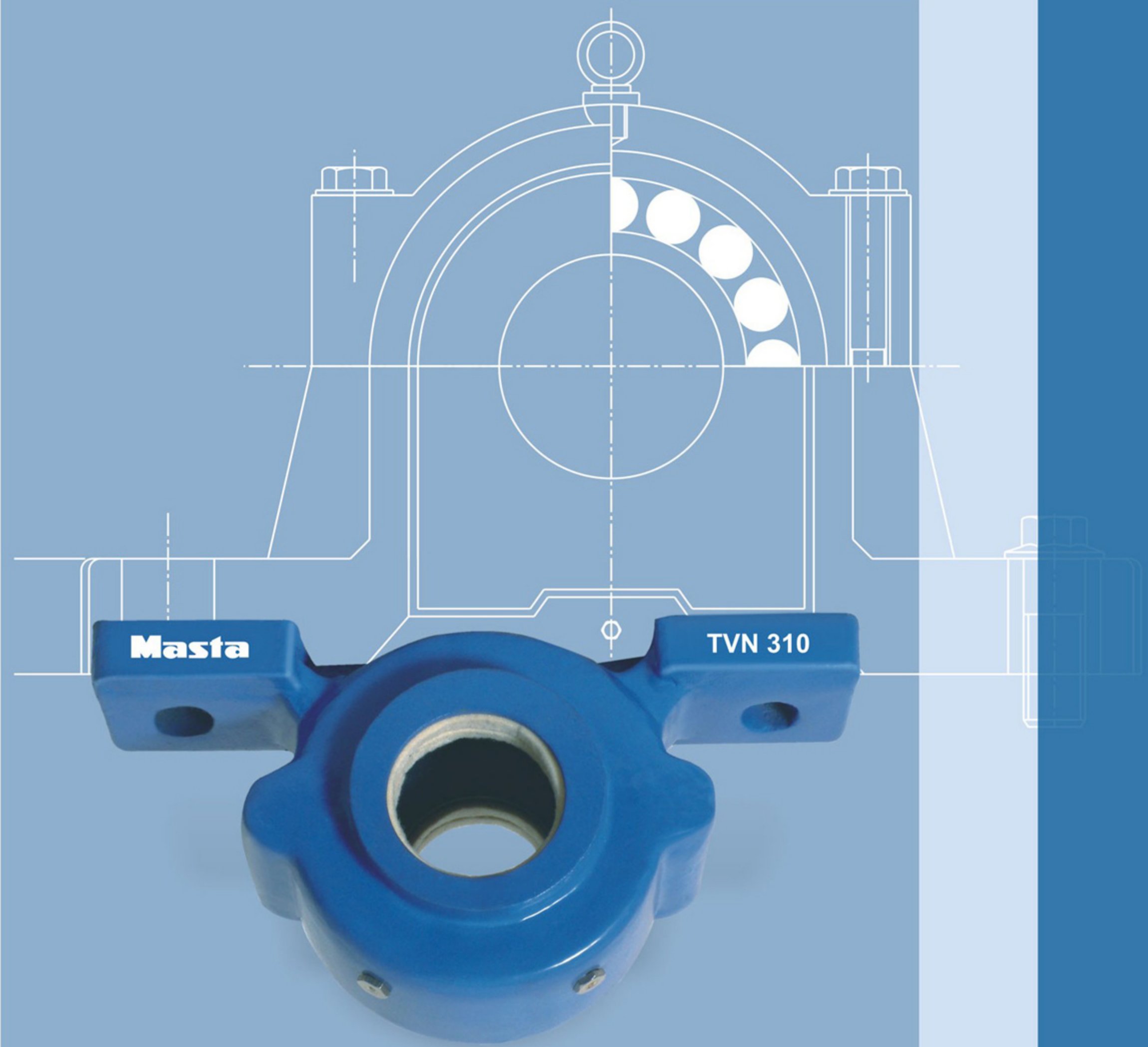

TVN Series

Masta Brand Bearing Housing Series TVN 200 Suitable for bearing with Cylindrical (straight) Bore 1200, 2200, 20200, 22200 Series Bearings

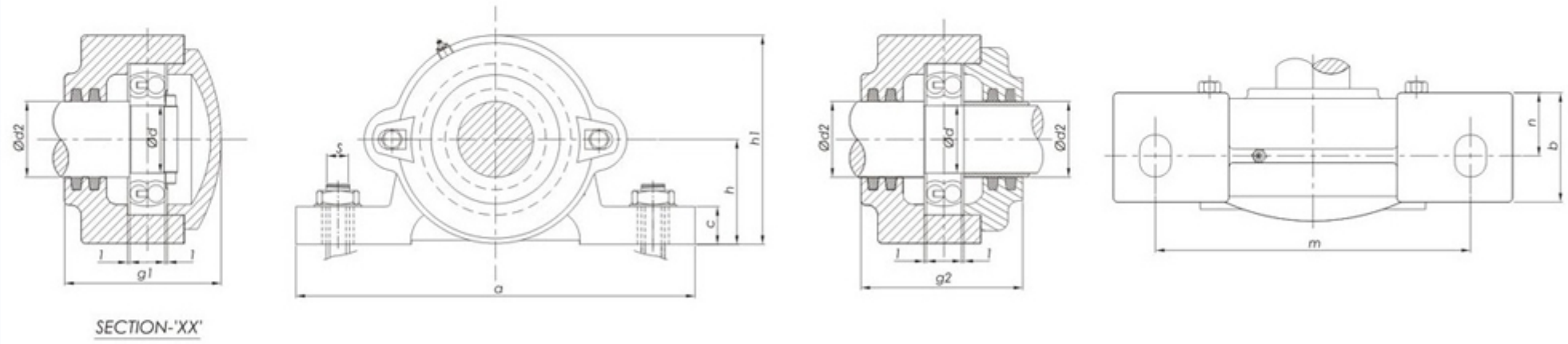

Housing Number	Shaft dia d	Housing Dimensions in mm										s mm
		d2	a	m	b	n	c	h	h1	g1	g2	
TVN 204 A/WA	20	25	150	110	45	25	14	35	69	61	__	M12
TVN 204 B/WB	20	25	150	110	45	25	14	35	69	-	68	M12
TVN 205 A/WA	25	30	170	130	45	25	16	40	79	63	__	M12
TVN 205 B/WB	25	30	170	130	45	25	16	40	79	-	71	M12
TVN 206 A/WA	30	35	190	150	52	30	16	50	94	71	__	M12
TVN 206 B/WB	30	35	190	150	52	30	16	50	94	-	76	M12
TVN 207 A/WA	35	45	190	150	52	30	18	50	99	77	__	M12
TVN 207 B/WB	35	45	190	150	52	30	18	50	99	-	78	M12
TVN 208 A/WA	40	50	210	170	60	35	18	60	114	86	__	M12
TVN 208 B/WB	40	50	210	170	60	35	18	60	114	-	92	M12
TVN 209 A/WA	45	55	210	170	60	35	20	60	117	87	__	M12
TVN 209 B/WB	45	55	210	170	60	35	20	60	117	-	92	M12
TVN 210 A/WA	50	60	210	170	60	35	20	60	119	90	__	M12
TVN 210 B/WB	50	60	210	170	60	35	20	60	119	-	94	M12
TVN 211A/WA	55	65	270	210	70	40	23	70	134	95	__	M16
TVN 211 B/WB	55	65	270	210	70	40	23	70	134	-	100	M16
TVN 212 A/WA	60	70	270	210	70	40	23	70	139	102	__	M16
TVN 212 B/WB	60	70	270	210	70	40	23	70	139	-	105	M16
TVN 213 A/WA	65	75	290	230	80	45	25	80	154	110	__	M16
TVN 213 B/WB	65	75	290	230	80	45	25	80	154	-	115	M16
TVN 214 A/WA	70	80	290	230	80	45	25	80	157	111	__	M16
TVN 214 B/WB	70	80	290	230	80	45	25	80	157	-	115	M16
TVN 215 A/WA	75	85	290	230	80	45	25	80	159	115	__	M16
TVN 215 B/WB	75	85	290	230	80	45	25	80	159	-	117	M16
TVN 216 A/WA	80	90	330	260	90	50	28	95	181	122	__	M20
TVN 216 B/WB	80	90	330	260	90	50	28	95	181	-	127	M20
TVN 217 A/WA	85	95	330	260	90	50	28	95	186	126	__	M20
TVN 217 B/WB	85	95	330	260	90	50	28	95	186	-	129	M20
TVN 218 A/WA	90	100	360	290	100	55	30	100	196	136	__	M20
TVN 218 B/WB	90	100	360	290	100	55	30	100	196	-	139	M20

Masta®
PRECISION HOUSINGS

Masta Brand Bearing Housing Series TVN 300 Suitable for bearing with Cylindrical (straight) Bore 1300, 2300, 20300, 22300 Series Bearings

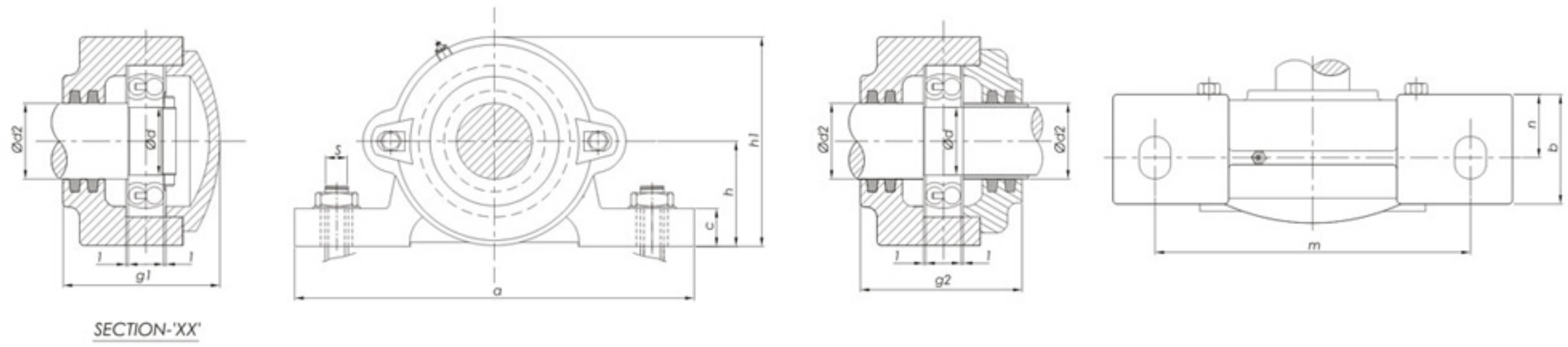

Housing Number	Shaft dia d	Housing Dimensions in mm										s mm
		d2	a	m	b	n	c	h	h1	g1	g2	
TVN 304 A/WA	20	25	170	130	45	25	16	40	79	63	__	M12
TVN 304 B/WB	20	25	170	130	45	25	16	40	79	-	71	M12
TVN 305 A/WA	25	30	190	150	52	30	16	50	94	71	__	M12
TVN 305 B/WB	25	30	190	150	52	30	16	50	94	-	76	M12
TVN 306 A/WA	30	35	190	150	52	30	18	50	99	77	__	M12
TVN 306 B/WB	30	35	190	150	52	30	18	50	99	-	78	M12
TVN 307 A/WA	35	45	210	170	60	35	18	60	114	86	__	M12
TVN 307 B/WB	35	45	210	170	60	35	18	60	114	-	92	M12
TVN 308 A/WA	40	50	210	170	60	35	20	60	119	90	__	M12
TVN 308 B/WB	40	50	210	170	60	35	20	60	119	-	94	M12
TVN 309 A/WA	45	55	270	210	70	40	23	70	134	95	__	M16
TVN 309 B/WB	45	55	270	210	70	40	23	70	134	-	100	M16
TVN 310 A/WA	50	60	270	210	70	40	23	70	139	102	__	M16
TVN 310 B/WB	50	60	270	210	70	40	23	70	139	-	105	M16
TVN 311A/WA	55	65	290	230	80	45	25	80	154	110	__	M16
TVN 311 B/WB	55	65	290	230	80	45	25	80	154	-	115	M16
TVN 312 A/WA	60	70	290	230	80	45	25	80	159	115	__	M16
TVN 312 B/WB	60	70	290	230	80	45	25	80	159	-	117	M16
TVN 313 A/WA	65	75	330	260	90	50	28	95	181	122	__	M20
TVN 313 B/WB	65	75	330	260	90	50	28	95	181	-	127	M20
TVN 314 A/WA	70	80	330	260	90	50	28	95	186	126	__	M20
TVN 314 B/WB	70	80	330	260	90	50	28	95	186	-	129	M20
TVN 315 A/WA	75	85	360	290	100	55	30	100	196	136	__	M20
TVN 315 B/WB	75	85	360	290	100	55	30	100	196	-	139	M20

Suffix	Type	Suitable for bearing Series	
		For TVN 200 Series	For TVN 300 Series
A	One End Closed	1200, 20200	1300, 20300
WA	One End Closed	2200, 22200	2300, 22300
B	For Through Shaft	1200, 20200	1300, 20300
WB	For Through Shaft	2200, 22200	2300, 22300

General Conversion Factors

Multiply	By	To Obtain	Multiply	By	To Obtain
Inch	25.4	Millimetres	Cubic Yards	0.7645	Cubic Metres
Inch	2.54	Centimetres	Cubic Feet	0.03704	Cubic Yards
Millimetres	0.03937	Inch	Cubic Yards	27	Cubic Feet
Centimetres	0.3937	Inch	Cubic Metres	1000	Litres
Feet	0.3048	Metres	Gallons	4.5461	Litres
Metres	3.2808	Feet	Litres	0.2197	Gallons
Yards	0.9144	Metres	Litres	61.02	Cubic Inches
Metres	1.0936	Yards	Litres	1000	Cubic Centimetres (C.C)
Miles	1.6093	Kilometres	Ounce	28.3495	Grams
Kilometres	0.6214	Miles	Grams	0.03527	Ounces
Square Inches	645.16	Square Millimetres	Pounds	0.4536	Kilograms
Square MM	0.00155	Square Inch	Kilograms	2.2046	Pounds
Square Feet	0.0929	Square Metres	Cwt.	50.8023	Kilograms
Square Metres	10.7639	Square Feet	Kilograms	0.01968	Cwts.
Square Yards	0.8361	Square Metres	Tons	1016.5	Kilograms
Square Metres	1.196	Square Yards	Tons	1.0165	Metric Tonnes
Acres	43560	Square Feet	Horse Power	33000	Foot-Lbs/Minute
Acres	4840	Square Yard	Horse Power	0.7457	Kilowatts
Acres	4047	Square Metres	Horse Power	745.7	Watts
Cubic Inch	16.3871	Cubic Centimetres	Quire	25	Sheets
Cubic Centimetres	0.06102	Cubic Inches	Ream	500	Sheets
Cubic Feet	0.02832	Cubic Metres	Temp (°C)	(1.8) + 32	Temp (°F)
Cubic Metres	35.3147	Cubic Feet	Temp (°F) - 32	5/9	Temp (°C)

Masta®
PRECISION HOUSINGS

Inch / Millimetres Conversion Table

Inch.		Millimetre
1/64	0.016	0.397
1/32	0.031	0.794
3/64	0.047	1.191
1/16	0.063	1.588
5/64	0.078	1.984
3/32	0.094	2.381
7/64	0.109	2.778
1/8	0.125	3.175
9/64	0.141	3.572
5/32	0.156	3.969
11/64	0.172	4.366
3/16	0.188	4.763
13/64	0.203	5.159
7/32	0.219	5.556
15/64	0.234	5.953
1/4	0.250	6.350
17/64	0.266	6.747
9/32	0.281	7.144
19/64	0.297	7.541
5/16	0.313	7.938
21/64	0.328	8.334
11/32	0.344	8.731
23/64	0.359	9.128
3/8	0.375	9.525
25/64	0.391	9.922
13/32	0.406	10.319
27/64	0.422	10.716
7/16	0.438	11.113
29/64	0.453	11.509
15/32	0.469	11.906
31/64	0.484	12.303
1/2	0.500	12.700

Inch.		Millimetre
33/64	0.516	13.097
17/32	0.531	13.494
35/64	0.547	13.891
9/16	0.563	14.288
37/64	0.578	14.684
19/32	0.594	15.081
39/64	0.609	15.478
5/8	0.625	15.875
41/64	0.641	16.272
21/32	0.656	16.669
43/64	0.672	17.066
11/16	0.688	17.463
45/64	0.703	17.859
23/32	0.719	18.256
47/64	0.734	18.653
3/4	0.750	19.050
49/64	0.766	19.447
25/32	0.781	19.844
51/64	0.797	20.241
13/16	0.813	20.638
53/64	0.828	21.034
27/32	0.844	21.431
55/64	0.859	21.828
7/8	0.875	22.225
57/64	0.891	22.622
29/32	0.906	23.019
59/64	0.922	23.416
15/16	0.938	23.813
61/64	0.953	24.209
31/32	0.969	24.606
63/64	0.984	25.003
1"	1.000	25.400

Masta®
PRECISION HOUSINGS

Masta Machinery Stores Pvt. Ltd.
553 | G.I.D.C. Kathwada | Odhav Road | Ahmedabad-382430 | INDIA
Phone: +91 79 22901220, 22901222 | Fax: +91 79 22900497 | E-mail: info@mastagroup.com
www.mastagroup.com