Hiding @ Depth:

Exploring & Subverting NAND Flash memory

Josh ‘m0nk’ Thomas

(A DARPA CFT Project by MonkWorks, LLC)
RIP 4.1.13 - Long Live CFT

Thx Mudge

./whoami (m0nk)

- Applied Research Scientist @ Accuvant
- blah blah blah blah blah
- I like to _X_:
  - _X_ = { blah blah blah blah blah blah blah blah blah blah blah blah blah blah }
- Find Me:
  - @m0nk_dot

echo $PROJECT_INFO

- Q: CAN I ALL THE THINGS?
  - Got tired of Air to Glass
  - Looking for a reliable way to hide files
  - Ooohh! Is that how NAND Works?
  - Really? So, I can probably reliably hide files?
  - Oh wow, That actually worked?
  - Wait, I can also do that... WTF?
- A: I CAN ALL THE THINGS!

Will he start already?

- Intro
- Defensive Postures (sorry)
- How NAND Flash Works (Hardware)
- How NAND Flash Works (Software)
- Options For How We Can Break It
- How I Broke It
- Forensics / Un-Breaking NAND (Defense Revisited)
- Now What?
- TL;DR:
  - https://github.com/monk-dot/NandX

Defensive Posture

- Don't Groan, This Will Be Short
- TL; DR:
  - This is elemental hardware design, there is no "fix"
  - Best bet until we get new tools?
    - Post Analysis, Logs and Forensics
  - Consider not using NAND?
    - Doubtful if you want to embed...

Science is hard, lets do Science!

NAND: Hard It Works

- Buckets - Might not be the technical term
- Pages - Typically 512, 2048 or 4096 bytes
- Blocks - Typically 16kb - 512kb
- Initially set to 1 (0xFF)
- Shifting to 0 is easy
- Shifting to 1 is hard

NAND: It's a Trap!

- Gates are hard to build and somewhat fragile...
  - Things break normally after ~10 - 100k writes
- Because they wear out, we do wear leveling to disperse the headache across the full surface
  - Wear leveling leaves residue

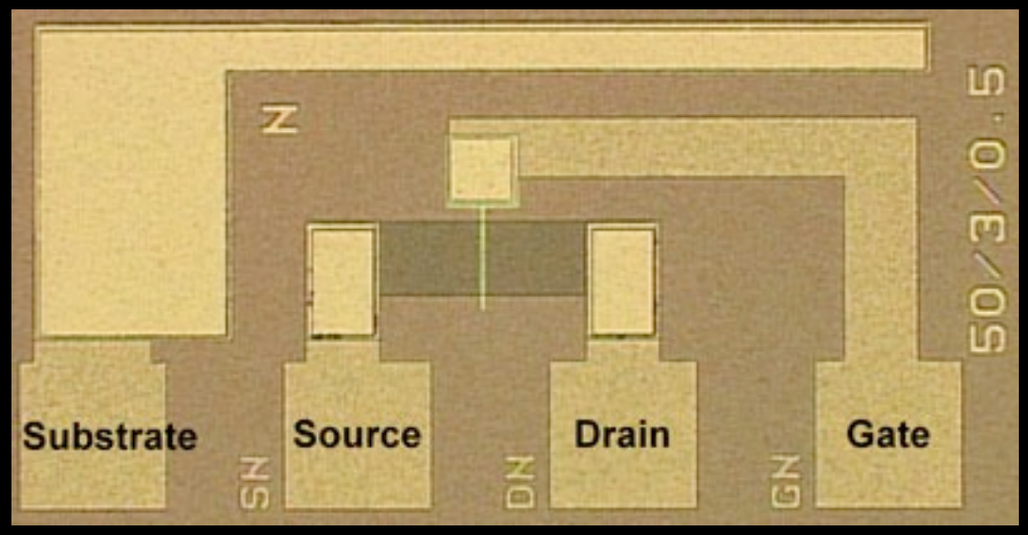

NAND: Hard It Works

TOSHIBA TC58DVM92A5TA00

BLOCK DIAGRAM

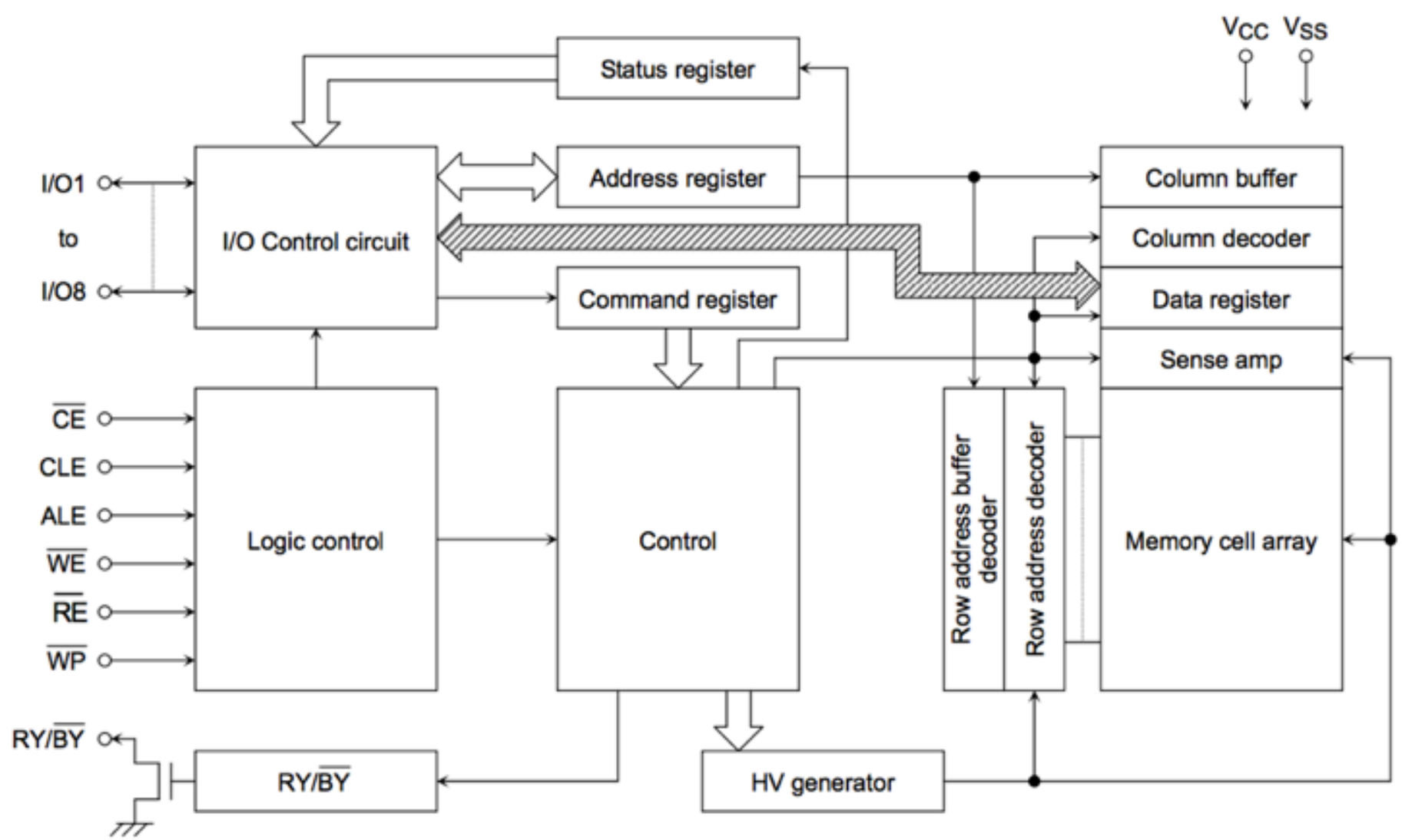

NAND: Hard It Works

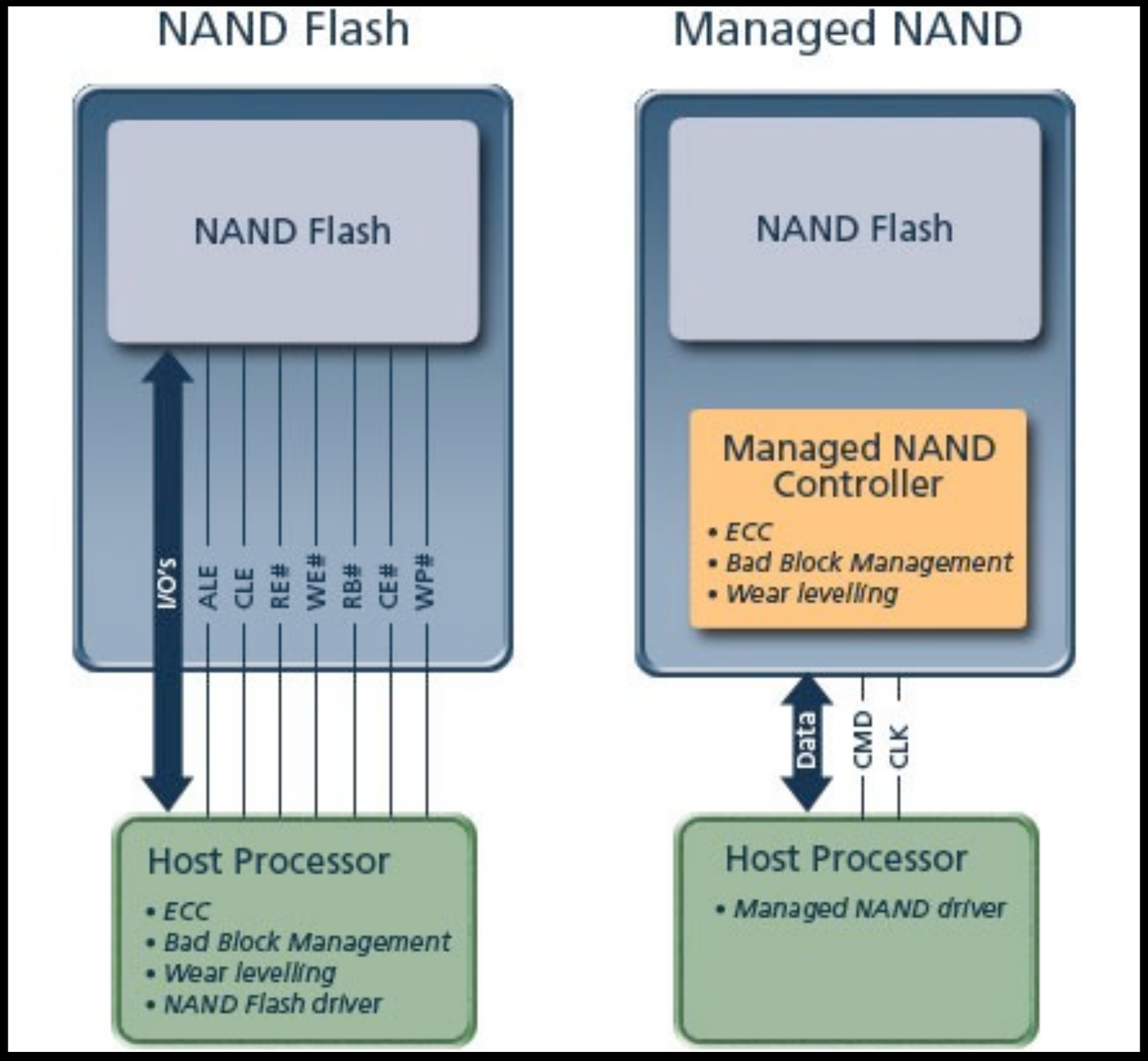

NAND: Hard It Works

- When Bits go Bad:
  - BBT / OOB / ECC?

TIL: Notes from the Research

- Some systems fully manage the BBT in kernel memory (this is written back to disk as the "master" during reboot), so you wouldn't even have to muck with the hardware
- Some systems use dual-page OOB markers for BBT & ECC (Sony!)
- Some systems use 1st or last block for the entire BBT & ECC (think of it as address -10)

NAND: Soft It Works

- RAW NAND vs. MMC/eMMC
  - Complex Driver v. Simple Driver
- Proprietary (closed) wear leveling algorithms are normally embedded
- Still needs to interact with the kernel & the file system code (We can haz API!)

NAND: Soft It Works

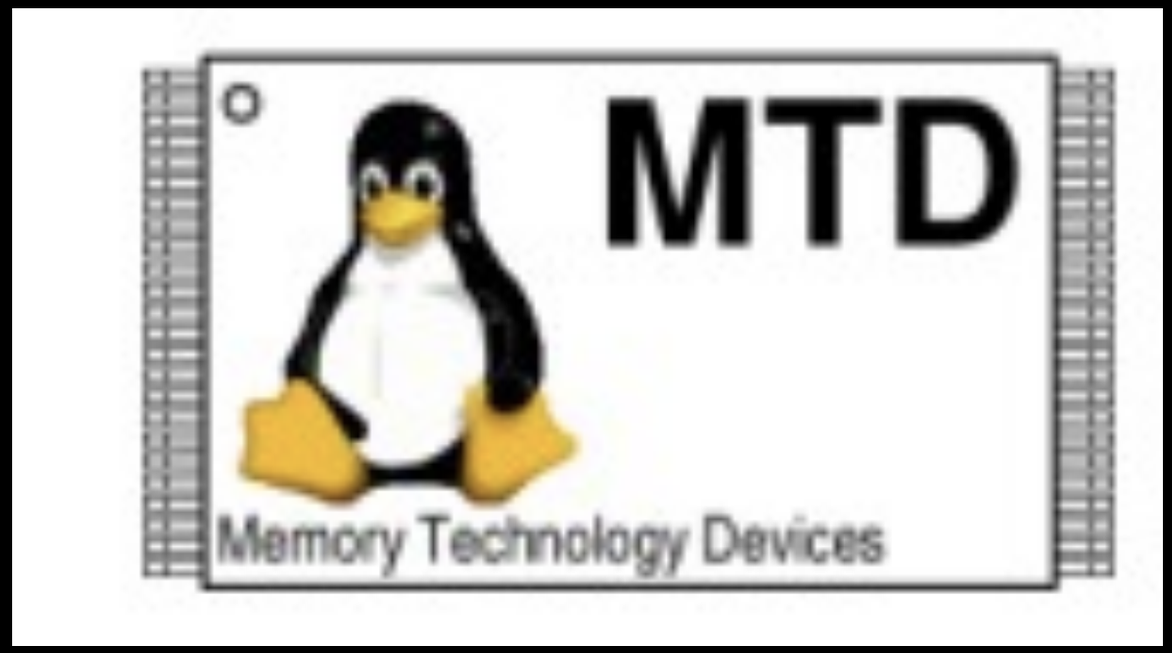

- MTD Subsystem
- Kind of a meta-driver
- Used heavily for boot partitions on Android

Options For Optimal Breakage

- YAFFS and other File Systems
- MTD at the Driver Level
- Android / Linux Kernel
- Flash Transition Layers and Reverse the Embedded Controllers

- Please don’t re-de-invent the wheel, hit me up first!

What I expected.

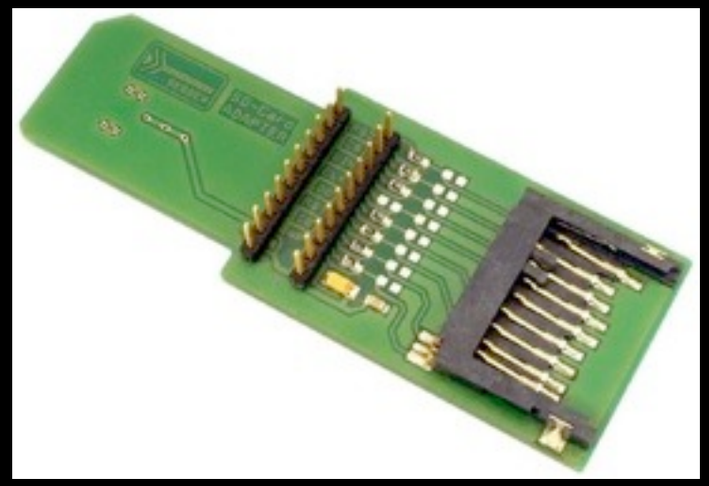

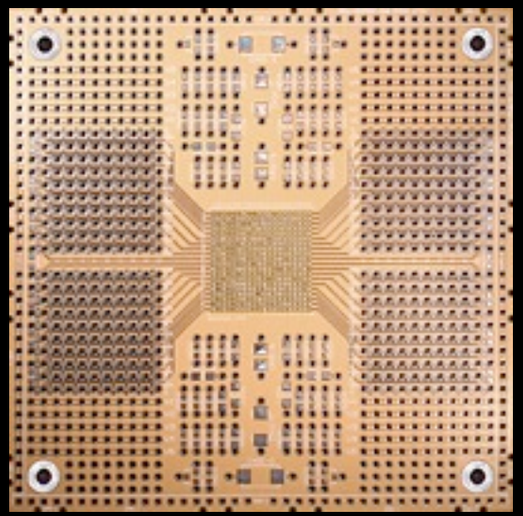

Lets Go Shopping
(thx JDuck)

Visual Palette Cleanse

My Path, And You Can Too!

```
$ cat /proc/partitions
major minor  #blocks  name

  31        0     409600 mtdblock0
  31        1       6144 mtdblock1
  31        2     103936 mtdblock2
  31        3     430080 mtdblock3
 179        0    7778304 mmcblk0
 179        1    7777280 mmcblk0p1
```

```
$ cat /proc/mtd
dev:    size   erasesize  name
mtd0: 19000000 00020000 "system"
mtd1: 00600000 00020000 "appslog"
mtd2: 06580000 00020000 "cache"
mtd3: 1a400000 00020000 "userdata"
```

My Path, And You Can Too!

- Kernel Modules: Side Loading Fun!
- Sure, I'll be a "test" case

```
<base kernel source>/kernel/drivers/mtd/tests/
```

```
obj-$(CONFIG_MTD_TESTS) += nandx_find_simple.o
obj-$(CONFIG_MTD_TESTS) += nandx_find_complex.o
obj-$(CONFIG_MTD_TESTS) += nandx_hide.o
obj-$(CONFIG_MTD_TESTS) += mtd_oobtest.o
obj-$(CONFIG_MTD_TESTS) += mtd_pagetest.o
obj-$(CONFIG_MTD_TESTS) += mtd_readtest.o
obj-$(CONFIG_MTD_TESTS) += mtd_speedtest.o
obj-$(CONFIG_MTD_TESTS) += mtd_stresstest.o
obj-$(CONFIG_MTD_TESTS) += mtd_subpagetest.o
obj-$(CONFIG_MTD_TESTS) += mtd_torturetest.o
obj-$(CONFIG_MTD_TESTS) += mtd_erasepart.o
```

My Path, And You Can Too!

- Almost everything I do is simply calling the API in the wrong order
  - The 1 exception is the OOB write
- Path to Winning?
  - Pick a block and wipe it
  - Cover the entire block in 0xDEADBEEF
  - Mark the Block as "Bad"
    - 0x00 out the OOB in the case of Sony
    - Watch the reboot from collision!

nandx_hide.c

```
7530 ▶  /*⋯ */
7539    static void nandx_file_injector(int blockLocation, void *bufferToWrite)
7540 ▼  {
7541 ▶    /*⋯ */
7554
7555      //TODO: Grab and check return values here!!!!
7556
7557 ▶    /*⋯ */
7564
7565      int err = 0;
7566
7567      //Moves all data out of the target block (no, it really doesn't)
7568      nandx_move_data_from_block( blockLocation );
7569
7570      //Erases the targeted block
7571      nandx_erase_block( blockLocation );
7572
7573      //Injects our buffer directly into the block
7574      nandx_buffer_write_to_block( blockLocation, bufferToWrite );
7575
7576      //Marks the target block as bad
7577      err = nandx_mark_bad_framework( blockLocation );
7578 ▼    if( !err ){
7579        printk(PRINT_PREF "First attempt at marking %d bad failed, going manual\n",
...   blockLocation);
7580        err = nandx_mark_bad_manual( blockLocation );
7581 ⌙    }
7582
7583 ⌙  }
```

nandx_hide.c

```
7138 ▶  /*⋯ */
7147    static int nandx_mark_bad_framework(int blockLocation)
7148 ▼  {
7149 ▶    /*⋯ */
7168      int ret;
7169      loff_t addr = blockLocation * mtd->erasesize;
7170
7171      printk(PRINT_PREF "Marking the block %d as BAD\n", blockLocation);
7172
7173      ret = mtd->block_markbad(mtd, addr);
7174      if (ret)
7175        printk(PRINT_PREF "Success - block %d has been marked bad\n", blockLocation);
7176      else
7177        printk(PRINT_PREF "Failure - Why U no mark block %d as bad?\n", blockLocation);
7178
7179      return ret;
7180
7181    }
```

nandx_hide.c

```
7183 ▶  /*[...] */
7193    static int nandx_mark_bad_manual(int blockLocation)
7194 ▼  {
7195 ▶    /*[...] */
7219
7220      int ret;
7221      loff_t ofs = blockLocation * mtd->erasesize;
7222
7223      // THIS CALL IS THE ENTIRE MAGIC OF NANDX-HIDE
7224      ret = msm_nand_block_markbad(mtd, ofs);
7225
7226      if(ret)
7227        printk(PRINT_PREF "We call into the driver and make %d go away.\n", blockLocation);
7228      else
7229        printk(PRINT_PREF "Odd.. even a RAW write on the OOB doesn't kill block: %d\n",
...   blockLocation);
7230      return ret;
7231 ►  }
```

My Path, And You Can Too!

<Live Demo> AND/OR <Canned Video>

http://youtu.be/AE_oUkKKaBY

My Path, And You Can Too!

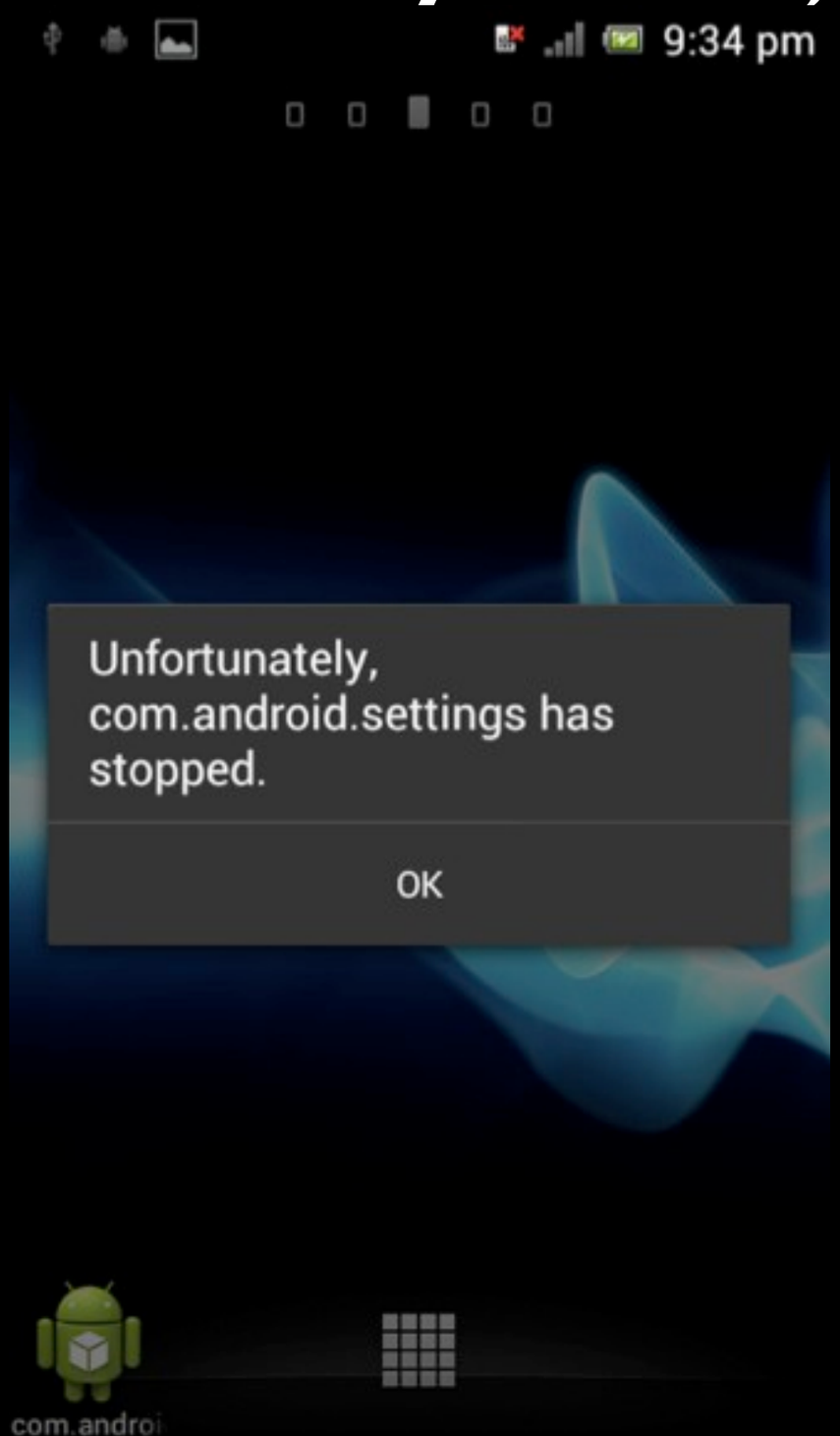

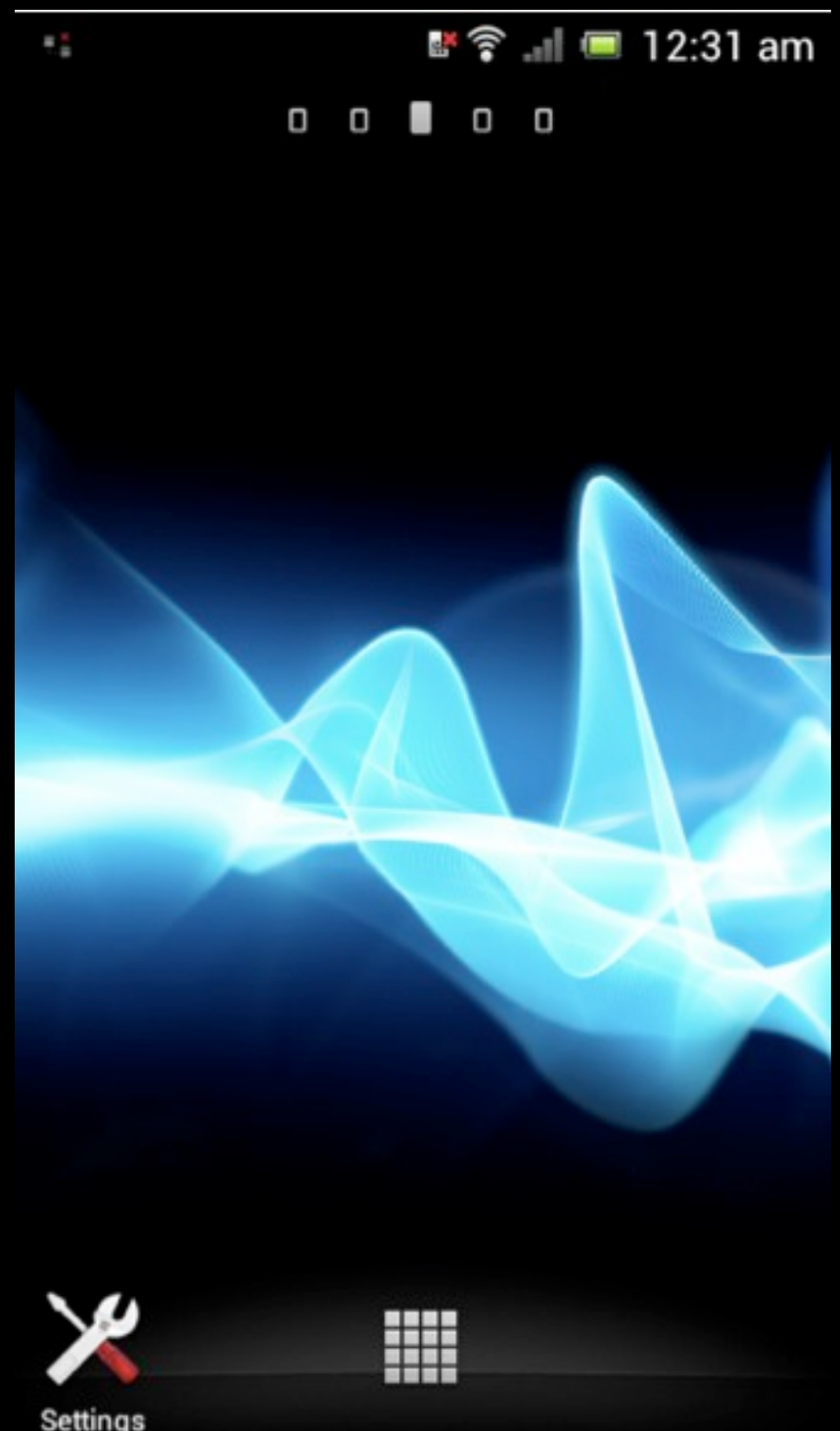

My Path, And You Can Too!

```
<6>[19359.863098]
<6>[19359.863098] ==================================================
<6>[19359.863098] nandx_find_simple: NANDX Find for MTD device: 0
<6>[19359.863128] nandx_find_simple: MTD device
<6>[19359.863128]   size 419430400
<6>[19359.863128]   eraseblock size 131072
<6>[19359.863128]   page size 2048
<6>[19359.863128]   count of eraseblocks 3200
<6>[19359.863128]   pages per eraseblock 64
<6>[19359.863128]   OOB size 64
<6>[19359.863128]
<6>[19360.065277] nandx_find_simple: scanned 3200 eraseblocks, 1 are bad
<6>[19360.065277] ==================================================
<6>[19360.065277] nandx_find_simple: MTD block MAP for device: 0
<6>[19360.065307] nandx_find_simple: block 37 is BAD
<6>[19360.065307]
<6>[19360.065307] ==================================================
<6>[19360.065338] ==================================================
```

```
<6>[  109.000213] ==================================================
<6>[  109.000274] nandx_find_complex: NANDX Find for MTD device: 0
<6>[  109.000335] nandx_find_complex: MTD device
<6>[  109.000335]   size 419430400
<6>[  109.000366]   eraseblock size 131072
<6>[  109.000366]   page size 2048
<6>[  109.000396]   count of eraseblocks 3200
<6>[  109.000396]   pages per eraseblock 64
<6>[  109.000427]   OOB size 64
<6>[  109.000427]
<6>[  109.246246] nandx_find_complex: =====
<6>[  109.246246] dumping eraseblock 37
<6>[  109.246246] =====
<2>[  109.246276] 00000:
00000000000000000000000000000000000000000000000000000000000000
<2>[  109.246276] 00020:
00000000000000000000000000000000000000000000000000000000000000
...
...
<2>[  109.247344] 007c0:
00000000000000000000000000000000000000000000000000000000000000
<2>[  109.247375] 007e0:
00000000000000000000000000000000000000000000000000000000000000
<2>[  109.247406] 00800:
deadbeefdeadbeefdeadbeefdeadbeefdeadbeefdeadbeefdeadbeefdeadbeef

<2>[  109.247406] 00820:
deadbeefdeadbeefdeadbeefdeadbeefdeadbeefdeadbeefdeadbeefdeadbeef
...
...
<2>[  109.371795] 1f8a0:
deadbeefdeadbeefdeadbeefdeadbeefdeadbeefdeadbeefdeadbeefdeadbeef
<2>[  109.371795] 1f8c0:
deadbeefdeadbeefdeadbeefdeadbeefdeadbeefdeadbeefdeadbeefdeadbeef
...
...
```

My Path, And You Can Too!

- Once the block is bad, it's bad (unless you are me?)
- Flashing a new ROM doesn't reclaim it
- Factory Reset doesn't reclaim it
- 0xDEADBEEF is still there, just kickin' it

- If you are hungry you can just start eating 512kb blocks, one reboot at a time

My Path, And You Can Too!

- We own it & it is hidden but...
- ECC stops running once we manipulate the BBT / OOB
- We can still manually run it from the MTD system

Un-Break It With Forensics?

- Start looking @ the Bad Blocks as well?
- Closed vendor secret wear leveling algorithms
- Interleave FTW

I Can All The Things

- "JT Just Went Full Oppenheimer" - Shawn Moyer
  - I wanted to hide things in cell phones...
  - but... embedded systems?
  - You could hide, or just start breaking things in place...

Defensive Posture Revisited

- Education (Thanks for listening)
- TL; DR:
  - This is elemental hardware design, there is no “fix”
  - Best bet until we get new tools?
    - Post Analysis, Logs and Forensics
    - Attempt to force 0xFF on every bad block @ boot?
  - Consider not using NAND?
    - Doubtful if you want to embed...

I'm Bored, Lets Break things

- Kill data in place, wait for IT to wipe and trash the drive, physical exfil FTW

Break Responsibly & Be Cool

- @m0nk_dot
- jthomas@accuvant.com
- https://github.com/monk-dot/NandX