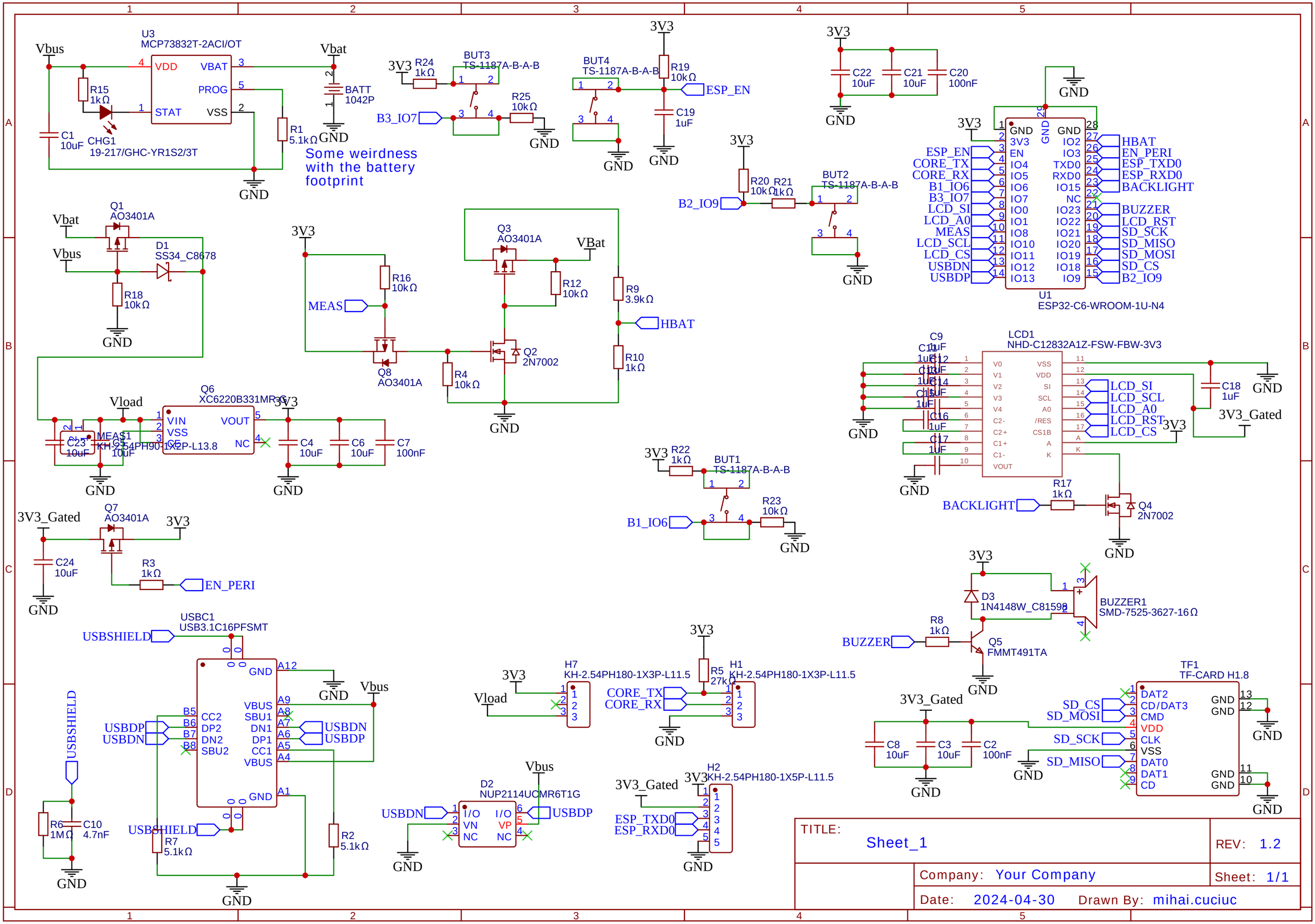

TITLE: Sheet_1	REV: 1.2
Company: Your Company	Sheet: 1/1
Date: 2024-04-30 Drawn By: mihai.cuciuc	