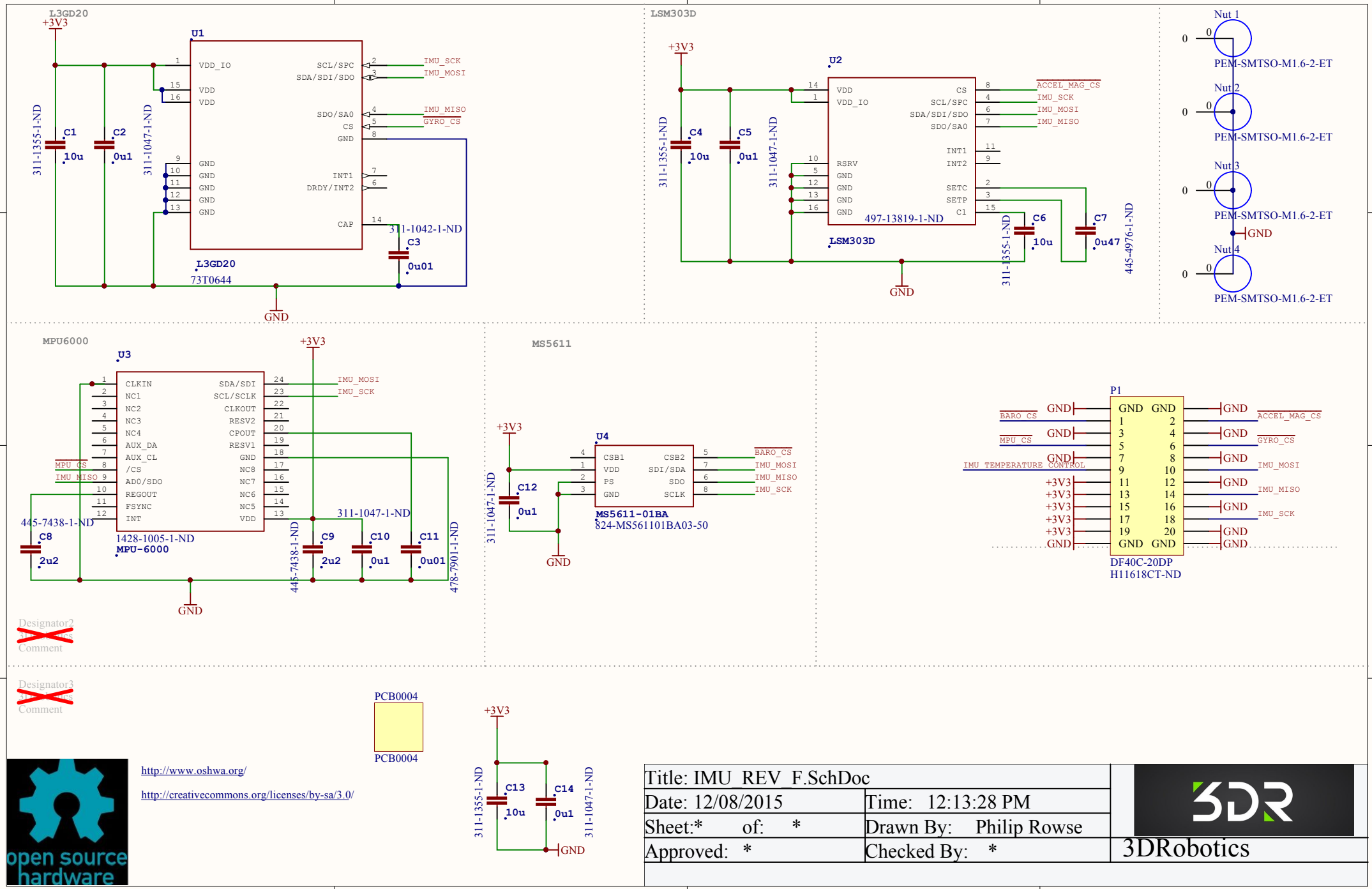
L3GD20
+3V3
U1
VDD_IO
VDD
VDD
GND
GND
GND
GND
GND
SCL/SPC
SDA/SDI/SDO
SDO/SA0
CS
GND
INT1
DRDY/INT2
CAP
IMU_SCK
IMU_MOSI
IMU_MISO
GYRO_CS
311-1355-1-ND
C1
10u
C2
0u1
311-1047-1-ND
311-1042-1-ND
C3
0u01
L3GD20
73T0644
GND
LSM303D
+3V3
U2
VDD
VDD_IO
RSRV
GND
GND
GND
GND
CS
SCL/SPC
SDA/SDI/SDO
SDO/SA0
INT1
INT2
SETC
SETP
C1
ACCEL_MAG_CS
IMU_SCK
IMU_MOSI
IMU_MISO
311-1355-1-ND
C4
10u
C5
0u1
311-1047-1-ND
497-13819-1-ND
LSM303D
C6
10u
C7
0u47
445-4976-1-ND
GND
Nut 1
Nut 2
Nut 3
Nut 4
PEM-SMTSO-M1.6-2-ET
GND
MPU6000
U3
+3V3
CLKIN
NC1
NC2
NC3
NC4
AUX_DA
AUX_CL
/CS
AD0/SDO
REGOUT
FSYNC
INT
SDA/SDI
SCL/SCLK
CLKOUT
RESV2
CPOUT
RESV1
GND
NC8
NC7
NC6
NC5
VDD
IMU_MOSI
IMU_SCK
MPU_CS
IMU_MISO
445-7438-1-ND
C8
2u2
1428-1005-1-ND
MPU-6000
445-7438-1-ND
C9
2u2
311-1047-1-ND
C10
0u1
C11
0u01
478-7901-1-ND
GND
Designator2
Comment
MS5611
+3V3
U4
CSB1
VDD
PS
GND
CSB2
SDI/SDA
SDO
SCLK
BARO_CS
IMU_MOSI
IMU_MISO
IMU_SCK
311-1047-1-ND
C12
0u1
MS5611-01BA
824-MS561101BA03-50
GND
P1
GND
BARO_CS
MPU_CS
IMU_TEMPERATURE CONTROL
+3V3
ACCEL_MAG_CS
GYRO_CS
IMU_MOSI
IMU_MISO
IMU_SCK
DF40C-20DP
H11618CT-ND
Designator3
Comment
PCB0004
PCB0004
+3V3
311-1355-1-ND
C13
10u
C14
0u1
311-1047-1-ND
GND
http://www.oshwa.org/
http://creativecommons.org/licenses/by-sa/3.0/
open source hardware
Title: IMU_REV_F.SchDoc
Date: 12/08/2015
Time: 12:13:28 PM
Sheet:* of: *
Drawn By: Philip Rowse
Approved: *
Checked By: *
3DR
3DRobotics