# Advanced Telemedicine System For Remote Supervision

# EC492 B.Tech: Project

*Submitted By*


| | |
|---|---|
| **Basima K** | **PKD16EC016** |
| **Elga G Jose** | **PKD16EC023** |
| **Silpa S** | **PKD16EC048** |
| **Sruthy M** | **WYD16EC115** |

*under the guidance of*

**Dr.Mohanan K P**

*Associate Professor and HOD, Dept.of Electronics and Communication Engineering*

**DEPARTMENT OF ELECTRONICS AND COMMUNICATION ENGINEERING**

**GOVERNMENT ENGINEERING COLLEGE SREEKRISHNAPURAM**

**PALAKKAD- 678633**


**May 2023**

# CERTIFICATE

**PROJECT REPORT**

*This is to certify that this Project report entitled* ***Advanced Telemedicine System For Remote Supervision*** *submitted by*
***Basima K***, ***Elga G Jose***, ***Silpa S***, ***Sruthy M*** *to the Department of Electronics and communication Engineering, Government Engineering College, Sreekrishnapuram, Palakkad in partial fulfillment of the requirement for the award of B.Tech Degree in Electronics and Communication is a bonafide record of the work carried out by them.*

| | | |
|---|---|---|
| Dr.Mohanan K P | Prof. Shamla B | Dr.Mohanan K P |
| **Guide** | **Co-ordinator** | **Head of the Department** |

Place: Sreekrishnapuram

Date:

# ACKNOWLEDGEMENT

First and foremost we wish to express our wholehearted indebtedness to God Almighty for the gracious constant care and blessings showered over us for the successful completion of the project.

We are extremely grateful to Prof.Dr Mohanan K P, our Guide and Head of Department of Electronics and Communication Engineering, Government Engineering College Sreekrishnapuram, for his sincere guidance, inspiration and support throughout the project.

We are thankful to Prof.Shamla B, Seminar Co-ordinator ,Department of Electronics and communication Engineering, Government Engineering College Sreekrishnapuram, for her support and inspiration through out the project.

Our gratitude is extended to all teaching and non teaching staff of Department of Electronics and Communication Engineering, Government Engineering College Sreekrishnapuram for the sincere directions imparted and the cooperation in connection with the project.

We are also thankful to our parents for the support given in connection with the project. Gratitude is extended to all well-wishers and our friends who supported us to complete the project in time.

# ABSTRACT

In today's world of automation, biomedical aspect of engineering is fast picking up. Biomedical electronics has benefited greatly due to advancements in engineering. It has made doctors more efficient and brought fast pace to delivery of service. Doctors are hence aided by the patient monitoring systems for supervision of patients. The presented system uses the invention in the field of electronics, a telemetric system based on Internet of Things (IoT) which can be used to track bed-ridden patients. It provides a device which can be used to monitor the patients health. It will also help family members to continuously monitor patient's health. It would act as a virtual nurse by constantly updating information on cloud server. It provides information regarding vital parameters of patients. Similar to systems used in hospital, this same system can be used by anyone, even those not under observation, to keep track of their vital signs with the use of sensors. In this project, if sensor's output starts fluctuating above normal rate, then an emergency message would be sent to a doctors/family members phone. Also it updates the same on a cloud platform. The Internet of Things (IoT) concepts have been widely used to interconnect the available medical resources and offer smart, reliable, and effective healthcare service to the patients. Health monitoring for active and assisted living is one of the paradigms that can use the IoT advantages to improve the patient's lifestyle. This project presents an IoT architecture customized for healthcare applications. The aim of the project was to come up with a remote health monitoring system that can be made with locally available sensors with a view to making it affordable if it were to be mass produced. Hence the proposed architecture collects the sensor data and relays it to the cloud where it is analyzed for remote viewing. Feedback actions based on the analyzed data can be sent back to the doctor or guardian through SMS alerts in case of any emergencies.

# Contents

**ACKNOWLEDGEMENT** **i**

**ABSTRACT** **ii**

**LIST OF FIGURES** **v**

**1 INTRODUCTION** **1**

**2 LITERATURE SURVEY** **4**

**3 SYSTEM CHARACTERISTICS** **7**

3.1 Goals . . . . . 7

3.2 Objectives . . . . . 7

3.3 User Characteristics . . . . . 8

3.4 Requirements . . . . . 8

3.4.1 Hardware Requirements . . . . . 8

3.4.2 Software Requirements . . . . . 8

3.5 Benefits . . . . . 8

**4 SYSTEM OVERVIEW** **10**

4.1 Block Diagram . . . . . 10

4.2 Hardware Description . . . . . 11

4.3 Hardware Interfaces . . . . . 19

**5 SYSTEM IMPLEMENTATION 23**

5.1 Arduino IDE Software . . . . . 23

5.2 ThingSpeak . . . . . 24

**6 METHODOLOGY 27**

6.1 Detailed Circuit Diagram and Working . . . . . 27

**7 RESULTS AND DISCUSSIONS 30**

**8 CONCLUSION AND FUTURE SCOPE 34**

**BIBLIOGRAPHY 36**

**9 APPENDIX 39**

9.1 Software . . . . . 39

# List of Figures

4.1 Block Diagram . . . . . 10
4.2 LM35 . . . . . 11
4.3 MAX30100 . . . . . 12
4.4 Sunrom blood pressure sensor with serial output . . . . . 13
4.5 NodeMCU ESP8266 Wifi Module . . . . . 15
4.6 XL6009 DC-DC Power Supply Module . . . . . 16
4.7 SIM900A . . . . . 16
4.8 AC Adapter . . . . . 17
4.9 LM35 interfacing with NodeMCU . . . . . 19
4.10 MAX30100 interface with NodeMCU . . . . . 19
4.11 SIM900A interface with NodeMCU . . . . . 20
4.12 Blood pressure sensor interface with NodeMCU . . . . . 22

5.1 Code compiled in Arduino . . . . . 23
5.2 Created a channel 'TELEMEDICINE' . . . . . 25
5.3 Channel settings . . . . . 25

6.1 Circuit Diagram . . . . . 29

7.1 Field 1: Pulse rate measurement . . . . . 31
7.2 Field 2:Percentage of oxygen in blood . . . . . 32
7.3 Field 3:Temperature measurement . . . . . 32
7.4 Field 4: Blood pressure measurement . . . . . 33
7.5 Message sent through GSM . . . . . 33

# Chapter 1

# INTRODUCTION

Information and communication technologies (ICTs) have great potential to address some of the challenges faced by both developed and developing countries in providing accessible, cost-effective, high-quality health care services. Telemedicine uses ICTs to overcome geographical barriers, and increase access to health care services. This is particularly beneficial for rural and underserved communities in developing countries – groups that traditionally suffer from lack of access to health care. In light of this potential, the World Health Organization (WHO) established the Global Observatory for eHealth (GOe) to review the benefits that ICTs can bring to health care and patients well-being. The Observatory is charged with determining the status of eHealth solutions, including telemedicine, at the national, regional, and global level, and providing WHO's member states with reliable information and guidance on best practices, policies, and standards in eHealth. Telemedicine, a term coined in the 1970s, which literally means "healing at a distance" , signifies the use of ICT to improve patient outcomes by increasing access to care and medical information. Recognizing that there is no one definitive definition of telemedicine – a 2007 study found 104 peer-reviewed definitions of the word. The World Health Organization has adopted the following broad description: "The delivery of health care services, where distance is a critical factor, by all health care professionals using information and communication technologies for the exchange of valid information for diagnosis, treatment and prevention of disease and injuries, research and evaluation, and for the continuing education of health care providers, all in the interests of advancing the health of individuals and their communities".

Telemedicine is a rapidly expanding area within medical informatics. Broad opportunities exist here for applying electrical or computer technical skills to medicine and healthcare. It uses computer and communication technologies to provide medical expertise and services to distant locations, telemedicine dates back to the 1920s. Then radio linked public health physicians standing watch at shore stations to ships at sea with medical emergencies. Much later, the large-scale demonstrations involving the ATS-6 satellite projects took place; wherein, paramedics in

remote Alaskan and Canadian villages were linked with hospitals in distant towns or cities. However, certain obstacles are preventing the widespread use of clinical telemedicine. This is according to the report, Guide to Assessing Telecommunications in Health Care, by the Institute of Medicine of the National Academy of Science. One obstacle is the inability to develop technical systems (both hardware and software) that do three things well. One, the components operate predictably and smoothly together. Two, the systems work in different settings without extensive adaptation. Three, the systems are built from easily replaceable components. Technical systems also may be poorly adapted to the human infrastructure of health care. The systems do not fit the work environment, needs and preferences of clinicians, patients, and other decision-makers. Due to the recent advances in cellular telecommunication networks, different systems offering telemedicine evolved over the past years [3]. The Trans-European Network-Home-Care Management System (TEN-HMS) study was one of the first international studies pointing out the advantages of using complementary telemedical systems alongside the usual treatment of patients with chronic heart failure [4], [5].

The aim of this project is to design an appropriate patient health monitoring system. The proposed system will be helpful in assisting the doctor about the health condition of an unconscious or paralysed patient and alerting the doctor whenever care is required. This system will assist the doctor by sending an SMS message about the health condition of the patient, when the set of vital signals recorded are out of the normal range[6]. The system is also beneficial to relatives or guardians that are taking care of the patient since all the parameters results are displayed on the website.The patient's family can check the vital parameters online without needing to depend on the doctor at all times. The system consists of various sensors such as LM35 sensor for measuring temperature, Sunrom blood pressure sensor for measuring blood pressure, MAX30100 sensor for measuring pulse rate and oxygen saturation in blood. A GUI should be developed for live monitoring of vital parameters of the patient like pulse rate,percentage of oxygen in blood,temperature and blood pressure.The system should be able to test, implement and establish communication between the different sensors and NodeMCU, and send an SMS alert message to the doctor in case of emergency via GSM. Also, the condition of the patient should be monitored online and the data must be stored on cloud.

Serious diseases could be prevented by early detection of abnormalities in vital parameters such as heartbeat rate, pressure etc. The vital parameters are determined and these measured range of parameters should be compatible with the normal rate to ensure the patient is healthy. The technology of Global System for Mobile Communication (GSM) is used in case if any

abnormality is detected in the parameters. In this work, we made use of sensors for measuring heart rate, blood pressure, temperature and oxygen saturation in blood and monitoring system based on WiFi network. An Analog to Digital Converter (ADC) is used to convert the readings into readable form. GSM module is then used to send immediate and quick feedback to doctor or family member. This system can also be used by people who are not under the continuous observation of a doctor. The main motivation behind this project is to reduce the number of patients visiting hospitals. Since hospitals nowadays are filled to the brim with patients, the medical infrastructure is stressed to the limit of breakdown and the field of electronics can be used to bring about some respite in this field. Also, the poor and needy people would greatly benefit from this and the bed ridden patients would be given respite from constant hospital visits.

# Chapter 2

# LITERATURE SURVEY

According to the statistics provided by WHO , half of the world's 7.3 billion people cannot access essential health services. By the year 2030, the world is estimated to be short on 18 million health workers, so it is important to propose health monitoring systems. Remote patient monitoring (RPM) of physiological measurements offers the potential to provide high quality care to elderly, chronically and acutely ill people in their home environment, while making effective use of healthcare resources.

**1.A Smart, Low Cost, Wearable Technology for Remote Patient Monitoring. 2019 IEEE Global Conference on Internet of Things (GCIoT). DOI:10.1109/gciot47977.2019.9058401 Babar, E. T. R., Usmani, A. A., Kayani, A., Yaqub, A., Rehman, M. U.** [22]

Medical errors are one of the major causes of preventable deaths globally.The common causes of this error are miscommunication of information and delay in treatment because of a delay in transmission of clinical information to the doctors.This delay is mainly because of the manual nature of current practices and large patient to nurse ratio.The neonatology department faces major issues in this regard as ill and/or premature new-born infants require constant monitoring to ensure the levels of certain parameters (vital signs) remain within a particular range in order to avoid life threatening or organ damaging situations.To address this issue,an automated system to continuously measure three important vital signs (e.g. temperature, pulse rate, and pulse oxygen concentration) and to automatically indicate clinically significant situations is presented here.This system measures three vital signs using wearable sensors and communicates the data using wireless network with an accuracy of 0.1 degree Centigrade temperature, 0.1 percent oxygen saturation and 0.2 beats per minute pulse rate. An alarm is generated if parameters are out of the safe range. The autonomous and low cost system can successfully aide hospital staff, eliminate risks of human error in the emergency communication system. One of the main errors which occur frequently are therapeutic errors.Therapeutic error means the delay in initiating medication and inadequate monitoring of vital signs and these errors can be avoided by taking proper corrective measures.

**2 IoT based Telemedicine System Mr. Ojas Sonnis, Mr. Akshay Sunka, Mr. Rohitkumar Singh, Mr.Trupti Agarkar IEEE International Conference on Power, Control, Signals and Instrumentation Engineering (ICPCSI-2017)[23]**

This paper presents the way for reading heart rate of the patient. An LED display is used to show the reading of the sensor. The technology of Global System for Mobile Communication (GSM) is used in case if any abnormality is detected in the heart rate. The proposed innovation will be programmed to automatically detect about their health conditions. In this work, it made use of sensors for measuring heart beat rate with WiFi network. An Analog to Digital Converter (ADC) is used to convert the readings into readable form.

**3 Arduino UNO and GSM Based Wireless Health Monitoring System for Patients Pratiksha W. Digarse, Sanjaykumar L.Patil . International Conference on Intelligent Computing and Control Systems ICICCS 2017[6]**

The framework considerably encompasses the segments like pulse rate sensor, temperature sensor, saline level sensor, Arduino Uno (ATmega328P) and GSM modem. GSM (Global System for Mobile Communication) sends an SMS to the doctor's mobile in critical conditions. This GSM module has an RS232 interface for serial communication having exterior peripheral. The HyperTerminal is a Windows application. Alert SMS are sending via. GSM network which works via. AT commands. The coded results are received at the microcontroller; then it gets retransmitted at the HyperTerminal through controller. The microcontroller is pre-programmed for receiving and transmitting data which has a baud rate of 9600.

**4 IoT based Smart Remote Health Monitoring System. 2020 International Conference on Electrical and Electronics Engineering (ICE3) 2020.Verma, P., Mishra, R. DOI:10.1109/ice348803.2020.9122864[25]**

An IoT based healthcare system to ensure better well-being of patients and condition of life especially in remote areas where there is no healthcare system. In this paper, the vital signs of health like body temperature and pulse rate are measured using the sensors like LM35 and MAX30100, the measured data is send over to the IOT cloud to get recorded history of the patient. The proposed model is noninvasive in nature and can monitor the patient in remote area through sensor connected networks. The principle aim of this model is to provide healthcare facilities in rural areas. In the first stage, the sensor collect the data from the patient for the

further monitoring. In the data acquisition stage, the collected data, which is in analog form is combined and converted into digital form. In short data acquisition perform integration and conversion of data. The next stage is processing of data and the main purpose of this stage is to provide meaningful data by converting the raw data. In storage of data stage, the transmission of data to cloud is done through Wi-Fi module using MQTT protocol. The processed data is stored over the cloud and in the last stage the transmission of data is performed.

Most of these systems are utilised for measuring the vital parameters and reducing the workload of health workers. However,majority of the systems are capable of measuring only three parameters. Also, the systems which provide simultaneous access to the doctor and relatives are not common. .

# Chapter 3

# SYSTEM CHARACTERISTICS

## 3.1 Goals

- Make health care accessible to people who live in rural or isolated communities.
- Make services more readily available or convenient for people with limited mobility, time or transportation options.
- Provide access to medical specialists.
- Improve communication and coordination of care among members of a health care team and a patient.
- Provide support for self-management of health care.

## 3.2 Objectives

- Improving patient outcomes.
- Increasing patient engagement and satisfaction.
- Improving patient convenience.
- Providing remote and rural patients with access to care.
- Improving leverage of limited physician resources.
- Reducing cost of care delivery.
- Reducing hospital re-admissions.
- Improving specialist efficiency.
- Providing access to new specialties.
- Providing 24/7 access to specialists.

## 3.3 User Characteristics

The main objective of this project is to build up a reliable telemedicine system with improved communication and coordination of care among members of a health care team and a patient.This project benefits bedridden patients who are unable to visit hospitals frequently for check-up.

## 3.4 Requirements

### 3.4.1 Hardware Requirements

- LM35 Temperature Sensor
- Sunrom Blood Pressure Sensor
- MAX30100 Pulse Oximeter Sensor
- AC Adapter
- XL6009 DC-DC Step-up Power Supply Module
- Node MCU ESP8266
- SIM900A GSM Module
- PCB
- Power supply

### 3.4.2 Software Requirements

- C programming usingArduino IDE Software.
- ThingSpeak platform for viewing the results.

## 3.5 Benefits

- Improved access: Telemedicine can provide access to healthcare in previously unserved or underserved areas.

- Improved quality of care: Telemedicine provides enhanced decision making through heretofore impractical collaborative efforts. These take place when the referring physician, the consulting physician, the patient and the patient's family meet together through interactive video. With telemedicine, patient visits to referring and consulting physicians can occur simultaneously, providing the synergy derived from a healthcare "team" approach.

- Reduced isolation: Telemedicine has been shown to reduce professional isolation by providing peer and specialist contact for patient consultations and continuing education.

- Reduced costs: Current expansion in telemedicine may be attributed in part to the movement to contain costs in healthcare. One of the most obvious cost reductions is the decreased necessity for travel. This includes the travel expenditures for consultants traveling to remote sites and patients to distant consultants and or transfers to other facilities.

# Chapter 4

# SYSTEM OVERVIEW

## 4.1 Block Diagram

Patient monitoring is one of the major concerns in the health care industry. The telemedicine is one which would be interesting to everyone because of its amazing factors. Multiple jobs can be done by a single health application with user's intervention. The system has been designed to take several inputs to measure physiological parameters of human such as temperature, heart rate and blood pressure. NodeMCU is connected to the sensors, namely LM35 temperature sensor,MAX30100 pulse oximeter and blood pressure sensor.

The project is divided into two parts. First is the hardware design and second is the software design. The sensor output is amplified,filtered and passed to analog ADC pin of ESP8266 NodeMCU module. After processing of data, NodeMCU pushes data to the ThinkSpeak server via the MQTT protocol and an alert message will send to the smartphone with the help of GSM module if the values deviate from the normal range.

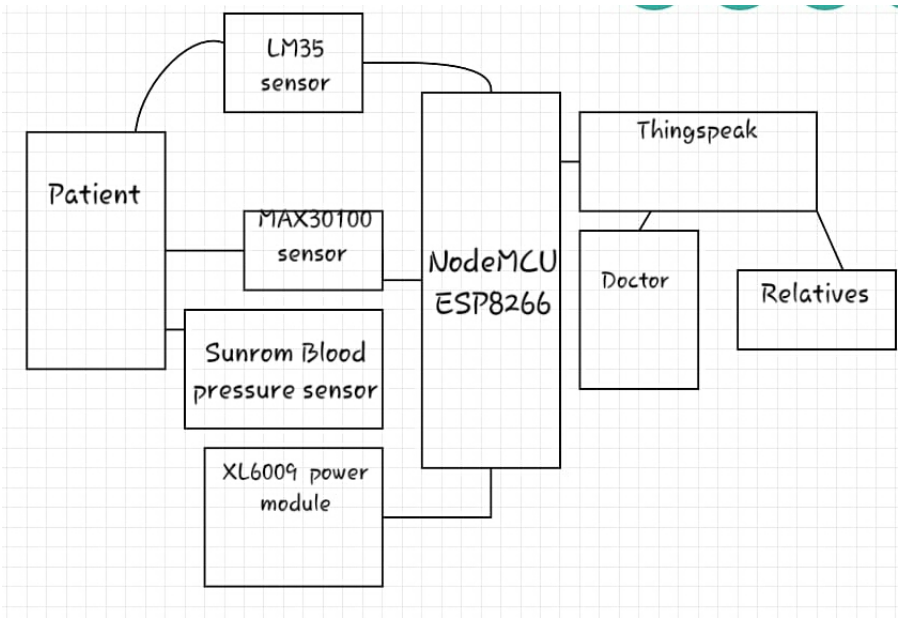


**Figure 4.1:** Block Diagram

## 4.2 Hardware Description

### LM35 Temperature Sensor

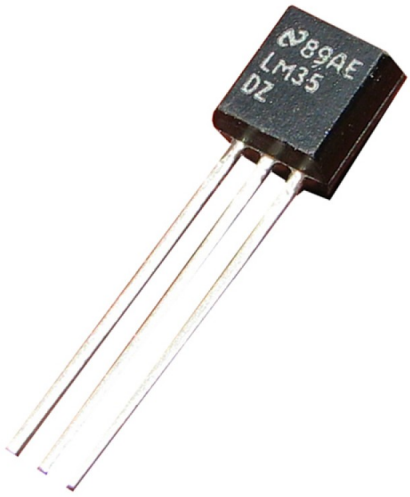


**Figure 4.2:** LM35

The LM35 series are precision integrated-circuit temperature sensors, whose output voltage is linearly proportional to the Celsius (Centigrade) temperature. It is a small and cheap IC which can be used to measure temperature anywhere between -55C to 150C. It can easily be interfaced with any micro-controller that has ADC function or any development platform like Arduino. Power the IC by applying a regulated voltage like +5V to the input pin and connected the ground pin to the ground of the circuit. If the temperature is 0C, then the output voltage will also be 0V. There will be rise of 0.01V (10mV) for every degree Celsius rise in temperature. The voltage can converted into temperature. Maximum and minimum input voltage are 35V and -2V respectively. Typically 5V output voltage is directly proportional (linear) to temperature (i.e.) there will be a rise of 10mV (0.01V) for every 1C rise in temperature. Accuracy is +/-0.5C. Drain current is less than 60uA . It is a low cost and small temperature sensor hence suitable for remote applications. Available in TO-92, TO-220, TO-CAN and SOIC package [1] The LM35, thus, has an advantage over linear temperature sensors calibrated in Kelvin, as the user is not required to subtract a large constant voltage from its output to obtain convenient centigrade scaling. Low cost is assured by trimming and calibration at the wafer level. The LM35's low output impedance, linear output, and precise inherent calibration make interfacing to readout or control circuitry especially easy. It can be used with single power supplies, or with plus and minus supplies. As it draws only 60 uA from its supply,

it has very low self-heating, less than 0.1degree C in still air. Some of its features are that it operates from 4 to 30 volts. It has a linear 10.0 mV/degree C scale factor and 5 degree C accuracy guarantee-able (at a 25degree C). Low self-heating, 0.08 degree C in still air. Low impedance output which is 0.1 ohm for 1 mA load.

**MAX30100 Pulse Oximeter**

**Figure 4.3:** MAX30100

MAX30100 is an integrated pulse oximeter and heart-rate monitor sensor solution. It's an optical sensor that derives its readings from emitting two wavelengths of light from two LEDs – a red and an infrared one – then measuring the absorbance of pulsing blood through a photo-detector. This particular LED colour combination is optimized for reading the data through the tip of one's finger. It is fully configurable through software registers and the digital output data is stored in a 16-deep FIFO within the device. It has an I2C digital interface to communicate with a host microcontroller. The pulse oximetry subsystem in MAX30100 consists of ambient light cancellation (ALC), 16-bit sigma delta ADC, and proprietary discrete time filter. It has an ultra-low-power operation which makes it ideal for battery operated systems [2]. MAX30100 operates on a supply in the range of 1.8 to 3.3V. It can be used in wearable devices, fitness assistant devices, medical monitoring devices, etc. The MAX30100 can be powered down through software with negligible standby current, permitting the power supply to remain connected at all times. It turns out, oxygenated blood absorbs more infrared light and passes more red light while de-oxygenated blood absorbs red light and passes more infrared light. The main function of the MAX30100 is that it reads the absorption levels for both light sources and stores them. It has ultra-low shutdown current (0.7A) and fast data output capability.

Pin Configuration of MAX30100 Pulse Oximeter Heart Rate Sensor Module:

VIN-Input voltage (1.8V to 5.5V)

SCL-IIC-SCL

SDA-IIC-SDA

INT-MAX30100INT

IRD-MAX30100 IRDRV

RD-MAX30100 RDRV

GND-Ground

Key Features

Pulse oximeter and heart rate sensor solution simplifies design having integrated LEDs, photosensor, and high-performance analog front end. It is in the form of tiny 5.6mm x 2.8mm x 1.2mm 14-Pin optically enhanced system-in-package .Ultra-low-power operation increases battery life for wearable devices like programmable sample rate and LED current for power savings. Also,ultra-low shutdown current (0.7A, typ). It has advanced functionality, improves measurement performance like high SNR. Provides robust motion artifact resilience. Integrated ambient light cancellation is possible and it also has high sample rate capability.

**Blood pressure sensor serial output**

**Figure 4.4:** Sunrom blood pressure sensor with serial output

Blood pressure with serial out is suitable for systems of embedded circuit processing and is used to find the blood pressure of the patient. Compact design fits over the wrist like a watch. Easy to use wrist style eliminates pumping. It can measure systolic and diastolic readings[7] . Blood pressure is the pressure of the blood in the arteries as it is

pumped around the body by the heart. When heart beats, it contracts and pushes blood through the arteries to the rest of the body. This force creates pressure on the arteries. Blood pressure is recorded as two numbers— the systolic pressure (as the heart beats) over the diastolic pressure (as the heart relaxes between beats). The unit which measures this is called sphygmomanometer. Monitoring blood pressure at home is important for many people, especially in case of high blood pressure. Blood pressure does not stay the same all the time. It changes to meet the body's needs. It is affected by various factors including body position, breathing or emotional state, exercise and sleep. It is best to measure blood pressure when the person is relaxed and sitting or lying down. High blood pressure (hypertension) can lead to serious problems like heart attack, stroke or kidney disease. High blood pressure usually does not have any symptoms, so blood pressure should be checked regularly .

Specification

Working Voltage around +5V, 200mA regulated where output format in such a way that serial data at 9600 baud rate(8 bits data, No parity, 1 stop bits). Outputs three parameters in ASCII and sensing unit wire length is 2 meters .

Sensor Pinouts:

TX-OUT = Transmit output. Output serial data of 3V logic level, usually connected to RXD pin of microcontroller/RS232/USB-UART. +5V = Regulated 5V supply input. GND = Board Common Ground.

Some features are that it has intelligent automatic compression and decompression. It is easy to operate and the switching button is operated to start measuring 60 store groups memory measurements. It can read single or all measures. It is an 3 minutes automatic power saving device. Also,intelligent device debugging, automatic power to detect blood pressure. Wrist circumference as 135-195mm. It is fully automatic and has high-accuracy.

### NodeMCU ESP8266

NodeMCU is an open source firmware for which open source prototyping board designs are available. The name "NodeMCU" combines "node" and "MCU" (micro-controller unit). The term "NodeMCU" strictly speaking refers to the firmware rather than the associated development kits. Both the firmware and prototyping board designs are open source. The firmware uses the Lua scripting language. The firmware is based on the eLua project, and built on the Espressif Non-OS SDK for ESP8266. It uses many open source projects, such as lua-cjsonand SPIFFS. Due to resource constraints, users need to select the modules relevant

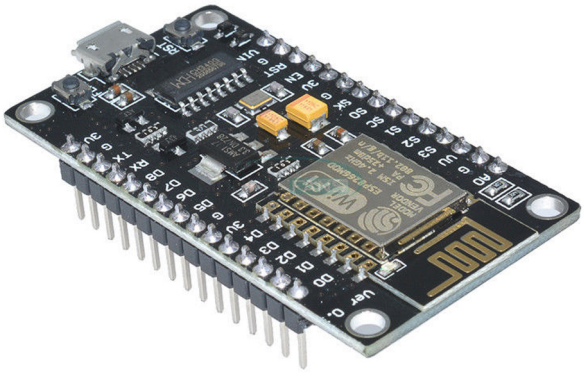

**Figure 4.5:** NodeMCU ESP8266 Wifi Module

for their project and build a firmware tailored to their needs. Support for the 32-bit ESP32 has also been implemented.[8]

The prototyping hardware typically used is a circuit board functioning as a dual in-line package (DIP) which integrates a USB controller with a smaller surface-mounted board containing the MCU and antenna. The choice of the DIP format allows for easy prototyping on breadboards. The design was initially was based on the ESP-12 module of the ESP8266, which is a Wi-Fi SoC integrated with a Tensilica Xtensa LX106 core, widely used in IoT applications. It includes firmware that runs on the ESP8266 Wi-Fi SoC from Espressif Systems, and hardware which is based on the ESP-12 module. ESP8266 is an impressive, low cost WiFi module suitable for adding WiFi functionality to an existing microcontroller project via a UART serial connection. This microprocessor supports RTOS and operates at 80MHz to 160 MHz adjustable clock frequency. NodeMCU has 128 KB RAM and 4MB of Flash memory to store data and programs. Its high processing power with in-built wifi / bluetooth and deep sleep operating features make it ideal for IoT projects. NodeMCU can be powered using Micro USB jack and VIN pin (External Supply Pin). It supports UART, SPI, and I2C interface.

NodeMCU ESP8266 specifications and features:

Microcontroller:Tensilica 32-bit RISC CPU Xtensa LX106. Its operating voltage is around 3.3v and input voltage around 7-12V. There are 16 digital input pins and one analog input pin(ADC). There is only one UART,SPI and I2C. Flash memory is around 4MB, SRAM is around 64 KB. Clock speed is 80 MHz. It have an PCB antenna and it is a small sized module

to fit inside IoT projects.

### XL6009 DC-DC Step-up Power Supply Module

**Figure 4.6:** XL6009 DC-DC Power Supply Module

XL6009 module is a non-isolated step-up boost voltage converter featuring adjustable output voltage and high efficiency. It converts input voltage of 5 to 32V DC to an output voltage of 4 to 38V DC. [9] XL6009 booster module has low cost and its performance is more outstanding. Features are low ultra wide input voltage 3 v to 32 v, the best is 5 to 32 v working voltage range. Low ultra wide output voltage is 5 v to 35 v. Built 4A MOSFET switches enable efficiency up to 94 percentage. High switching frequency- 400KHz and using a small-capacity filter capacitor can achieve very good results.

### SIM900A GSM Module

**Figure 4.7:** SIM900A

The SIM900A is a complete dual-band GSM/GPRS solution in a SMT module which can be embedded in the customer applications. Featuring an industry-standard interface, the SIM900A delivers GSM/GPRS 900/1800MHz performance for voice, SMS, Data, and fax in a small form factor and with low power consumption. With a tiny configuration of 24mmx24mmx3mm, SIM900A can fit in almost all the space requirements in user applications, especially for slim and compact demand of design.[10]

Features:

1. Single supply voltage: 3.4V – 4.5V.
2. Power saving mode: Typical power consumption in SLEEP mode is 1.5mA.
3.Frequency bands: SIM900A Dual-band: EGSM900, DCS1800. The SIM900A can search the two frequency bands automatically. The frequency bands also can be set by AT command.
4. GPRS multi-slot class 10/8GPRS mobile station class B
5.Transmitting power: Class 4 (2W) at EGSM 900, Class 1 (1W) at DCS 1800.
6.Operating Temperature: -30°C to +80°C.
7.DATA GPRS: download transfer max is 85.6KBps, Upload transfer max 42.8KBps.
8.Supports SMS, FAX, MIC and audio input.
9.Features keypad interface,display interface and real time clock.
10.Supports UART interface and a single SIM card.
11.Communication by using AT commands.

**AC Adapter**

**Figure 4.8:** AC Adapter

An AC adapter or AC/DC converter is a type of external power supply, often enclosed in a case similar to an AC plug. Other common names include adapter block, domestic mains adapter,power adapter etc. Adapters for battery-powered equipment may be described as chargers or re-charger. AC adapters are used with electrical devices that require power but do not contain internal components to derive the required voltage and power from mains power. The internal circuitry of an external power supply is very similar to the design that would be used for a built-in or internal supply. External power supplies are used both with equipment with no other source of power and with battery-powered equipment, where the supply, when plugged in, can sometimes charge the battery in addition to powering the equipment. Use of an external power supply allows portability of equipment powered either by mains or battery without the added bulk of internal power components[24]. Another advantage of these designs can be increased safety; since the hazardous 120 or 240 volt mains power is transformed to a lower, safer voltage at the wall outlet and the appliance that is handled by the user is powered by this lower voltage.

**Printed Circuit Board**

A printed circuit board, or PCB, is used to mechanically support and electrically connect electronic components using conductive pathways, tracks or signal traces etched from copper sheets laminated onto a non-conductive substrate. It is also referred to as printed wiring board (PWB) or etched wiring board. A PCB populated with electronic components is a printed circuit assembly (PCA), also known as a printed circuit board assembly or PCB Assembly (PCBA)[26].

Alternatives to PCBs include wire wrap and point-to-point construction. PCBs are often less expensive and more reliable than these alternatives, though they require more layout effort and higher initial cost. PCBs are much cheaper and faster for high-volume production since production and soldering of PCBs can be done by automated equipment. Much of the electronics industry's PCB design, assembly, and quality control needs are set by standards that are published by the IPC organization.

## 4.3 Hardware Interfaces

### LM35 interfacing with NodeMCU

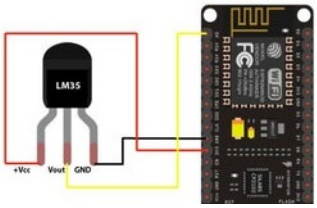


**Figure 4.9:** LM35 interfacing with NodeMCU

The circuit connections are made as follows:
Pin 1 of the LM35 goes into +3v of the NodeMCU. Pin 2 of the LM35 goes into analog pin A0 of the NodeMCU. Pin 3 of the LM35 goes into ground pin (GND) of the NodeMCU. The analog output voltage from LM35 must first be read from the Vout pin of LM35. This will be the raw value divided by 1024 times 3300. It is divided by 1024 because a span of 1024 occupies 3.3v. Here we get the ratio of the raw value to the full span of 1024 and then multiply it by 3300 to get the milli-volt value. Since the output pin can give out a maximum of 3.3 volts, 1024 represents the possible range it can give out . [11]

Download the "LM35NodeMCU.ino" file and open it up in the Arduino IDE. Then create a new sketch and paste the code in the Arduino IDE and hit upload.

1. Go to Tools
2. Board - NodeMCU 1.0 (ESP - 12E Module)
3. Choose the port.
4. NodeMCU model is selected,the serial port is ticked and then click upload button[27].

### MAX30100 interface with NodeMCU

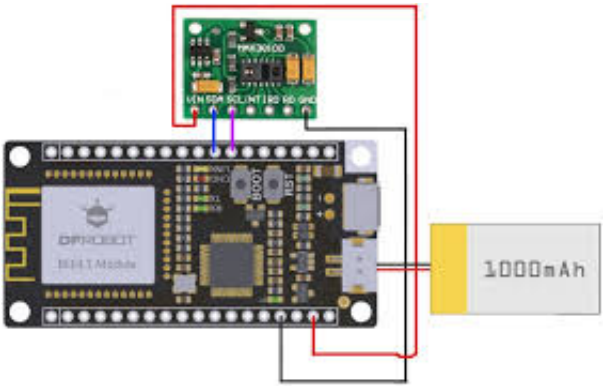


**Figure 4.10:** MAX30100 interface with NodeMCU

MAX30100 is an integrated pulse oximetry and heart-rate monitor biosensor module. It includes internal LEDs, photodetectors, optical elements, and low-noise electronics with ambient light rejection. The MAX30102 provides a complete system solution to ease the design-in process for mobile and wearable devices[12]. NodeMCU is mapped to the internal GPIO pin 16 of ESP8266

MAX30100 is an integrated pulse oximetry and heart-rate monitor sensor solution. It integrates two LEDs (IR and Red), a photodetector (Red), optimized optics, and low-noise analog signal processing to detect pulse oximetry and heart-rate signals. It is fully configurable through software registers, and the digital output data is stored is stored in a 16-deep FIFO within the device. It has an I2C digital interface to communicate with a host microcontroller. The pulse oximetry subsystem in MAX30100 consists of ambient light cancellation (ALC), 16-bit sigma delta ADC, and proprietary discrete time filter[28]. It has an ultra-low-power operation which makes it ideal for battery operated systems. MAX30100 operates on a supply in the range of 1.8 to 3.3V. It can be used in wearable devices, fitness assistant devices. In our project,this sensor interface with NodeMCU in such a way that D1,D2,D3 ie general purpose input or output pins connected to INT active-low interrupt (open-drain), SCL I2C clock input, SDA I2C clock data, bidirectional (open-drain) of MAX30100.

**SIM900A interfacing with NodeMCU**

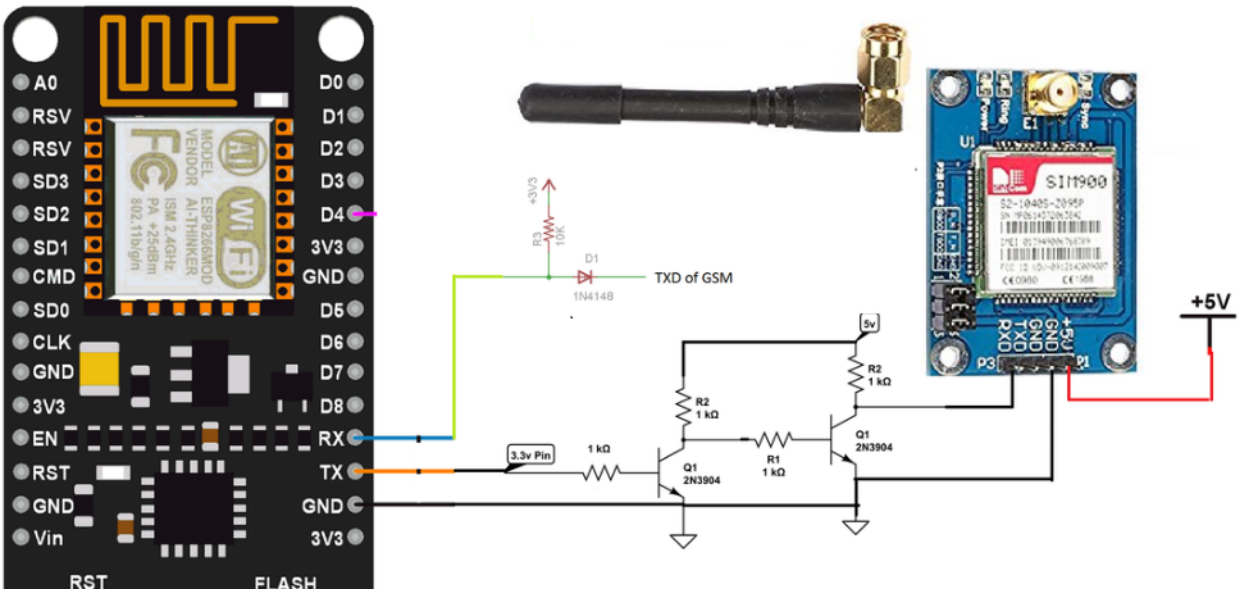


**Figure 4.11:** SIM900A interface with NodeMCU

AT Commands

AT —This command replies back the status of the GSM module. If ready it sends back “OK”.

If not it sends back “Error”.

AT+CMGF=1 — Sets GSM module in SMS text mode.

AT+CMGS= “Cell Number” — Enter the cell number to send sms. Include the Cell number in double quotes.

After this write your text message.[29]

Then press CTRL+Z together to send SMS. Since we are sending message through plan code. So for CTRL+Z combined key ,it requires the code which is 26(Decimal) or 0x1A(Hexadecimal). Nodemcu works on 3.3 volts where as SIM900A module works on 5 volt power supply. Since both the modules work on different TTL levels there for commands and messages from each module first must be converted to receiver operational TTL level before reaching them. TX pin of NodeMCU sends signals out at 3.3v TTL level. The 3.3v TTL signal is converted to 5v TTL signal before reaching SIM900A module. First transistor converts the TX signal to 5 volt output but the output is inverted. Inverted output is input to second transistor. IT converts the inverted output to original signal with TTL level up to 5v. The output TTL signal is received by the RX pin of SIM900A module. Tx of SIM900A is connected to Rx of NodeMCU with level simple level shifter circuit in between. Serial UART channel-0 of NodeMCU is used for inter NodeMCU and sim900 communication. Communication is carried out at 9600 bps. Arduino IDE is used for writing and compiling code. In the setup function serial channel is initialized. In loop function AT commands are send to GSM

**Blood pressure sensor interface with NodeMCU**

It is easy to interface with NodeMCU having UART. Configure the MCU to communicate at 9600 baud rate. Start reading incoming ASCII data. ASCII data can be used to display or do calculations as per project requirement. ASCII packets can be converted to integer. Pin configuration TX-OUT stands for transmit output. Output serial data of 3V logic level connected to D0 ,which is the generalpurpose input or output pin) of NodeMCU. Supply voltage of input is 5v. GND pin is connected to common ground.

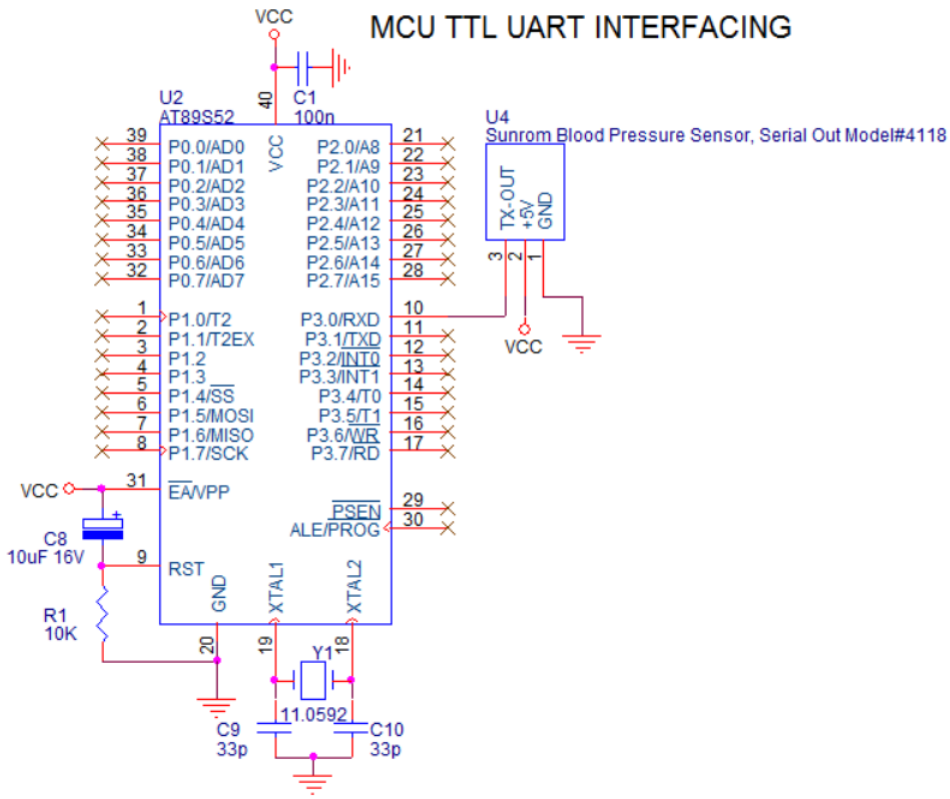


**Figure 4.12:** Blood pressure sensor interface with NodeMCU

# Chapter 5

# SYSTEM IMPLEMENTATION

## 5.1 Arduino IDE Software

**Figure 5.1:** Code compiled in Arduino

The Arduino Integrated Development Environment (IDE) is a cross-platform application (for Windows, macOS, Linux) that runs machine code compiled from either C, C++ or any other language that has a compiler for the Arduino instruction set. It is used to write and upload programs to Arduino compatible boards, but also, with the help of 3rd party cores, other vendor development boards.[15] The source code for the IDE is released under the GNU General Public License, version 2.[16] The Arduino IDE supports the languages C and C++ using special rules of code structuring.[17] The Arduino IDE supplies a software library from the Wiring project, which provides many common input and output procedures.

User-written code only requires two basic functions, for starting the sketch and the main program loop, that are compiled and linked with a program stub main() into an executable cyclic executive program with the GNU toolchain, also included with the IDE distribution. The Arduino IDE employs the program avrdude to convert the executable code into a text file in hexadecimal encoding that is loaded into the Arduino board by a loader program in the board's firmware.[18] By default, avrdude is used as the uploading tool to flash the user code onto official Arduino boards. With the rising popularity of Arduino as a software platform, other vendors started to implement custom open source compilers tools (cores) that can build and upload sketches to other MCUs that are not supported by Arduino's official line of MCUs.

In our project, we use the Arduino IDE platform to write ,compile and upload the code required to measure the vital parameters. The arduino code contains commands for measuring temperature,blood pressure,pulse rate and oxygen content in blood. After compiling, the code is uploaded to the NodeMCU. Threshold values associated with each parameter are specified in the code so that the NodeMCU will recognize the functions to be performed. NodeMCU contains the codes for interfacing ThingSpeak application and the different sensors. Also the system will send a message using GSM ,when the measured parameters of the patient vary from the coded threshold value.

## 5.2 ThingSpeak

ThingSpeak is an IoT analytics service that allows you to aggregate, visualize, and analyze live data streams in the cloud. ThingSpeak provides instant visualizations of data posted by the devices to ThingSpeak. With the ability to execute MATLAB code in ThingSpeak, you can perform online analysis and process data as it comes in. ThingSpeak is often used for prototyping and proof-of-concept IoT systems that require analytics. Data can be sent from any internet-connected device directly to ThingSpeak using a Rest API or MQTT. In addition, cloud-to-cloud integrations with The Things Network, Senet, the Libelium Meshlium gateway, and Particle.io enable sensor data to reach ThingSpeak over LoRaWAN and 4G or 3G cellular connections.With ThingSpeak, you can store and analyze data in the cloud without configuring web servers, and you can create sophisticated event-based email alerts that trigger based on data coming in from your connected devices.[19]

**Create a ThingSpeak Channel:**

Create a Channel

1. Sign In to ThingSpeak using your MathWorks Account, or create a new MathWorks account[30].
2. Click Channels. Go to MyChannels.
3. On the Channels page, click New Channel.

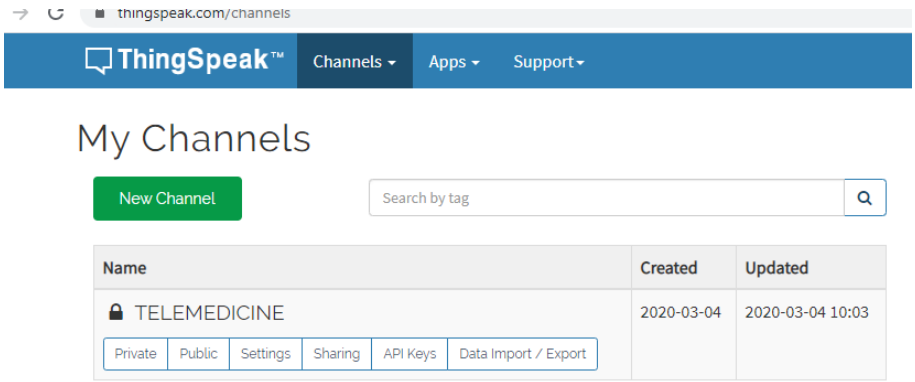


**Figure 5.2:** Created a channel 'TELEMEDICINE'

4. Check the boxes next to Fields 1–4. Enter these channel setting values:

Name: TELEMEDICINE

Field 1: Pulse

Field 2: Pulseoximeter

Field 3: Temperature

Field 4:Blood pressure

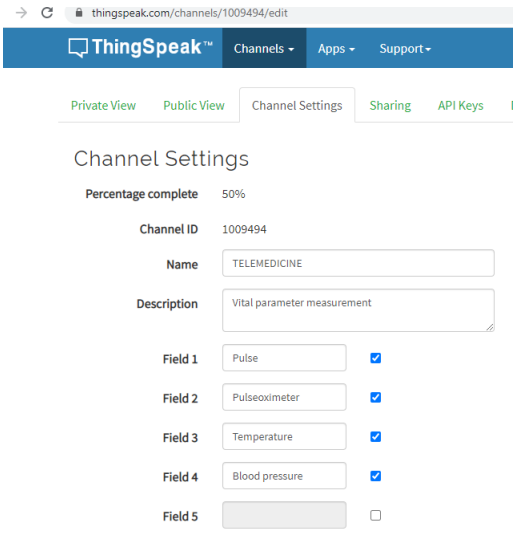


**Figure 5.3:** Channel settings

5. Click save channel at the bottom of the settings.Then these tabs will appear:

Private View: This tab displays information about the channel that only user can see.

Public View: It allows user to make the channel publicly available, use this tab to display selected fields and channel visualizations.

Channel Settings: This tab shows all the channel options set at creation. User can edit, clear, or delete the channel from this tab.

Sharing: This tab shows channel sharing options.User can set a channel as private, shared with everyone (public), or shared with specific users.

API Keys: This tab displays the channels API keys. Use the keys to read from and write to the channel.

Data Import/Export: This tab enables user to import and export channel data.

# Chapter 6

# METHODOLOGY

## 6.1 Detailed Circuit Diagram and Working

This project framework consist LM35 temperature sensor ,blood pressure sensor ,MAX30100 pulse oximeter combined with heart beat sensor,XL6009 power module,SIM900A GSM module and NodeMCU ESP8266. Methodology consist four stages. They are data acquisition,data processing ,data analysis and data output. In data acquisition we collect data from sensors. These sensors placed on the patient in such a way that the index finger of the patient is placed on the LM35 sensor for measuring temperature, the cuff of the blood pressure sensor is wrapped around the wrist of the patient to measure blood pressure and both the pulse rate and oxygen level in blood can be measured by placing the index finger on the MAX30100 pulse oximeter sensor. In data processing the sensor outputs are send to NodeMCU, which runs the code of sensors uploaded on it via text editing programme Arduino IDE and sends the result to ThingSpeak . NodeMCU pushes data to the ThingSpeak server via the MQTT protocol and an alert message will be send to the smartphone with the help of GSM module if the values deviate from the normal range.

MQTT is a publish or subscribe architecture used to connect bandwidth and power constrained devices over wireless networks. The main advantages of MQTT broker are it eliminates vulnerable and insecure client connections.[20] It can easily scale from a single device to thousands,manages and tracks all client connection states, including security credentials and certificates. Also,reduced network strain without compromising the security (cellular or satellite network).In data analysis stage, NodeMCU analyse the data from sensors whether they cross the threshold value or not. The measurements may deviate due to increase or decrease of temperature,variation in oxygen level ,variation in blood pressure or variation in pulse rate from threshold value as reference to stable condition. Threshold values for temperature are set as 45 degree for upper threshold and 25 degree for lower threshold. For blood pressure the threshold is set as 100mmHg. For percentage of oxygen in blood the threshold is 90 percentage . Doctors as well as the patients relative can view the signal in the channel created in ThingSpeak and

data from patient will be store in cloud storage. ThingSpeak enables sensors, instruments, and websites to send data to the cloud where it is stored in a private channel. It stores data in private channels by default, but public channels can be used to share data with others. Once data is in a ThingSpeak channel, it can be analyzed or interact with social media, web services, and other. Data analysis take place in NodeMCU which have in built wifi. Data is sent to the mobile phone with the help of SIM900A GSM module. Working of GSM modem is based on commands, the commands always start with AT (which means ATtention) and finish with a lt;CRgt; character. In data output stage the vital parameter measurements can be viewed in the ThingSpeak channel.

Working Steps:

1 When the patient places his/her finger on the sensing unit, it measures the heartbeat,blood pressure,oxygen level in blood and body temperature.

2. The sensed data rates are sent to NodeMCU in the form of signals.

3.The NodeMCU processes the same data and would transmit the data to the Wi-Fi module.

4. The Wi-Fi module would then retransmit the data to the smart phone application.

5. The alert message will be shown in the smartphone if there is abnormality in the sensed rate by using the GSM Module.

6.The vital parameter values can also be viewed in the IoT analytic platform ThingSpeak.

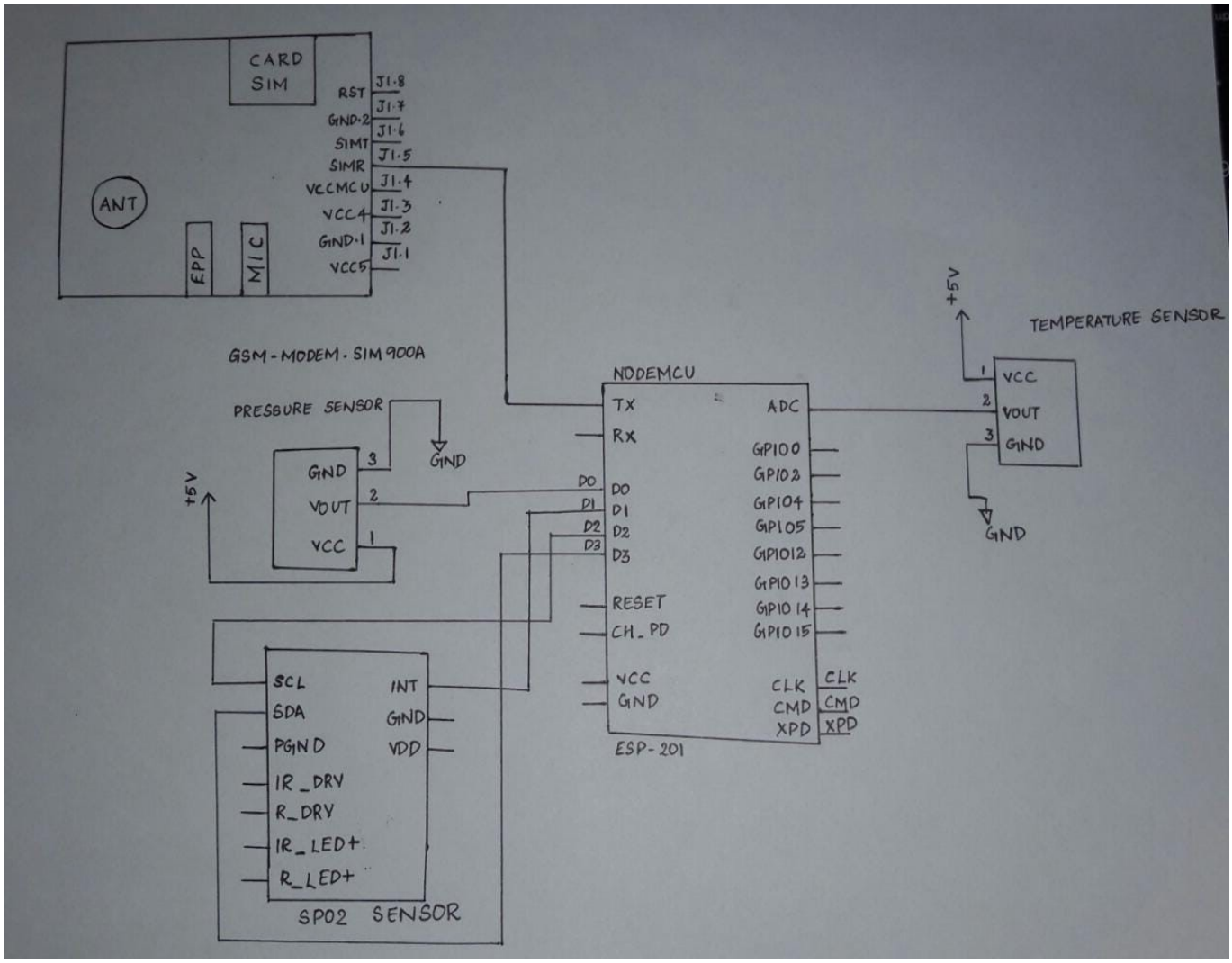


**Figure 6.1:** Circuit Diagram

# Chapter 7

# RESULTS AND DISCUSSIONS

The proposed project would be effective for the remote monitoring of patients. Measurements are done by various sensors like temperature sensor,blood pressure sensor and pulse oximeter sensor, which are easy to operate. The patients physiological data are gathered by the sensors. The collected data are then processed by the NodeMCU and the output can be viewed in the ThingSpeak channel. In case of deviation from normal range a message would be sent to the doctor via GSM.

The normal pulse rate is 60 to 100 per minute. The normal oxygen saturation level in blood should range from 95 to 100 percent. Values under 90 percent are considered low. So the threshold value of percentage of oxygen in blood is set to 90 percentage. Normal body temperature is 37 degree C, however it might slightly vary due to various factors. Threshold values for temperature are set as 40 degree C for upper threshold and 25 degree C for lower threshold. For blood pressure the normal range is 120mmHg systolic and threshold is set as 100mmHg. The recorded vital parameter values were taken from one of our group members for testing the systems functionality. The high temperature value in the data output section was obtained by bringing a soldering iron near the LM35 sensor. The software for the proper functioning of this framework is done in Arduino IDE programming platform. We successfully compiled the C code and uploaded it to NodeMCU. The programming window with compilation status is given below.

**Adavantages**

Adding virtual care to your practice offers patients simple, on-demand care – without the usual wasted time and cost of most in-person visits. Patients who live in remote locations or who are home-bound will benefit greatly from this system.

- Cost effectiveness and healthcare savings-Remote analysis and monitoring services and electronic data storage significantly reduce healthcare service costs and helps to save

money. It also reduces unnecessary non-urgent visits to hospitals and eliminates transportation expenses for regular checkups.

- Increased patient engagement-When patients are committed to their own healthcare goals, it leads to lower costs and improved health.
- Better patient care quality-Our project offers patient-centered approaches, such as improved timeliness of care. This is critical to quality patient care. Patients can address healthcare issues quickly and learn about treatment options within minutes.

A study showed that telemedicine patients have 38 percentage fewer hospital admissions. One of the biggest advantages is that it gives access to specialists and information that you might not readily have access to otherwise. The specialist can observe the temperature ,heart beat ,percentage of oxygen,blood pressure,pulse rate and the patient can hear firsthand about diagnosis and treatment options.

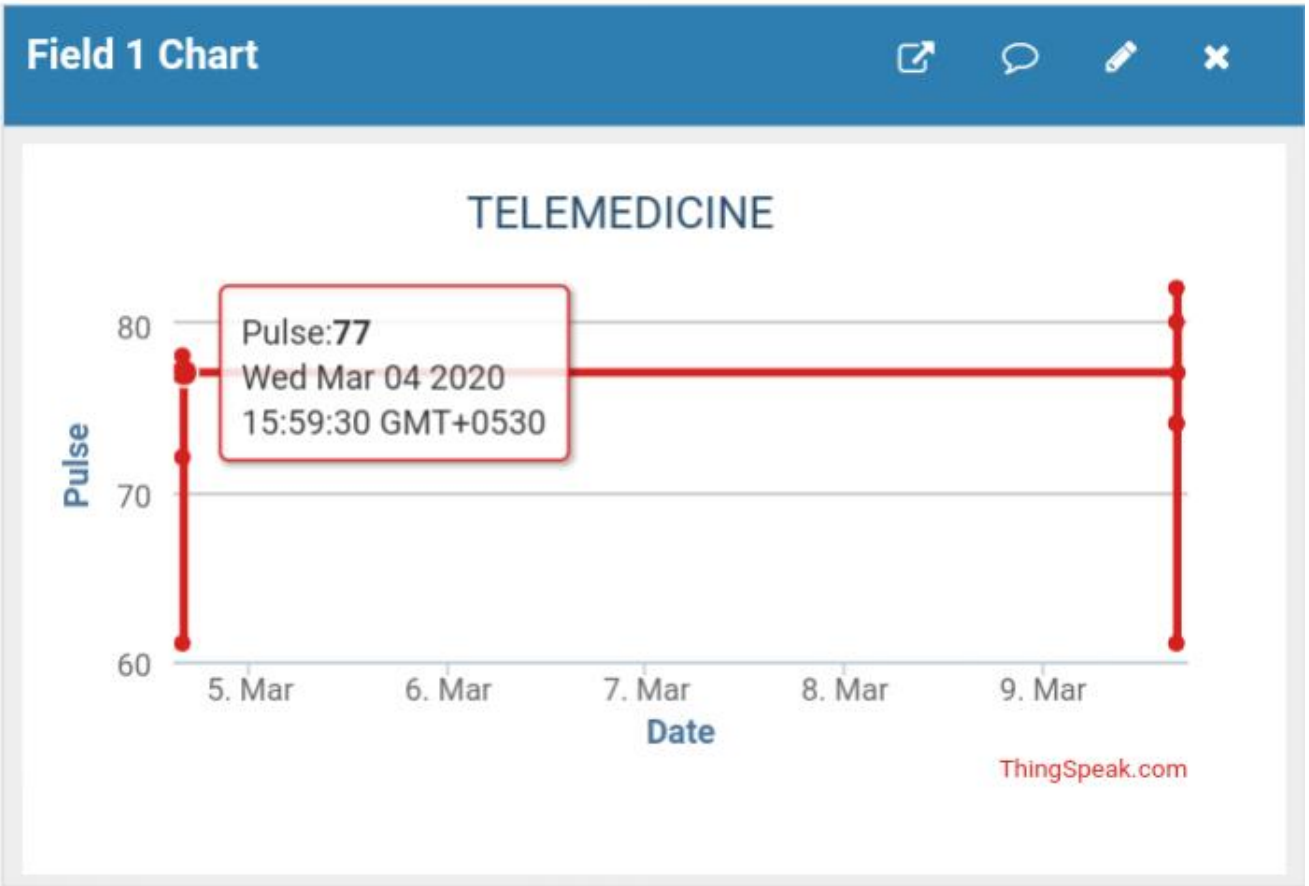


**Figure 7.1:** Field 1: Pulse rate measurement

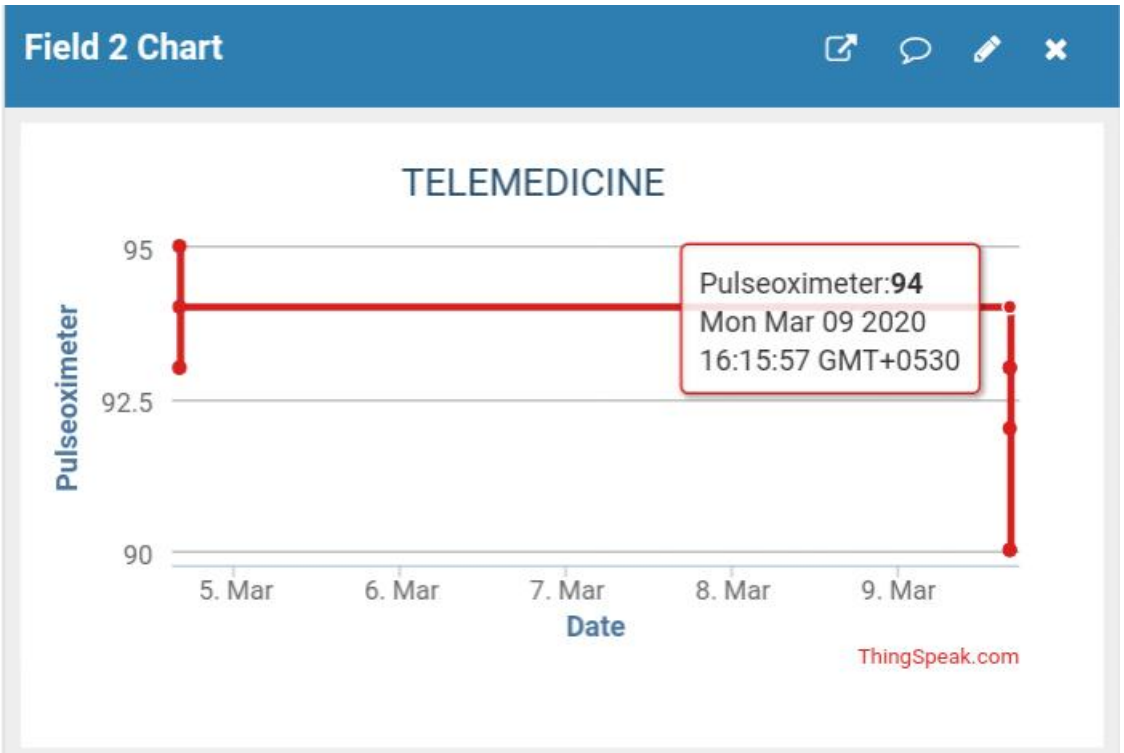


**Figure 7.2:** Field 2:Percentage of oxygen in blood

**Figure 7.3:** Field 3:Temperature measurement

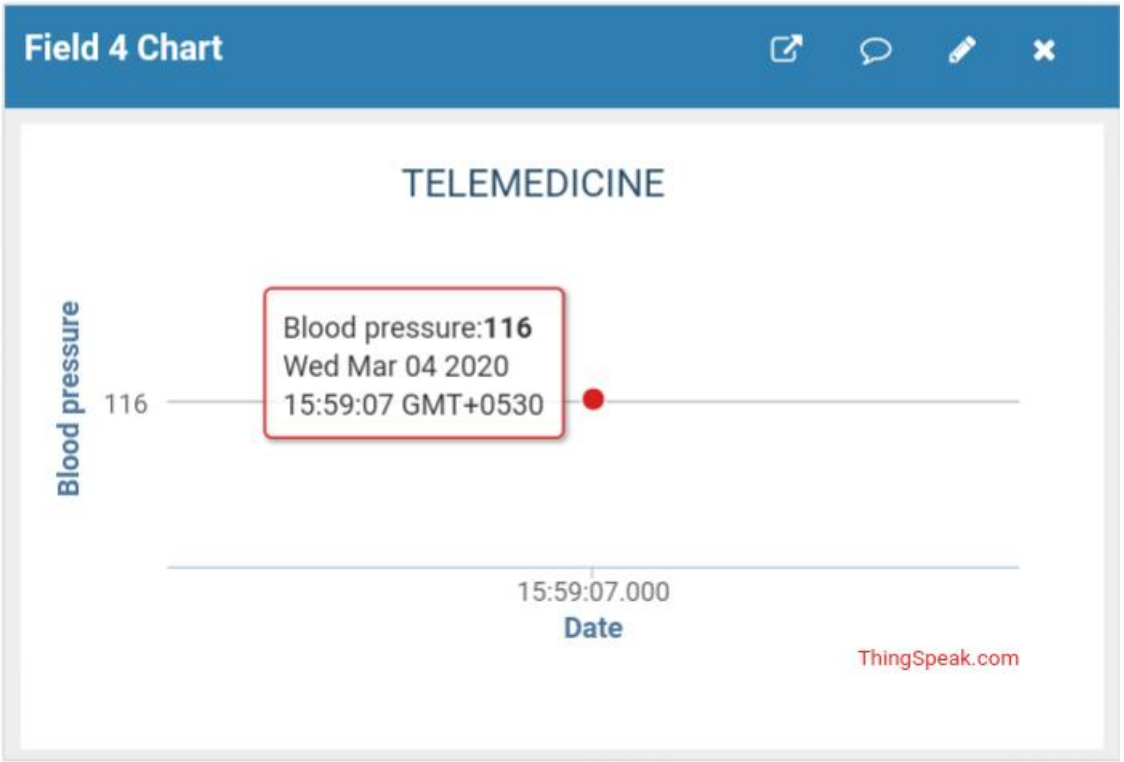


**Figure 7.4:** Field 4: Blood pressure measurement

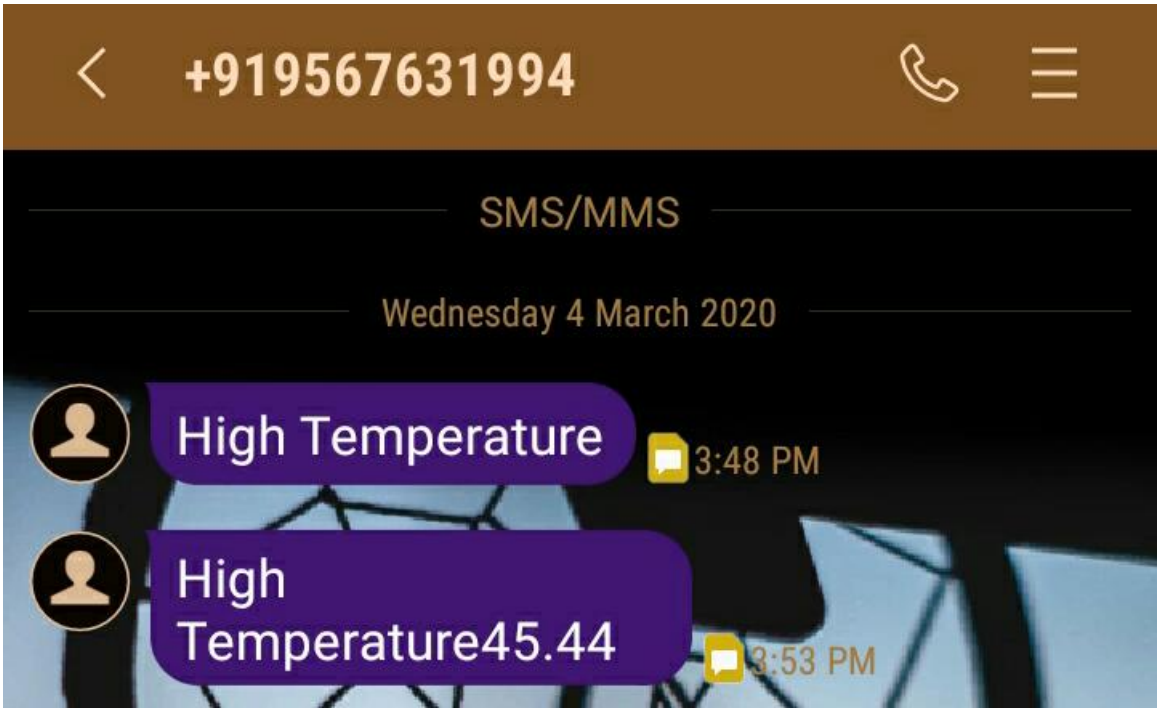


**Figure 7.5:** Message sent through GSM

# Chapter 8

# CONCLUSION AND FUTURE SCOPE

The patient monitoring system (PMS) plays a crucial role in early detection, diagnosis, and decision support. A lot of technological shift is observed in every area of life in this world, especially in the area of telemedicine. Reports indicate that before a cardiac or respiratory arrest, 84 percentage of the patients have physiological problems[21]. Moreover, sending the measured data using Internet of Things (IoT) is an advanced way of wireless communication in the present scenario. During the shift duties of nurses, sometimes the data collected by another person may be out of sight which makes it difficult for the doctor to follow up the patient's case. Healthcare monitoring system designed in the present work will drastically reduce hospitalization, waiting time, consultation time, burden on medical staff, and overall health cost. The vital signs of patient are measured and sent to the personal computer of the doctor.To achieve this, NodeMCU is used with ESP8266 for wifi connection. Sensors for body temperature, pulse rate, blood pressure, and oxygen saturation in blood are connected to the NodeMCU, and the measured readings are sent to the ThingSpeak server for web-based visualizations. The proposed system would be helpful in diagnosing hypotension(when blood pressure readings are lower than 90 mm Hg systolic) and hypoxemia(oxygen saturation is less than 90). The pulse rate can be checked to view how well the heart is working.

This system will help in identifying issues related to medical health. Through IOT perspective medical emergencies like asthma attack, heart failure, diabetes can be monitored via connected devices. Thus telemedicine is the roadmap for improved medical care in rural areas. Thus, future of telemedicine will depend on human factors, economy and technology. Behaviors related to technology affect change at the individual, organizational and societal level. Personnel shortages and decreasing third-party reimbursement are significant drivers of technology-enabled health care in the industrialized world, particularly in the areas of home care and self-care. Technology has made it easy for doctors to detect various diseases and it is restricted only to people in urban areas but low cost telemedicine has it made easy for people in rural areas with simple and standard healthcare infrastructure. Rapid growth in the availability of low-power, hand-held medical monitoring devices advanced the telemedicine for poor

and reduces travel costs by both parties for consultation, diagnosis, and follow up is the largest benefit. Steps that has to be taken to reach telemedicine to common people include creating technology-neutral insurance payment policies, adopting a standard definition for tele-health, funding research to continually improve the quality and lower the cost of tele-health programs.

# BIBLIOGRAPHY

[1] https://components101.com/lm35-temperature-sensor

[2] https://www.maximintegrated.com/en/products/sensors/MAX30100.html

[3] M. Görs, R. Marx, M. Albert, M. Schäfer, and K. Schilling, "Telemedicine techniques for remote support of patients in dialysis and COPD," in Proc. 2nd ICICI-BME, 2011, pp. 23–28

[4] F. Koehler and S. D. Anker, "Noninvasive home telemonitoring: The Trans-European Network-Home-Care Management System," J. Amer.College Cardiol., vol. 48, no. 4, pp. 850–851, author reply pp. 851–852,Aug. 2006.

[5] J. G. Cleland, A. A. Louis, A. S. Rigby, U. Janssens, and A. H. Balk,"Noninvasive home telemonitoring for patients with heart failure at high risk of recurrent admission and death: The Trans-European NetworkHome-Care Management System (TEN-HMS) study," J. Amer. College Cardiol., vol. 45, no. 10, pp. 1654–1664, 2005.

[6] Arduino UNO and GSM Based Wireless Health Monitoring System for Pa-tients Pratiksha W. Digarse, Sanjaykumar L.Patil . International Conference onIntelligent Computing and Control Systems ICICCS 2017

[7] https://www.sunrom.com/c/ecg-bp

[8] ESP8266EX Datasheet Version 4.3 .Espressif Systems IOT Team

[9] https://www.electronicscomp.com/xl6009-dc-dc-adjustable-step-up-boost-power-converter-module-india

[10] . SIM900 The GSM/GPRS Module for M2M application.

[11] ].https://www.electronicwings.com/nodemcu/lm35-interfacing-with-nodemcu

[12] https://www.electronicwings.com/components/max30100-pulse-oximeter-and-heart-rate-sensor

[13] https://wiki.eprolabs.com/index.php?title=SIM900AGSMGPRSModule

[14] SIM900 Hardware Design, https://components101.com/wireless/sim900a-gsm-module

[15] "Updated: Arduino announces FPGA board, ATmega4809 in Uno Wi-Fi mk2, cloud-based IDE and IoT hardware". Electronics Weekly. 2018-05-18. Retrieved 2018-06-14.

[16] "The arduino source code". The Arduino source code.

[17] Purdum, Jack J. Beginning C for Arduino : learn C programming for the Arduino (Second ed.). [New York]. ISBN 9781484209400. OCLC 912875060.

[18] Banzi, Massimo; Shiloh, Michael. Getting started with Arduino (Third ed.). Sebastopol, CA. ISBN 9781449363314. OCLC 898290173.

[19] https://thingspeak.com/pages/learnmore

[20] "MQTT 3.1.1 specification". OASIS. December 10, 2015. Retrieved April 25,2017.

[21] Franklin and Mathew in CritCare Med 22(22):244–247, 1994

[22] A Smart, Low Cost, Wearable Technology for Remote Patient Monitoring.2019 IEEE Global Conference on Internet of Things (GCIoT).DOI:10.1109/gciot47977.2019.9058401 Babar, E. T. R., Usmani, A. A., Kayani,A., Yaqub, A., Rehman, M. U.

[23] 2 IoT based Telemedicine System Mr. Ojas Sonnis, Mr. Akshay Sunka, Mr.Rohitkumar Singh, Mr.Trupti Agarkar IEEE International Conference on Power,Control, Signals and Instrumentation Engineering (ICPCSI-2017)

[24] https://en.wikipedia.org/wiki/ACadapter

[25] IoT based Smart Remote Health Monitoring System. 2020 International Conference on Electrical and Electronics Engineering (ICE3) 2020.Verma, P., Mishra,R. DOI:10.1109/ice348803.2020.9122864

[26] https://en.wikipedia.org/wiki/Printedcircuitboard

[27] https://www.instructables.com/id/Interface-LM35-With-NodeMCU/

[28] https://how2electronics.com/max30100-pulse-oximeter-with-esp8266/

[29] https://www.engineersgarage.com/esp8266/send-text-message-with-nodemcu/

[30] https://www.mathworks.com/help/thingspeak/collect-data-in-a-new-channel.html

# Chapter 9

# APPENDIX

## 9.1 Software

The software for this project is done using C programming with the help of Arduino IDE platform.

**Code for system operation**

```
#include "ThingSpeak.h"
#include "MAX30100_PulseOximeter.h"
#include <ESP8266WiFi.h>
#define REPORTING_PERIOD_MS 1000

PulseOximeter pox;
float BPM, SpO2,temp;
uint32_t tsLastReport = 0;

char phone_no[]="9072095511";
char ssid[] = "Albus"; // your network SSID (name)
char pass[] = "ericrobert"; // your network password

int keyIndex = 0;
WiFiClient client;

unsigned long myChannelNumber = 1009494;
const char * myWriteAPIKey = "4AP3F1GKTE2R0HUZ";

void onBeatDetected()
{
```

```
Serial.println("Beat Detected!"); }

void setup()
{
Serial.begin(9600); // Initialize serial

pinMode(16, OUTPUT);
pinMode(A0, INPUT);
pinMode(D8,INPUT);

WiFi.mode(WIFI_STA);
ThingSpeak.begin(client); // Initialize ThingSpeak

if (!pox.begin())
{
Serial.println("FAILED");
}
else
{
Serial.println("SUCCESS");
pox.setOnBeatDetectedCallback(onBeatDetected);
}

if(WiFi.status() != WL_CONNECTED)

{
Serial.print("Attempting to connect to SSID: ");
Serial.println(ssid);
while(WiFi.status() != WL_CONNECTED)
{
WiFi.begin(ssid, pass); // Connect to WPA/WPA2 network. Change this line if using open or
WEP network.
Serial.print(".");
```

```
delay(5000);
}
Serial.println(".");
}
}

int blood_pressure;
String Blood_pressure;

void loop()
{
pox.update();

if(!digitalRead(D8))
{
if(Serial.available())

Blood_pressure=Serial.readString();
blood_pressure=Blood_pressure.toInt();
while(!digitalRead(D8));

}

BPM=pox.getHeartRate();
SpO2=pox.getSpO2();

if (millis() - tsLastReport > REPORTING_PERIOD_MS)
{

Serial.print("Heart rate:");
Serial.print(BPM);
Serial.print(" bpm / SpO2:");
Serial.print(SpO2);
Serial.println(" %");
```

```
tsLastReport = millis();
}

temp=analogRead(A0);
temp=(3.3*temp*1000.0)/(1024*10);

if(temp > 40 | | temp < 25)

gsm();

if(blood_pressure<=100)
gsm_p();

if(SpO2<90)

gsm_spo2();

ThingSpeak.setField(1, BPM);

ThingSpeak.setField(2, SpO2);

ThingSpeak.setField(3, temp); // write to ThingSpeak channel

int x=ThingSpeak.writeFields(myChannelNumber, myWriteAPIKey);

if(x == 200)
{
Serial.println("Channel update successful.");
}
else
{
Serial.println("Problem updating channel. HTTP error code " + String(x));
}
```

```
delay(20000); // Wait 20 seconds to update the channel again.
}

void gsm()
{
Serial.println("AT+CMGF=1");
delay(2000);

Serial.print("AT+CMGS=¨¨");
Serial.print(phone_no);
Serial.write(0x22);
Serial.write(0x0D); // hex equivalent of Carraige return
Serial.write(0x0A); // hex equivalent of newline
delay(2000);

Serial.print("High Temperature: "+String(temp));
delay(500);

Serial.println(char(26));
}

void gsm_p()
{
Serial.println("AT+CMGF=1");
delay(2000);

Serial.print("AT+CMGS=¨");
Serial.print(phone_no);
Serial.write(0x22);
Serial.write(0x0D); // hex equivalent of Carraige return
Serial.write(0x0A); // hex equivalent of newline
delay(2000);

Serial.print("Low Pressure: " + String(Blood_pressure));
```

```
delay(500);

Serial.println(char(26));
}

void gsm_spo2()
{
Serial.println("AT+CMGF=1");
delay(2000);

Serial.print("AT+CMGS=¨¨");
Serial.print(phone_no);
Serial.write(0x22);
Serial.write(0x0D); // hex equivalent of Carraige return
Serial.write(0x0A); // hex equivalent of newline
delay(2000);
Serial.print("LOW SpO2: " + String(SpO2));
delay(500);

Serial.println(char(26));
}
```