Sheet: STM32F407VGT6

File: STM32F407VGT6.sch

Sheet: POWER

File: POWER.sch

Sheet: MOSFET

File: MOSFET.sch

Sheet: THM

File: THM.sch

Sheet: ENDSTOP

File: ENDSTOP.sch

Sheet: SD

File: SD.sch

Sheet: USB

File: USB.sch

Sheet: WIFI

File: WIFI.sch

Sheet: DRIVE

File: DRIVE.sch

Sheet: P-AUX

File: P-AUX.sch

FID1 Fiducial

FID2 Fiducial

FID3 Fiducial

M1 M2

Github : https://github.com/makerbase-mks

FaceBooK : https://www.facebook.com/Makerbase.mks/

**Makerbase**

Sheet: /

File: MKS Robin Nano V3.sch

**Title: MKS Robin Nano**

| Size: A4 | Date: 2020-12-31 | **Rev: V3.0_002** |
|---|---|---|
| KiCad E.D.A. kicad (5.1.4)-1 | | Id: 1/11 |

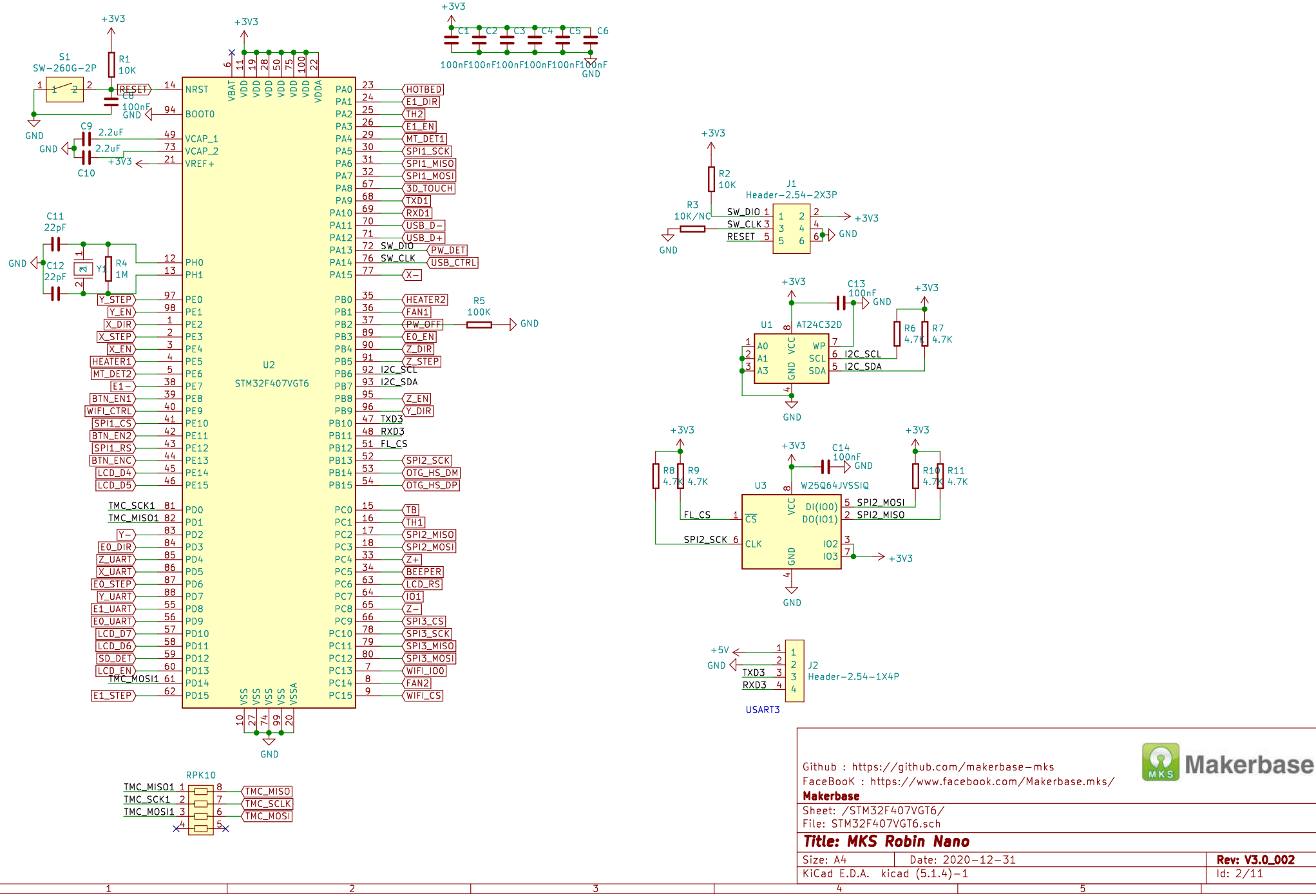
+3V3
S1
SW-260G-2P
R1
10K
RESET
C8
100nF
GND
BOOT0
C9
2.2uF
C10
2.2uF
VCAP_1
VCAP_2
VREF+
C11
22pF
C12
22pF
Y1
R4
1M
PH0
PH1
U2
STM32F407VGT6
NRST
VBAT
VDD
VSS
VDDA
C1
C2
C3
C4
C5
C6
100nF
R5
100K
PA0 HOTBED
PA1 E1_DIR
PA2 TH2
PA3 E1_EN
PA4 MT_DET1
PA5 SPI1_SCK
PA6 SPI1_MISO
PA7 SPI1_MOSI
PA8 3D_TOUCH
PA9 TXD1
PA10 RXD1
PA11 USB_D-
PA12 USB_D+
PA13 SW_DIO PW_DET
PA14 SW_CLK USB_CTRL
PA15 X-
PB0 HEATER2
PB1 FAN1
PB2 PW_OFF
PB3 E0_EN
PB4 Z_DIR
PB5 Z_STEP
PB6 I2C_SCL
PB7 I2C_SDA
PB8 Z_EN
PB9 Y_DIR
PB10 TXD3
PB11 RXD3
PB12 FL_CS
PB13 SPI2_SCK
PB14 OTG_HS_DM
PB15 OTG_HS_DP
PC0 TB
PC1 TH1
PC2 SPI2_MISO
PC3 SPI2_MOSI
PC4 Z+
PC5 BEEPER
PC6 LCD_RS
PC7 IO1
PC8 Z-
PC9 SPI3_CS
PC10 SPI3_SCK
PC11 SPI3_MISO
PC12 SPI3_MOSI
PC13 WIFI_IO0
PC14 FAN2
PC15 WIFI_CS
PD0 TMC_SCK1
PD1 TMC_MISO1
PD2 Y-
PD3 E0_DIR
PD4 Z_UART
PD5 X_UART
PD6 E0_STEP
PD7 Y_UART
PD8 E1_UART
PD9 E0_UART
PD10 LCD_D7
PD11 LCD_D6
PD12 SD_DET
PD13 LCD_EN
PD14 TMC_MOSI1
PD15 E1_STEP
Y_STEP
Y_EN
X_DIR
X_STEP
X_EN
HEATER1
MT_DET2
E1-
BTN_EN1
WIFI_CTRL
SPI1_CS
BTN_EN2
SPI1_RS
BTN_ENC
LCD_D4
LCD_D5
RPK10
TMC_MISO1
TMC_SCK1
TMC_MOSI1
TMC_MISO
TMC_SCLK
TMC_MOSI
R2
10K
R3
10K/NC
J1
Header-2.54-2X3P
SW_DIO
SW_CLK
RESET
U1
AT24C32D
A0
A1
A3
WP
SCL
SDA
I2C_SCL
I2C_SDA
C13
100nF
R6
4.7K
R7
4.7K
R8
4.7K
R9
4.7K
U3
W25Q64JVSSIQ
CS
CLK
DI(IO0)
DO(IO1)
IO2
IO3
FL_CS
SPI2_SCK
SPI2_MOSI
SPI2_MISO
C14
100nF
R10
4.7K
R11
4.7K
+5V
TXD3
RXD3
J2
Header-2.54-1X4P
USART3
Github : https://github.com/makerbase-mks
FaceBook : https://www.facebook.com/Makerbase.mks/
Makerbase
Sheet: /STM32F407VGT6/
File: STM32F407VGT6.sch
Title: MKS Robin Nano
Size: A4
Date: 2020-12-31
Rev: V3.0_002
KiCad E.D.A. kicad (5.1.4)-1
Id: 2/11

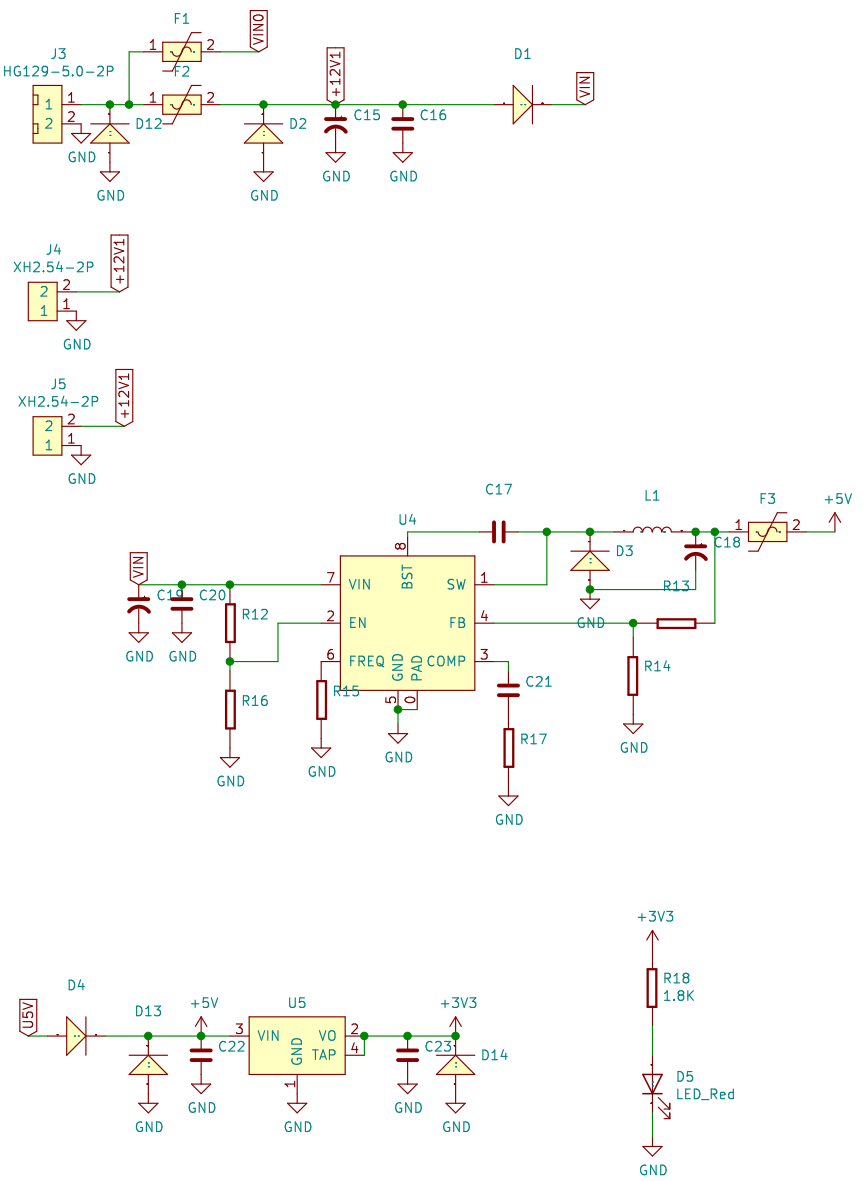


Github : https://github.com/makerbase-mks
FaceBook : https://www.facebook.com/Makerbase.mks/
**Makerbase**

Sheet: /POWER/
File: POWER.sch

***Title: MKS Robin Nano***

| Size: A4 | Date: 2020-12-31 | **Rev: V3.0_002** |
|---|---|---|
| KiCad E.D.A. kicad (5.1.4)-1 | | Id: 3/11 |

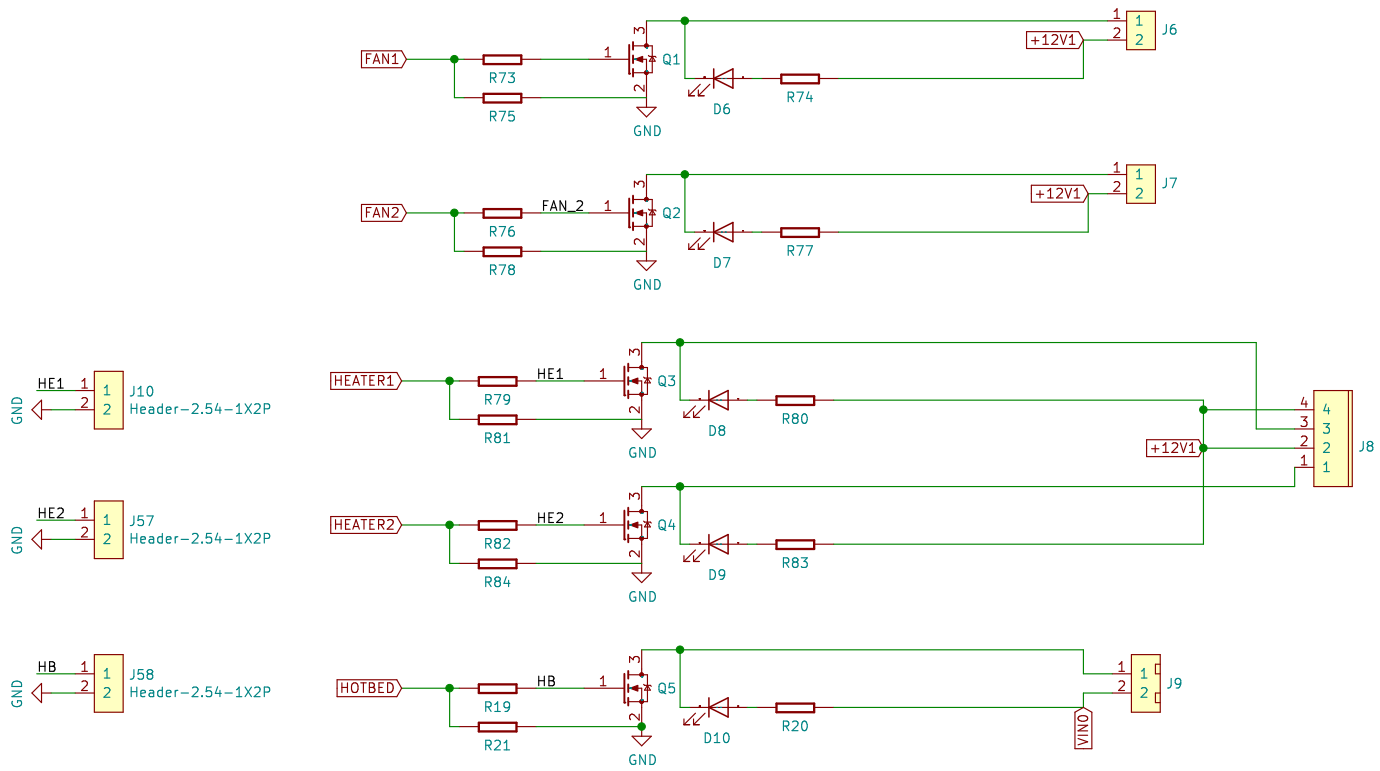


Github : https://github.com/makerbase-mks
FaceBooK : https://www.facebook.com/Makerbase.mks/
**Makerbase**

Sheet: /MOSFET/
File: MOSFET.sch

***Title: MKS Robin Nano***

| Size: A4 | Date: 2020-12-31 | **Rev: V3.0_002** |
|---|---|---|
| KiCad E.D.A. kicad (5.1.4)-1 | | Id: 4/11 |

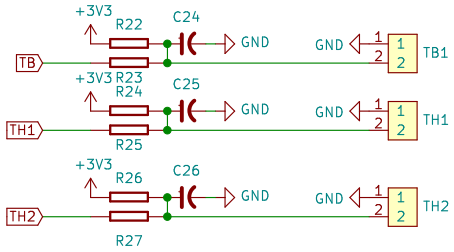


Github : https://github.com/makerbase-mks
FaceBooK : https://www.facebook.com/Makerbase.mks/
**Makerbase**

Sheet: /THM/
File: THM.sch

***Title: MKS Robin Nano***

| Size: A4 | Date: 2020-12-31 | **Rev: V3.0_002** |
|---|---|---|
| KiCad E.D.A. kicad (5.1.4)-1 | | Id: 5/11 |

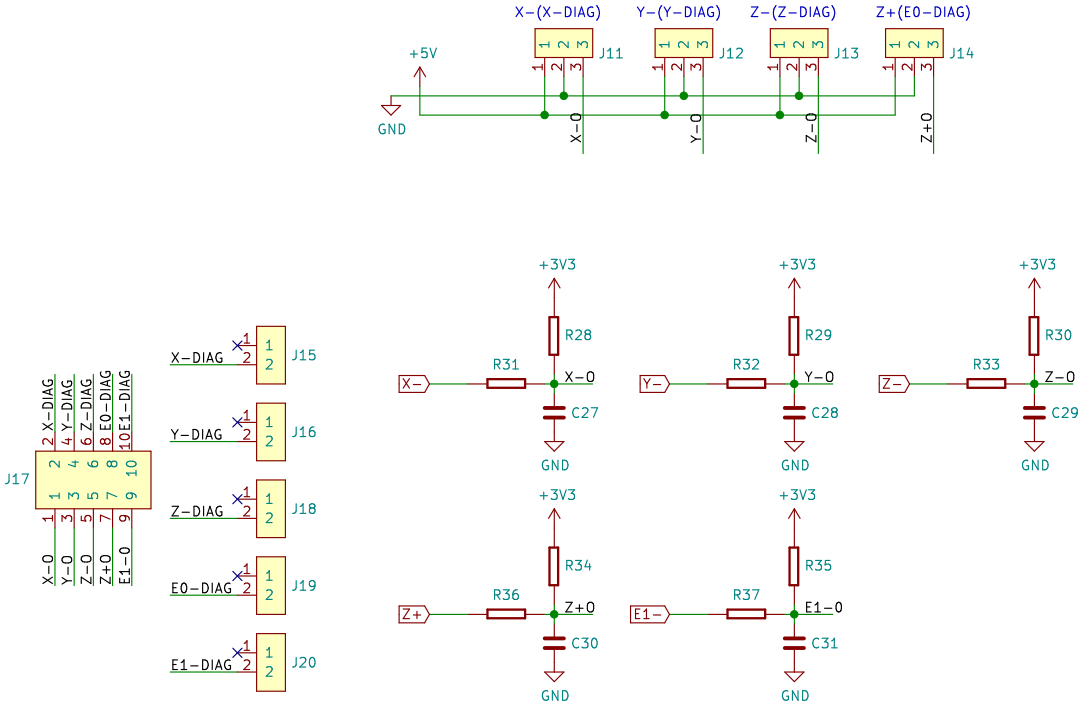


Github : https://github.com/makerbase-mks
FaceBooK : https://www.facebook.com/Makerbase.mks/
**Makerbase**

Sheet: /ENDSTOP/
File: ENDSTOP.sch

**Title: MKS Robin Nano**

| Size: A4 | Date: 2020-12-31 | **Rev: V3.0_002** |
|---|---|---|
| KiCad E.D.A. kicad (5.1.4)-1 | | Id: 6/11 |

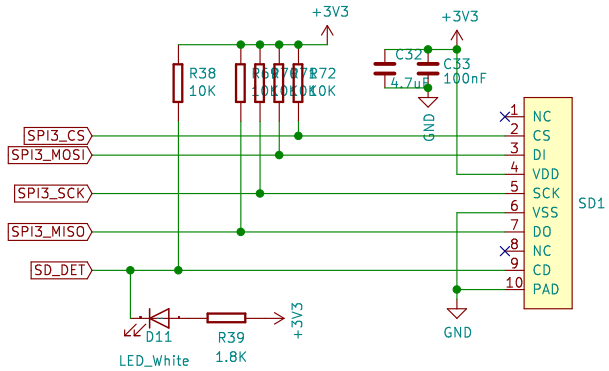


Github : https://github.com/makerbase-mks
FaceBooK : https://www.facebook.com/Makerbase.mks/
**Makerbase**

Sheet: /SD/
File: SD.sch

***Title: MKS Robin Nano***

| Size: A4 | Date: 2020-12-31 | **Rev: V3.0_002** |
|---|---|---|
| KiCad E.D.A. kicad (5.1.4)-1 | | Id: 7/11 |

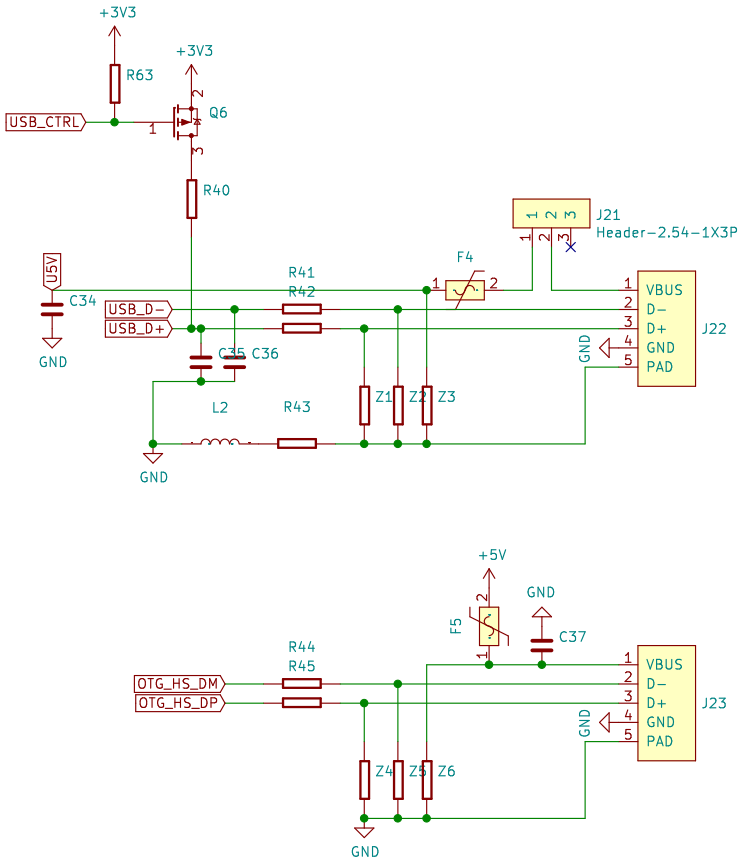


Github : https://github.com/makerbase-mks
FaceBooK : https://www.facebook.com/Makerbase.mks/
**Makerbase**

Sheet: /USB/
File: USB.sch

**Title: MKS Robin Nano**

| Size: A4 | Date: 2020-12-31 | **Rev: V3.0_002** |
|---|---|---|
| KiCad E.D.A. kicad (5.1.4)-1 | | Id: 8/11 |

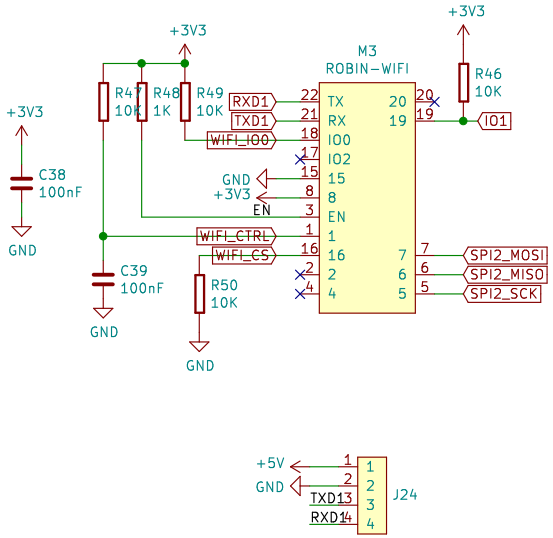


Github : https://github.com/makerbase-mks
FaceBooK : https://www.facebook.com/Makerbase.mks/
**Makerbase**

Sheet: /WIFI/
File: WIFI.sch

***Title: MKS Robin Nano***

| Size: A4 | Date: 2020-12-31 | **Rev: V3.0_002** |
|---|---|---|
| KiCad E.D.A. kicad (5.1.4)-1 | | Id: 9/11 |

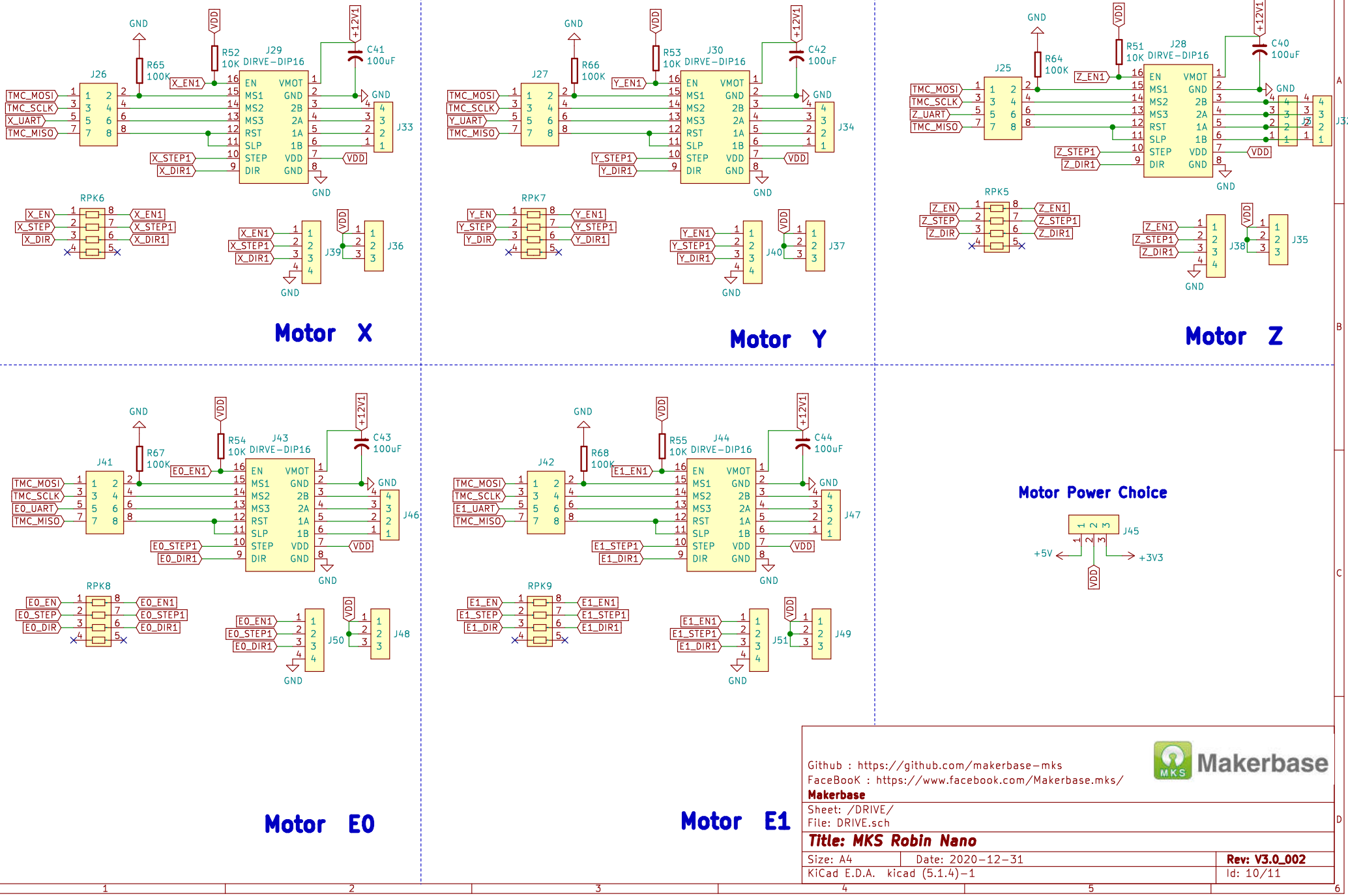


Github : https://github.com/makerbase-mks
FaceBooK : https://www.facebook.com/Makerbase.mks/
**Makerbase**
Sheet: /DRIVE/
File: DRIVE.sch

**Title: MKS Robin Nano**

| | | |
|---|---|---|
| Size: A4 | Date: 2020-12-31 | **Rev: V3.0_002** |
| KiCad E.D.A. kicad (5.1.4)-1 | | Id: 10/11 |

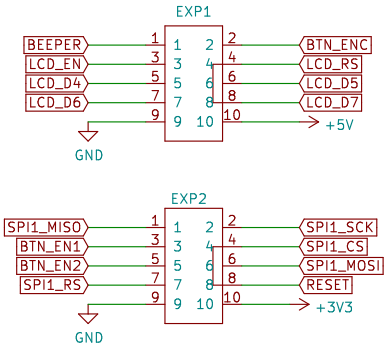


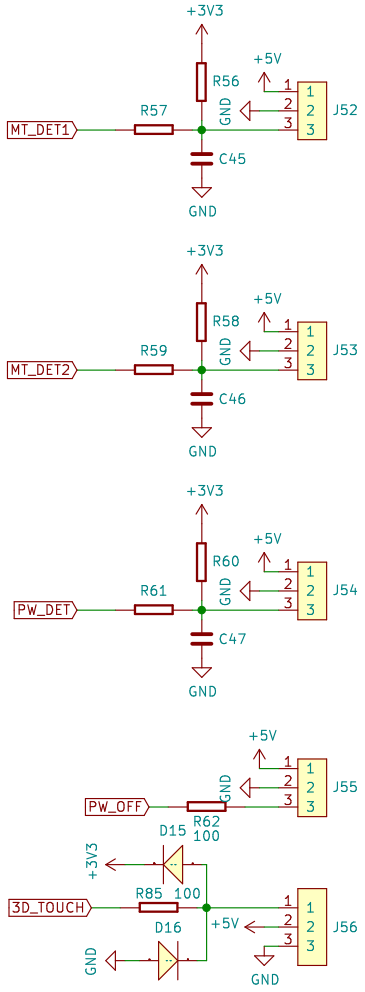


Github : https://github.com/makerbase-mks
FaceBooK : https://www.facebook.com/Makerbase.mks/
**Makerbase**

Sheet: /P-AUX/
File: P-AUX.sch

**Title: MKS Robin Nano**

| Size: A4 | Date: 2020-12-31 | **Rev: V3.0_002** |
|---|---|---|
| KiCad E.D.A. kicad (5.1.4)-1 | | Id: 11/11 |