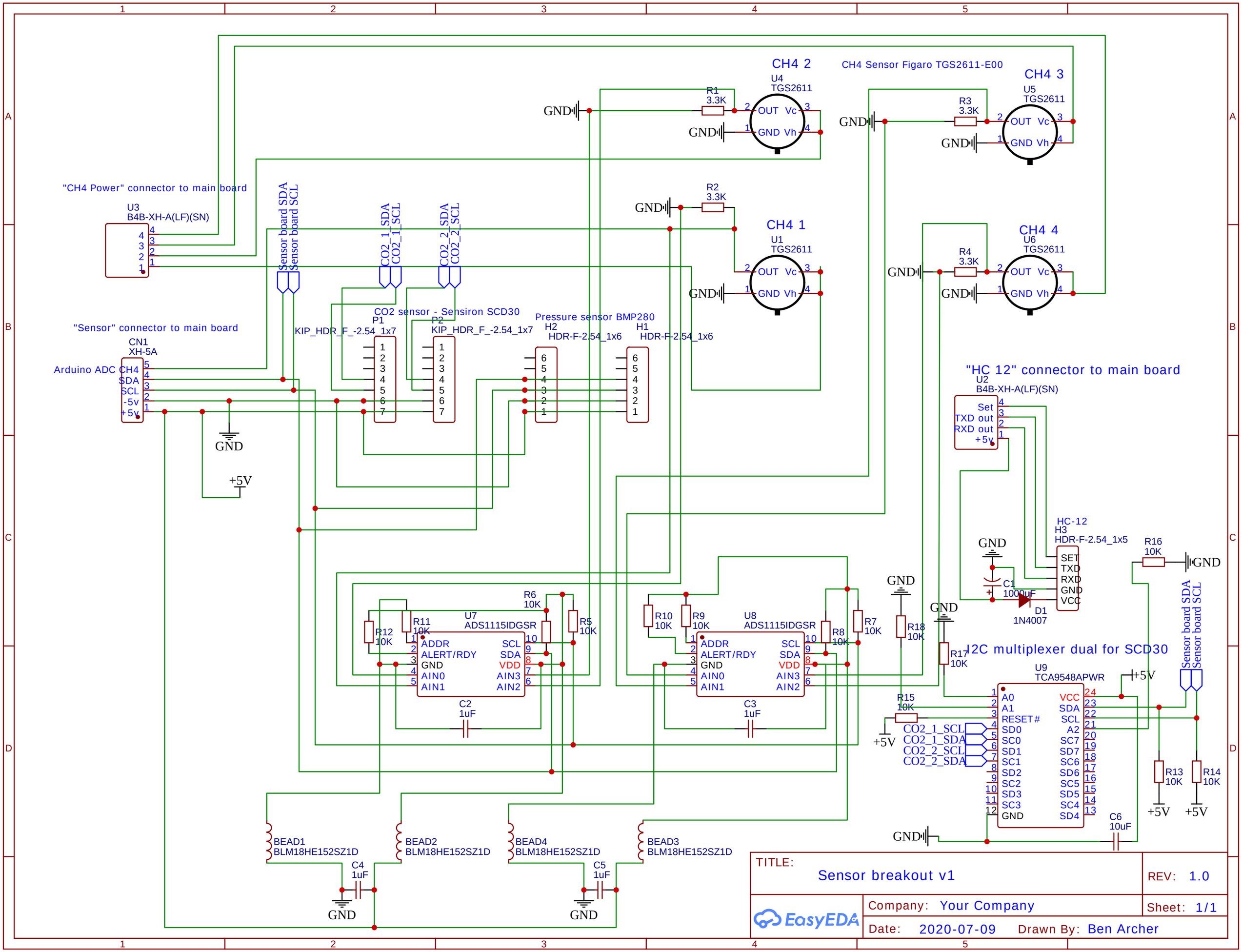
CH4 2
U4
TGS2611
CH4 Sensor Figaro TGS2611-E00
CH4 3
U5
TGS2611
R1
3.3K
R3
3.3K
R2
3.3K
CH4 1
U1
TGS2611
CH4 4
U6
TGS2611
R4
3.3K
"CH4 Power" connector to main board
U3
B4B-XH-A(LF)(SN)
Sensor board SDA
Sensor board SCL
CO2_1_SDA
CO2_1_SCL
CO2_2_SDA
CO2_2_SCL
CO2 sensor - Sensiron SCD30
P1
KIP_HDR_F_-2.54_1x7
P2
KIP_HDR_F_-2.54_1x7
Pressure sensor BMP280
H2
HDR-F-2.54_1x6
H1
HDR-F-2.54_1x6
"Sensor" connector to main board
CN1
XH-5A
Arduino ADC CH4
SDA
SCL
-5v
+5v
GND
+5V
"HC 12" connector to main board
U2
B4B-XH-A(LF)(SN)
Set
TXD out
RXD out
+5v
HC-12
H3
HDR-F-2.54_1x5
SET
TXD
RXD
GND
VCC
C1
1000uF
D1
1N4007
R16
10K
R6
10K
R5
10K
R11
10K
R12
10K
U7
ADS1115IDGSR
ADDR
ALERT/RDY
GND
AIN0
AIN1
SCL
SDA
VDD
AIN3
AIN2
C2
1uF
R10
10K
R9
10K
U8
ADS1115IDGSR
R8
10K
R7
10K
R18
10K
C3
1uF
R17
10K
I2C multiplexer dual for SCD30
U9
TCA9548APWR
A0
A1
RESET#
SD0
SC0
SD1
SC1
SD2
SC2
SD3
SC3
VCC
SDA
SCL
A2
SC7
SD7
SC6
SD6
SC5
SD5
SC4
SD4
R15
10K
CO2_1_SCL
CO2_1_SDA
CO2_2_SCL
CO2_2_SDA
R13
10K
R14
10K
C6
10uF
BEAD1
BLM18HE152SZ1D
BEAD2
BLM18HE152SZ1D
BEAD4
BLM18HE152SZ1D
BEAD3
BLM18HE152SZ1D
C4
1uF
C5
1uF
TITLE:
Sensor breakout v1
REV: 1.0
Company: Your Company
Sheet: 1/1
Date: 2020-07-09
Drawn By: Ben Archer
EasyEDA