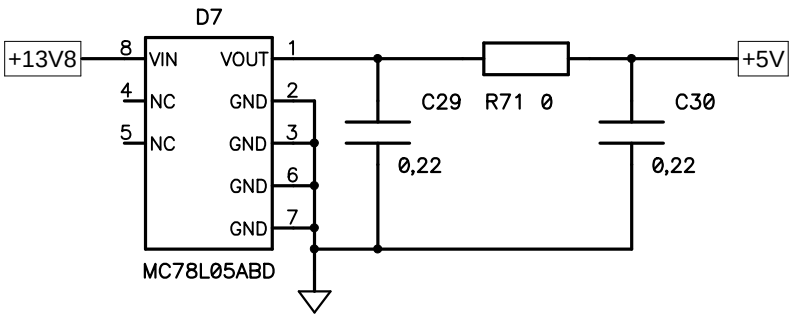
D7
+13V8
8
VIN
VOUT
1
+5V
4
NC
GND
2
C29
R71
0
C30
5
NC
GND
3
0,22
0,22
GND
6
GND
7
MC78L05ABD

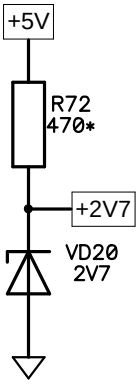
+5V
R72
470*
+2V7
VD20
2V7

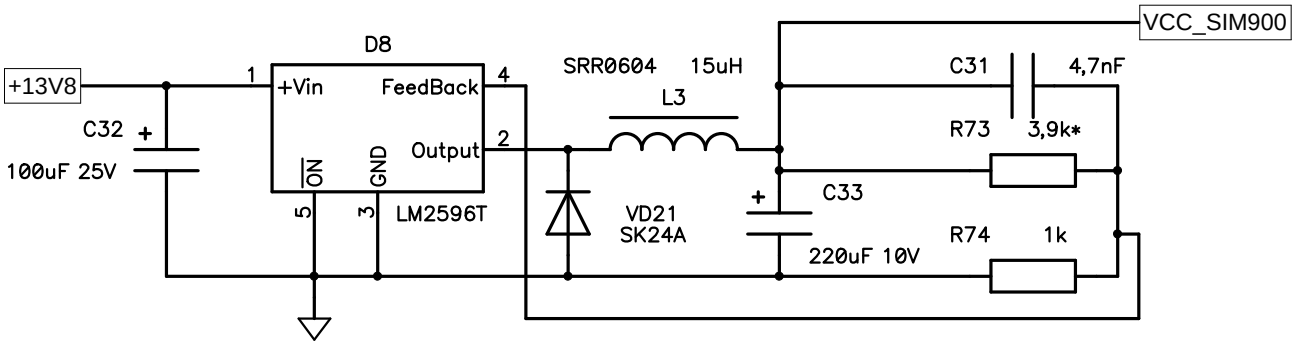
VCC_SIM900
D8
+13V8
1
+Vin
FeedBack
4
SRR0604
15uH
L3
C31
4,7nF
C32
2
R73
3,9k*
100uF 25V
Output
ON
GND
5
3
LM2596T
VD21
SK24A
C33
R74
1k
220uF 10V

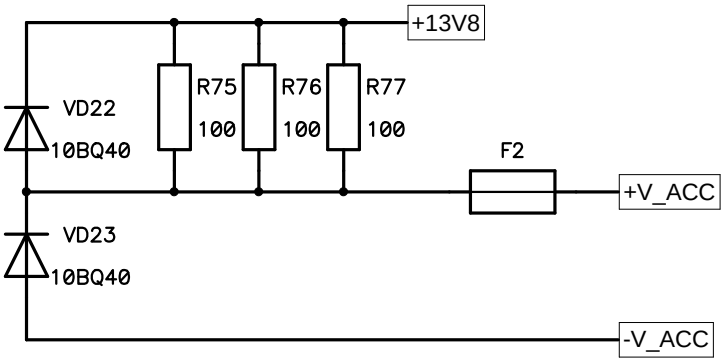
+13V8
VD22
10BQ40
R75
100
R76
100
R77
100
F2
+V_ACC
VD23
10BQ40
-V_ACC