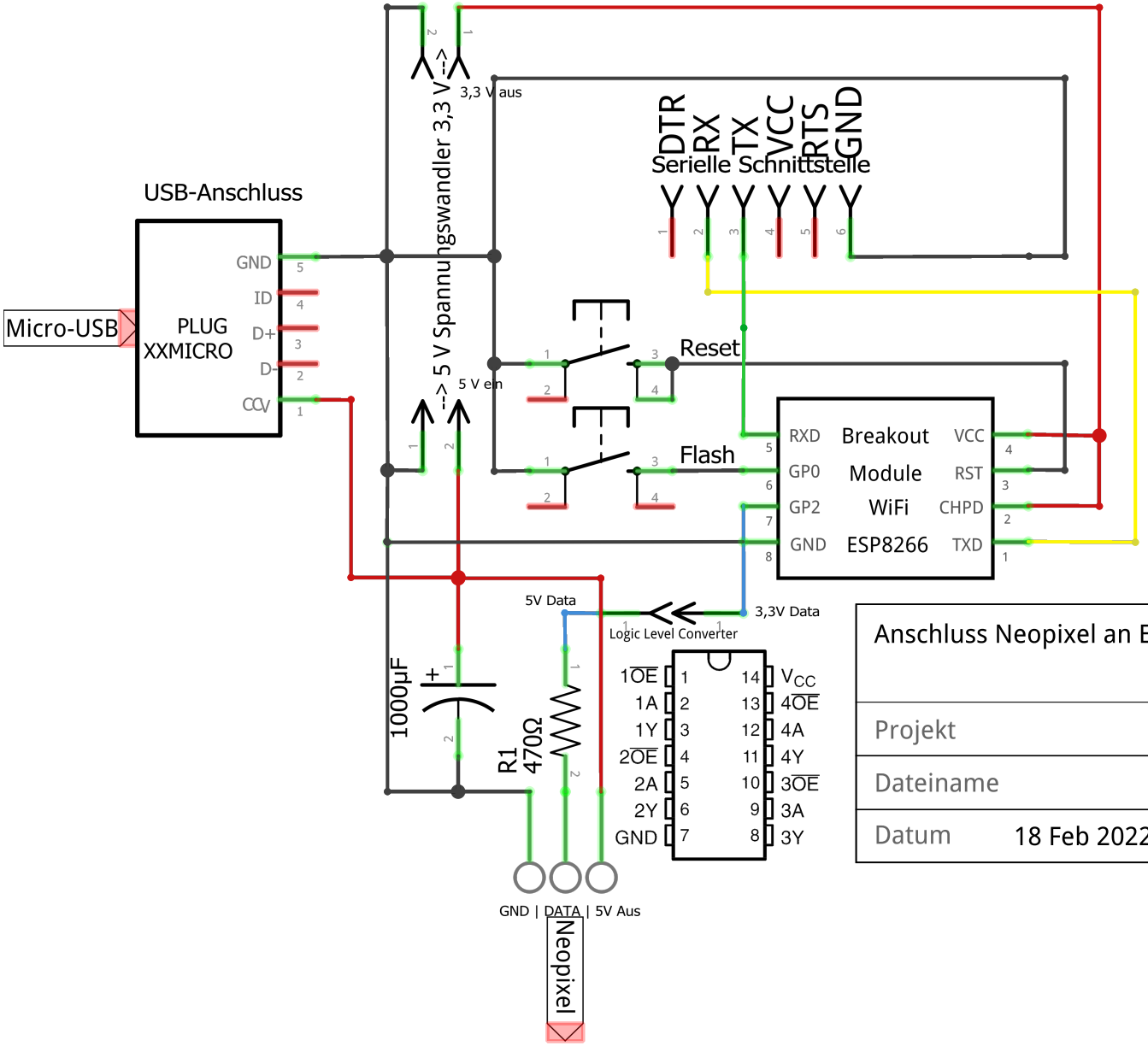


| | | | |
|---|---|---|---|
| Anschluss Neopixel an ESP 8266 | | | |
| Projekt | | | |
| Dateiname | | Revision | 1.0 |
| Datum | 18 Feb 2022 00:01:00 | Blatt | 1/1 |

fritzing