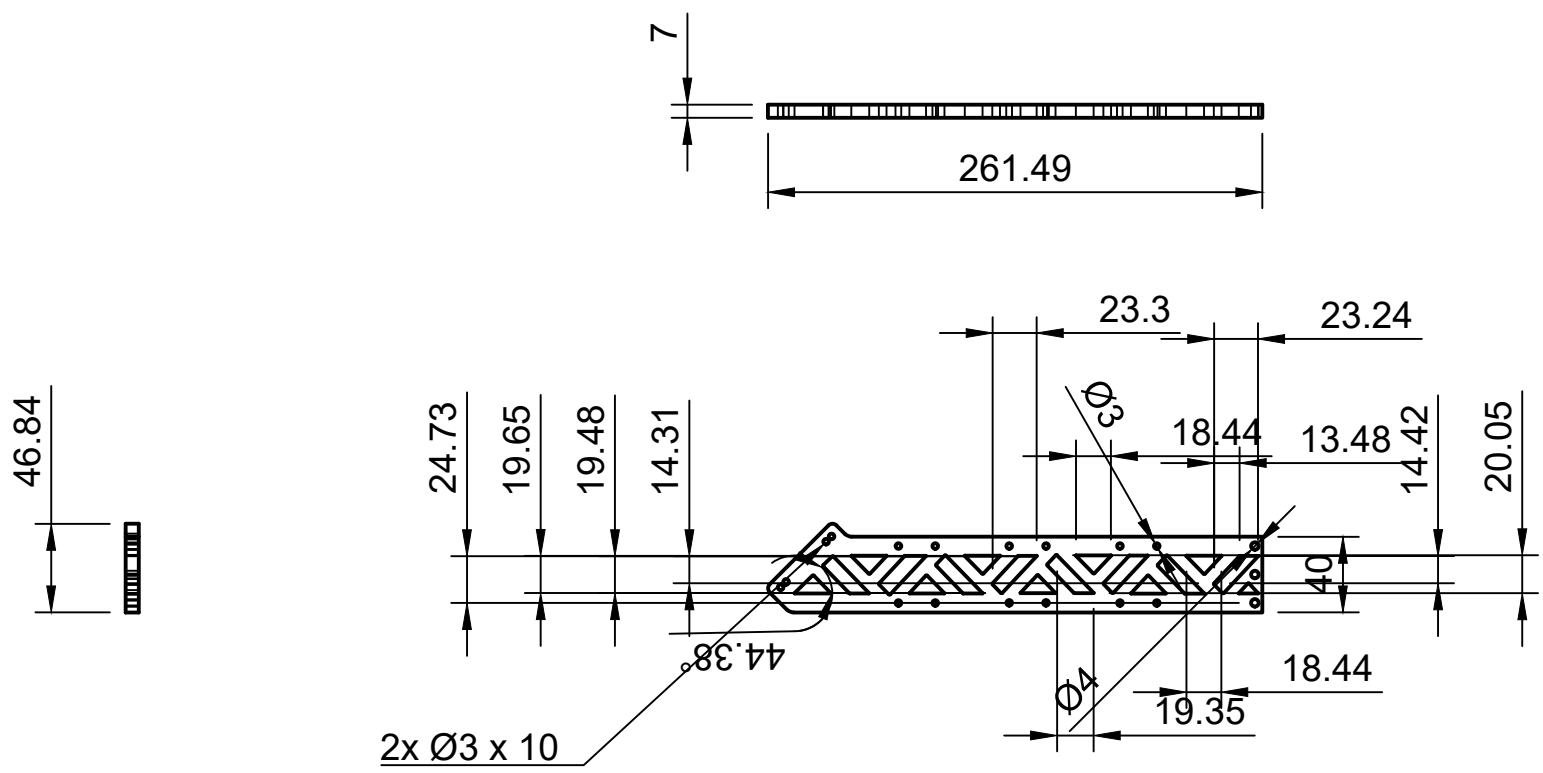

Dept.	Technical reference	Created by 승겸 김 2025-08-14	Approved by
		Document type	Document status
		Title 찐 찐	DWG No.
			Rev. / Date of issue / Sheet 1/1