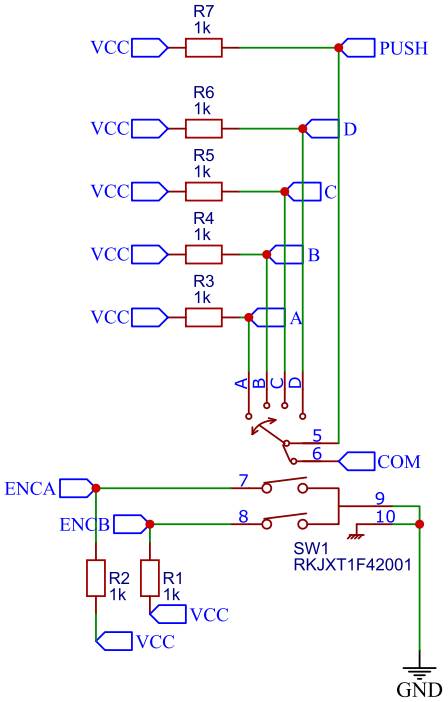

NOTES:

1: Push is activated when A, B, C, or D is activated.
When using SimHub button matrixes, always connect push to the first row.
2: Rotary Encoder is a half-step encoder.
3: Reference code for this switch can be found at: https://github.com/darjusp/test
4: M3x10 Standoff can be used to mount to the underside of a faceplate.
5: COM is connected to GND for direct button presses, or can be connected to a dInput for button matrixes.

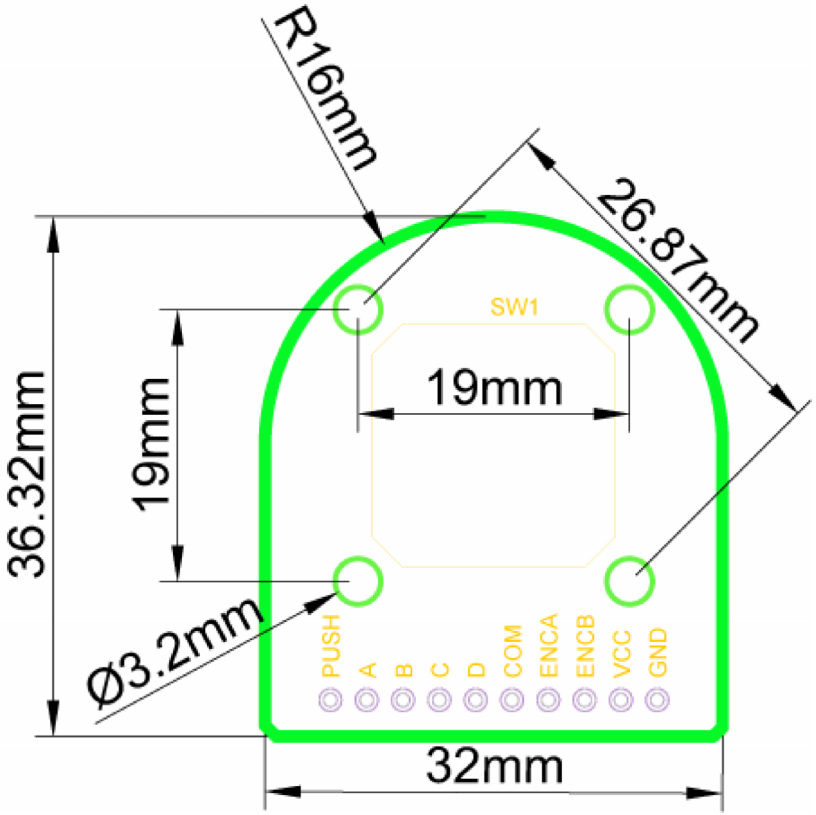

TITLE: 7-Way Multi-Directional Switch		REV: 1.0
BCD SIM	Company: BCD Simulation	Sheet: 1/1
	Date: 2023-06-30 Drawn By: KIM	