MP331

K-band Ranging Motion Detector

Datasheet

Description

Agil*Sense* MP331 is a K-band motion detector with ranging and direction discrimination capabilities. This motion detector is designed and built-in with signal processing to provide the range, speed and direction information of a moving target through the UART communication protocol.

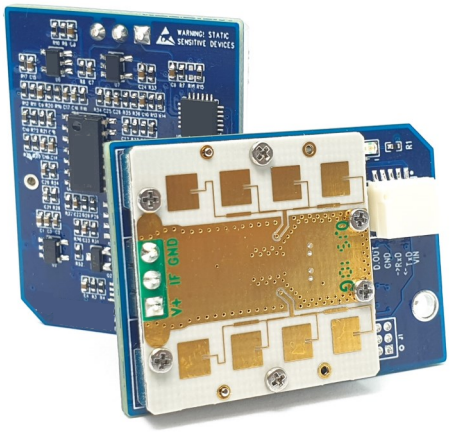

Note 1: MP331 comes with an AP96–3 miniature K-band microwave sensor module.

Note 2: **CAUTION! ELECTROSTATIC SENSITIVE DEVICE**. Observe precautions for handling and storage.

Block Diagram

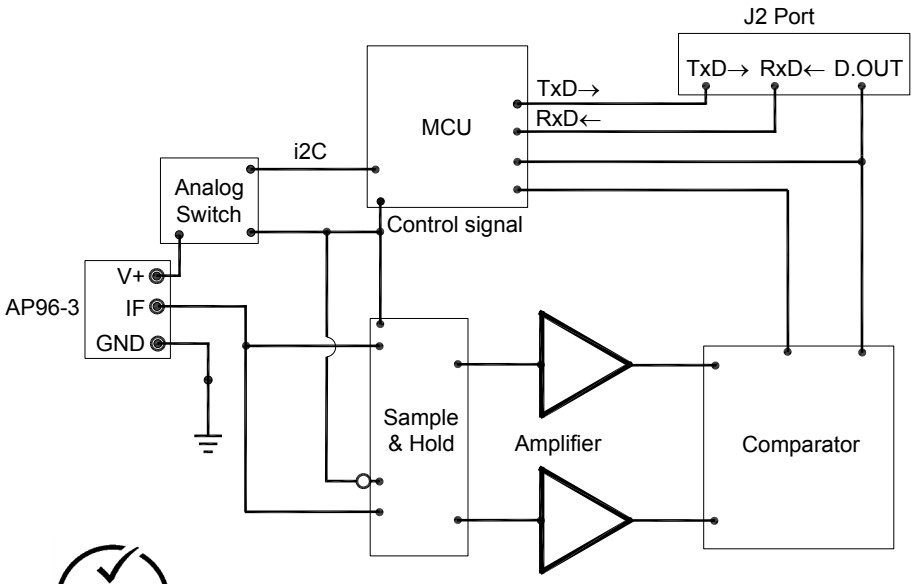

Applications

- Automatic door control
- Lighting control
- Security alarm
- Home automation
- Robotics

Key Features

- Low current consumption
- Small and flat profile
- Motion detection
- Speed detection
- Ranging
- Directional discrimination
- Digital signal output
- UART Communication Protocol

RoHS COMPLIANT

On-board Connectors and Indicators

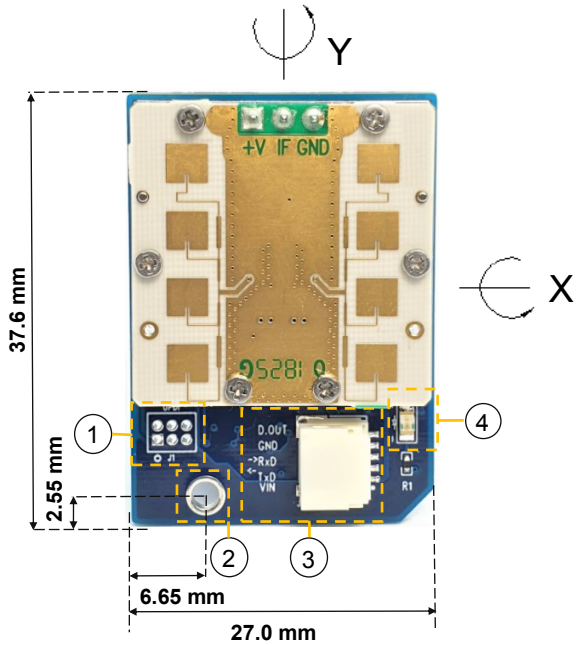

Label	Description	Functions
1	6 positions, 2 rows, 1.27×1.27	Programming interface
2	Ø2.5 mm PCB mounting holes	Mounting hole to attach PCB to an
3	5 contacts, 1 row, 1.00 mm pitch header[1]	Digital output, UART interface and power supply **D.OUT** – Digital IF Output **GND** – Ground **RxD** – N/A (reserved) **TxD** – UART TXD **VIN** – +5VDC power supply
4	LED	LED to indicate on/off status of the

[1]*Mating receptacle for header: NSHR-05V-S from JST (JAPAN SOLDERLESS TERMINALS).*

Technical Specifications

Unless noted otherwise, the specifications are measured at +25°C.

Parameter	Remarks	Min	Typical	Max	Units
Sensor Performance					
Transmitting frequency			24.125		GHz
Transmitter output power			15		dBm
Operating range		500		5000	mm
Accuracy			500		mm
Field of view (3 dB)	X/Y		32/80		°
Detectable velocity		100		2400	mm/s
IF-Amplifier					
Gain	Fixed		70		dB
Bandwidth			15 - 300		Hz
Interfaces					
Supported interface	UART				
Supported connector	5 Pin GPIO/JST				
Mechanical					
Dimensions			37.6×27.0×8.5		mm
Weight	Without cable		6.6		g
General					
Supply voltage, VIN		4.75	5	5.25	V_{DC}
Current consumption	Includes AP96-3		50		mA
Operating temperature		-15		55	°C

ST Engineering Electronics Ltd.

1 Ang Mo Kio Electronics Park Road, #06-02, ST Engineering Hub, Singapore 567710

Tel: (65) 6521 7888 Fax: (65) 6521 7801

Website: www.agilsense.com (Regn. No.: 199103901W)

Communication Protocol

- Standard UART
- Baud rate: 115,200 bps
- Data length: 8 bits, 1 start bit, 1 stop bit and no parity bits

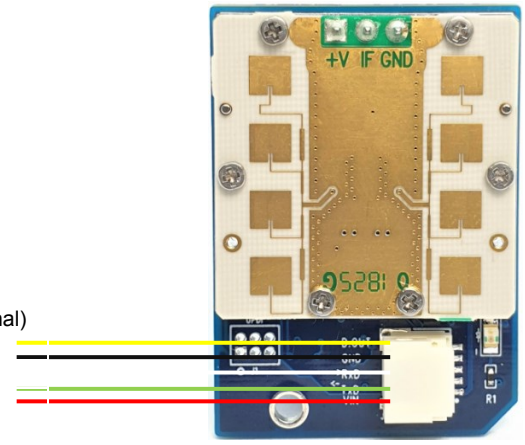

D.OUT – Digital IF Output (optional)
GND – Ground
RxD – N/A (reserved)
TxD – UART TXD
VIN – +5VDC power supply

Data Format for Serial Transmission Interface

Each output data packet consists of 7 bytes. Details of the packet structure is shown in the table below.

Output Data Format		
Byte 1	0xFE	Packet header
Byte 2	0x1	Version ID
Byte 3	0xXX	Distance (MSB)
Byte 4	0xXX	Distance (LSB)
Byte 5	0xXX	Velocity (MSB)
Byte 6	0xXX	Velocity (LSB)
Byte 7	0x0X	Direction

Distance:

Bytes 3 and 4 output the distance in mm, in hexadecimal format. For example, for a target distance of 2,250 mm, bytes 3 and 4 would be 0x08 and 0xCA respectively.

Velocity:

Bytes 5 and 6 output the velocity in mm/s, in hexadecimal format. For example, for a target velocity of 2,250 mm/s, bytes 5 and 6 would be 0x08 and 0xCA respectively.

Direction:

Byte 7 outputs direction information. For example, 0x01 indicates that the target is approaching the sensor and 0x00 indicates that it is receding.

Note:

When no moving target is detected, 0xFF will be output to bytes 3 to 7 of the data packet.

ST Engineering Electronics Ltd.
1 Ang Mo Kio Electronics Park Road, #06-02, ST Engineering Hub, Singapore 567710
Tel: (65) 6521 7888 Fax: (65) 6521 7801
Website: www.agilsense.com (Regn. No.: 199103901W)