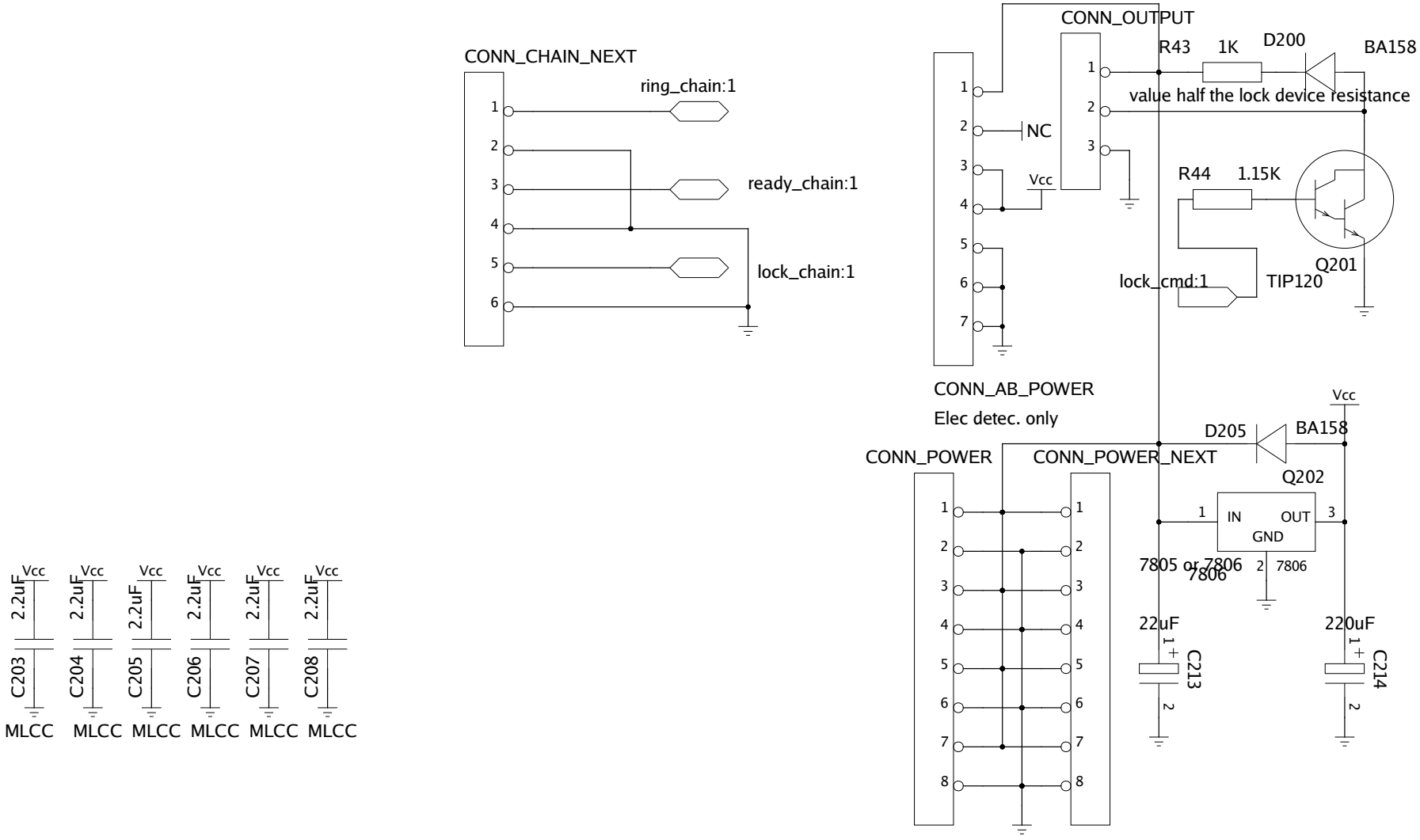

TITLE	
FILE:	REVISION:
PAGE OF	DRAWN BY: