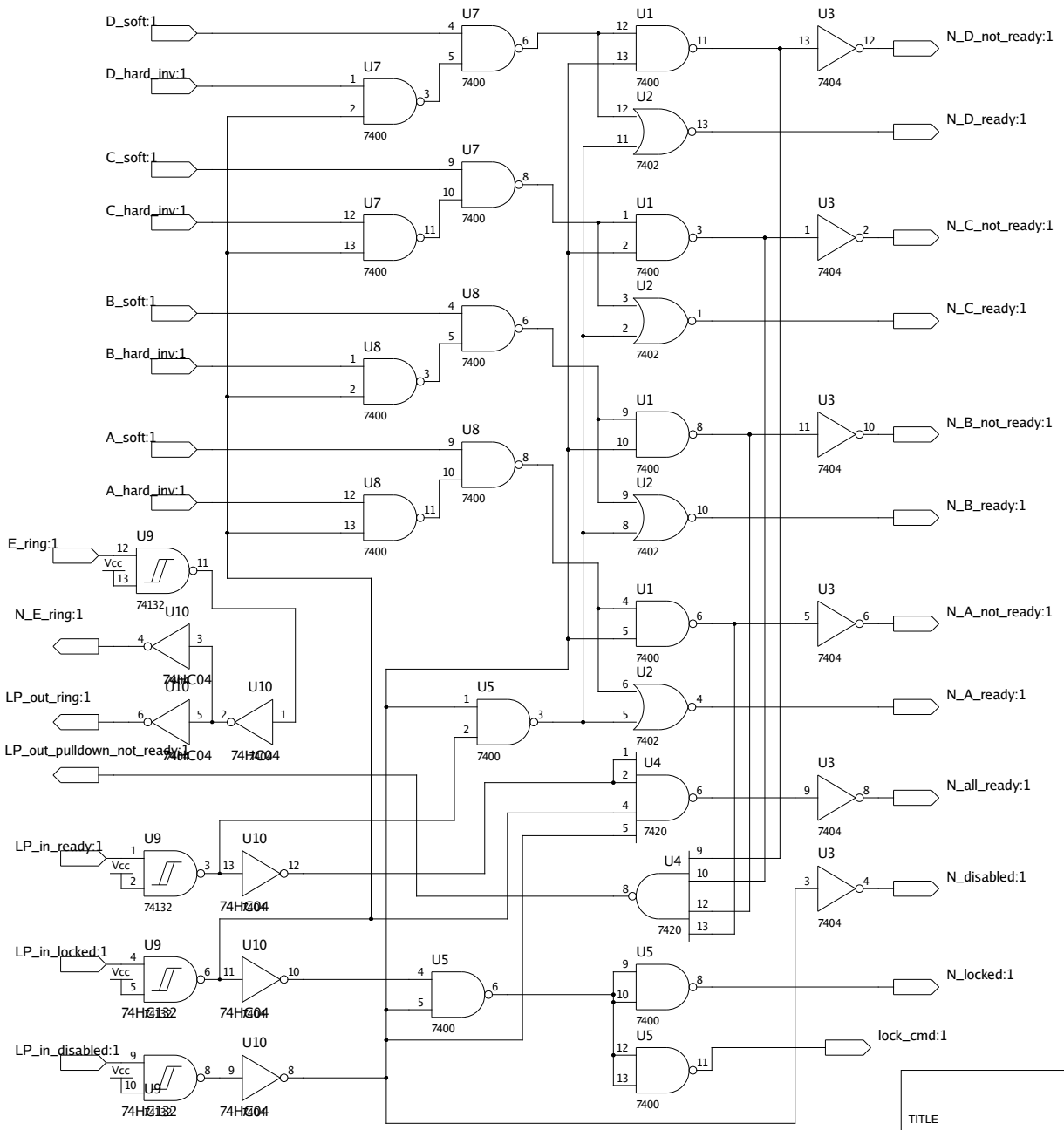

TITLE

FILE:

PAGE OF

REVISION:

DRAWN BY: