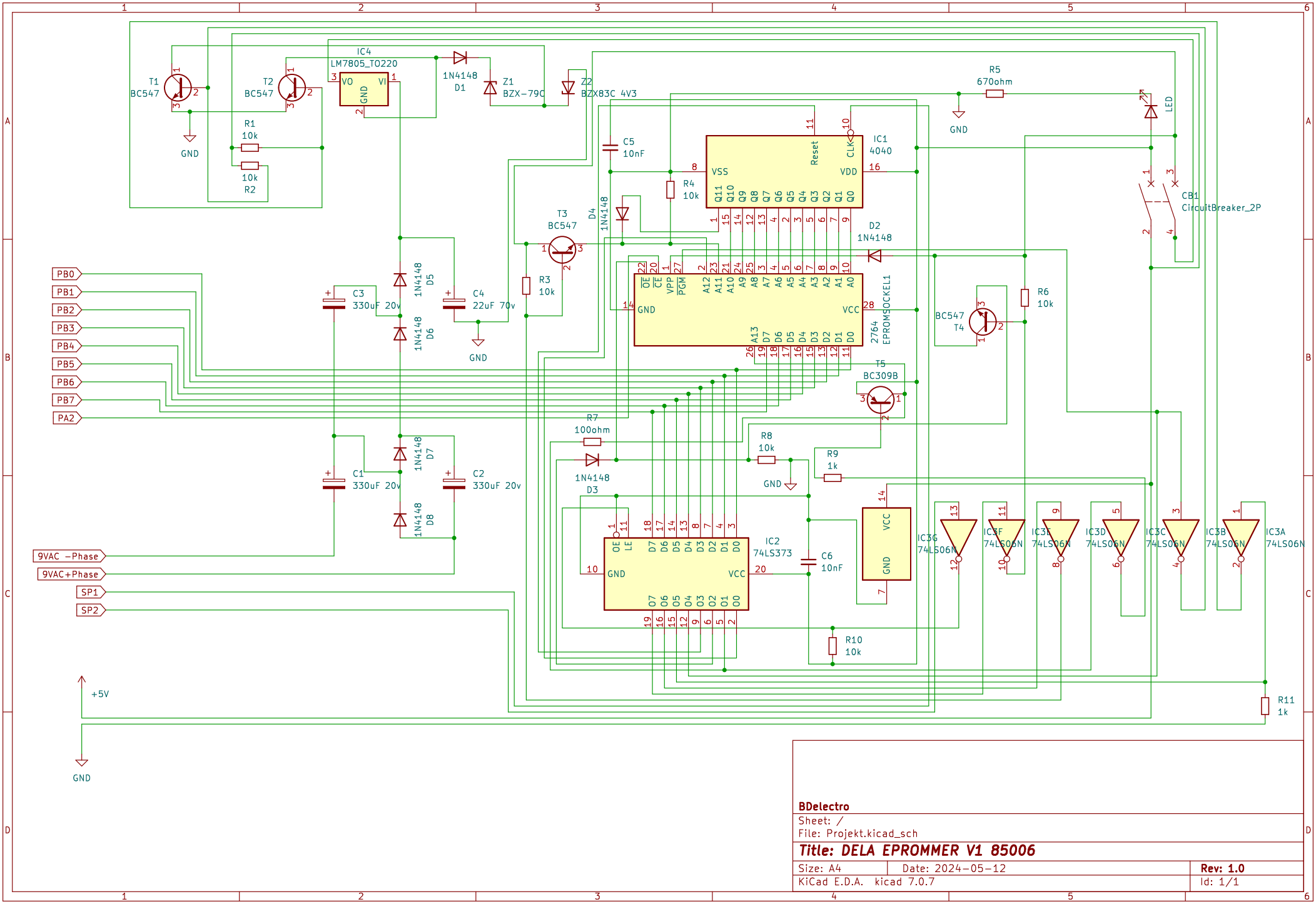

BDelectro

Sheet: /

File: Projekt.kicad_sch

Title: DELA EPROMMER V1 85006

Size: A4	Date: 2024-05-12	**Rev: 1.0**
KiCad E.D.A. kicad 7.0.7		Id: 1/1