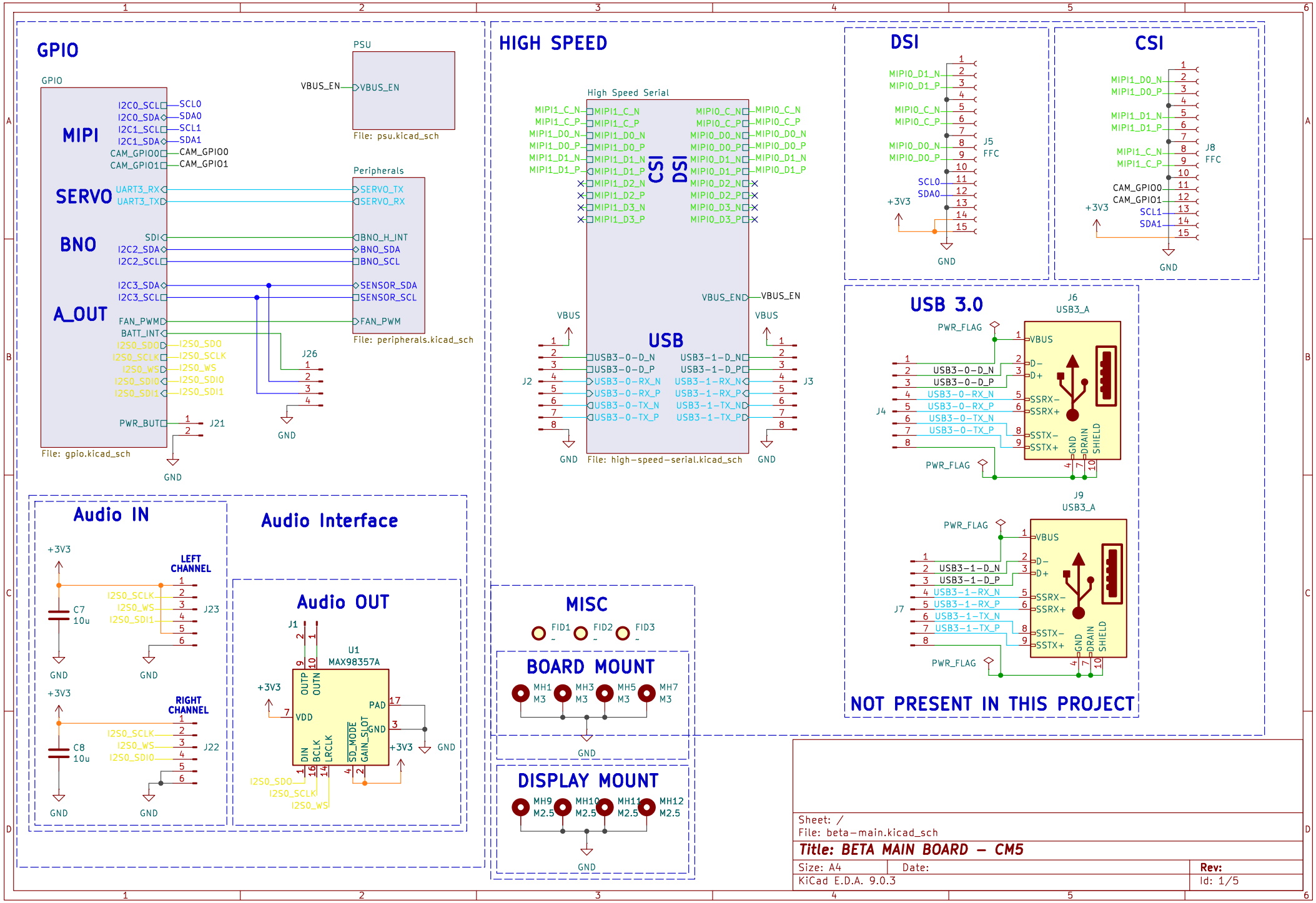
GPIO
MIPI
SERVO
BNO
A_OUT
File: gpio.kicad_sch
PSU
File: psu.kicad_sch
Peripherals
File: peripherals.kicad_sch
HIGH SPEED
High Speed Serial
CSI
DSI
USB
File: high-speed-serial.kicad_sch
DSI
J5
FFC
CSI
J8
FFC
USB 3.0
J6
USB3_A
J9
USB3_A
J4
J7
NOT PRESENT IN THIS PROJECT
Audio IN
LEFT CHANNEL
RIGHT CHANNEL
J23
J22
Audio Interface
Audio OUT
U1
MAX98357A
J1
J26
J21
J2
J3
MISC
FID1
FID2
FID3
BOARD MOUNT
MH1 M3
MH3 M3
MH5 M3
MH7 M3
DISPLAY MOUNT
MH9 M2.5
MH10 M2.5
MH11 M2.5
MH12 M2.5
Sheet: /
File: beta-main.kicad_sch
Title: BETA MAIN BOARD - CM5
Size: A4
Date:
Rev:
KiCad E.D.A. 9.0.3
Id: 1/5

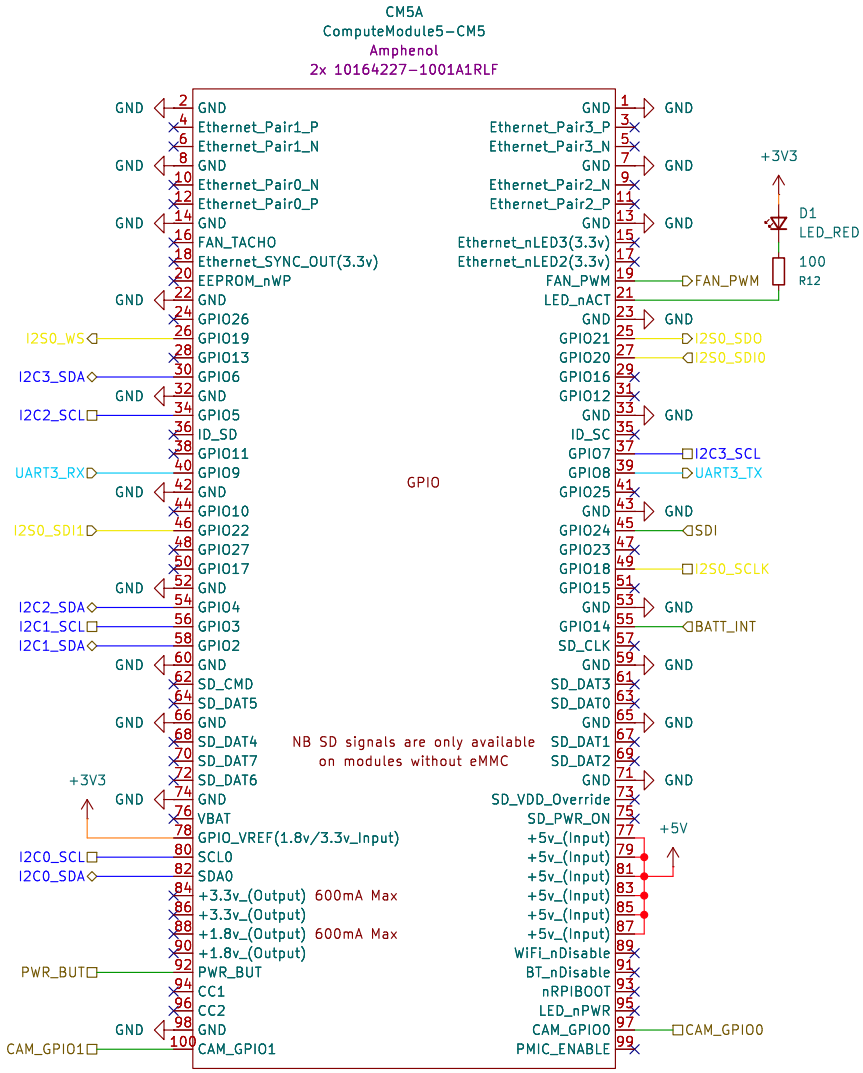

I2S0

I2C0
I2C1
I2C2

UART3

Sheet: /GPIO/
File: gpio.kicad_sch

Title: BETA MAIN BOARD – CM5 – GPIO

Size: A4	Date:	Rev:
KiCad E.D.A. 9.0.3		Id: 2/5

BATTERY PACK – POWER SOURCE

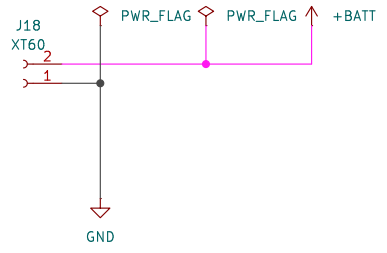

5V

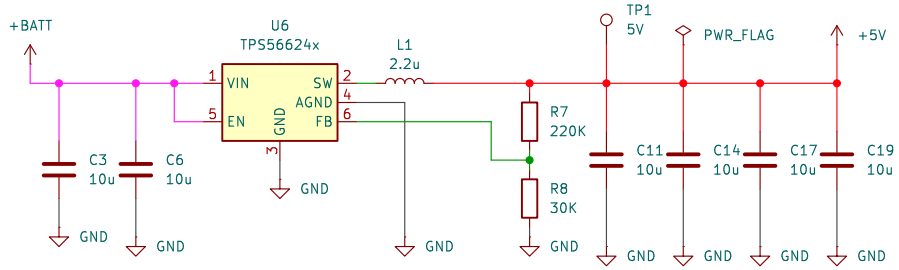

3.3V

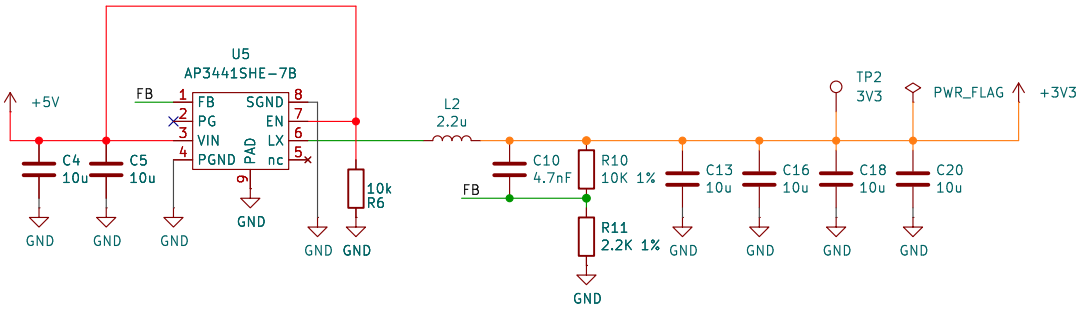

VBUS CURRENT LIMIT SWITCH

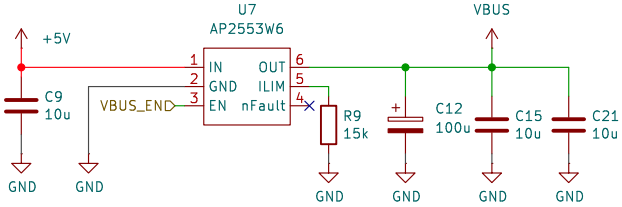

Sheet: /PSU/
File: psu.kicad_sch

Title: BETA MAIN BOARD – POWER SUPPLY

Size: A4	Date:	Rev:
KiCad E.D.A. 9.0.3		Id: 6/5

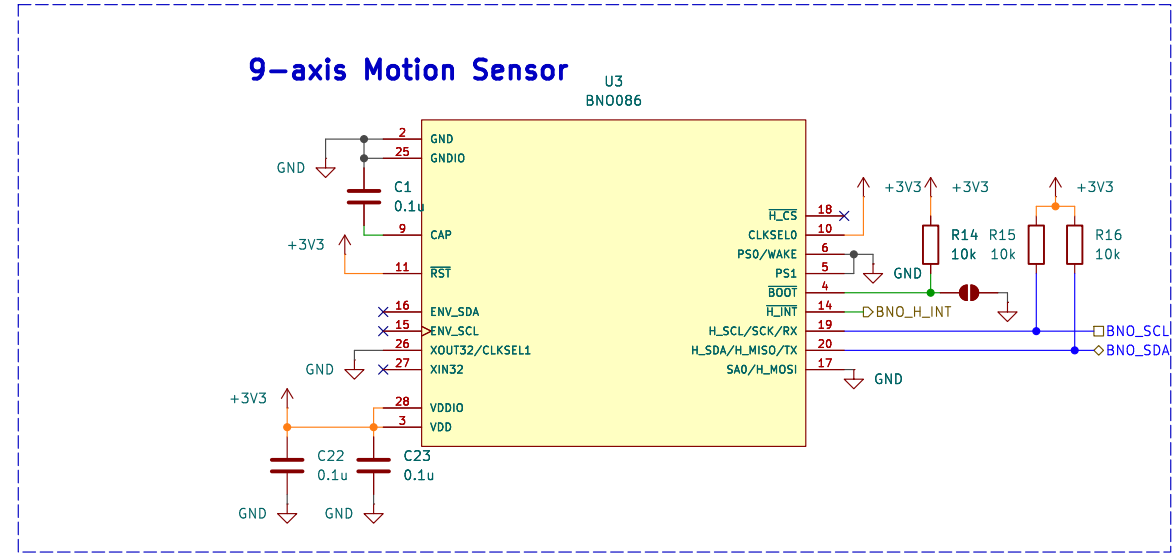

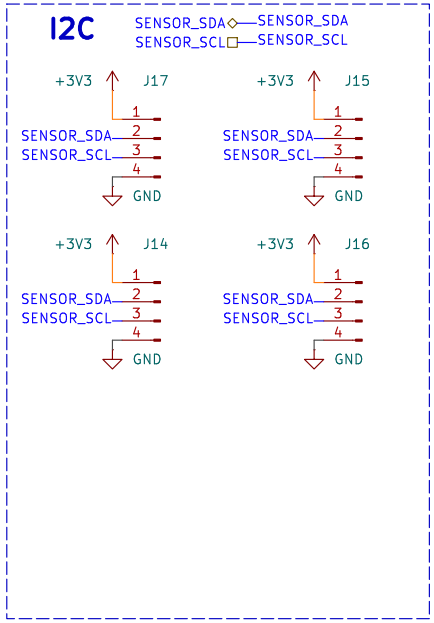

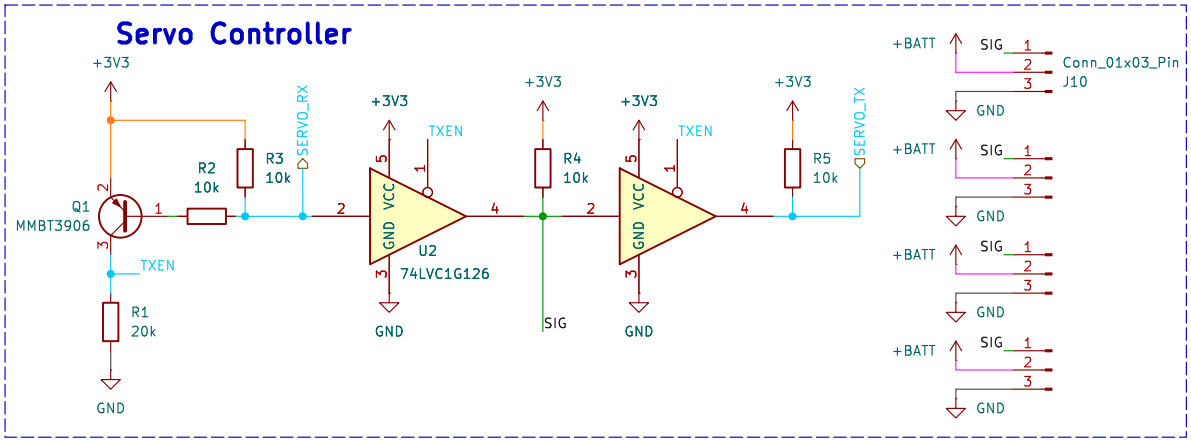

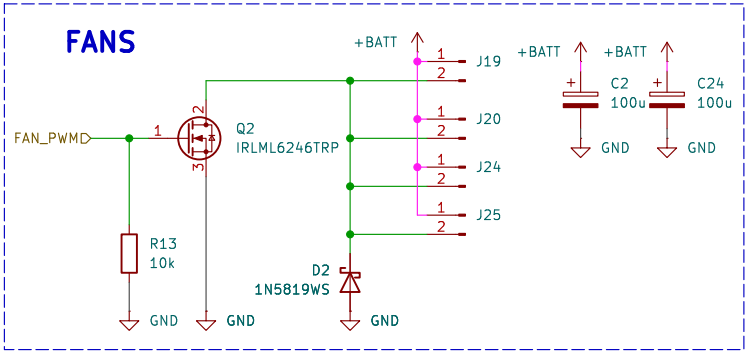

Sheet: /Peripherals/
File: peripherals.kicad_sch

Title:

Size: A4	Date:	Rev:
KiCad E.D.A. 9.0.3		Id: 4/5

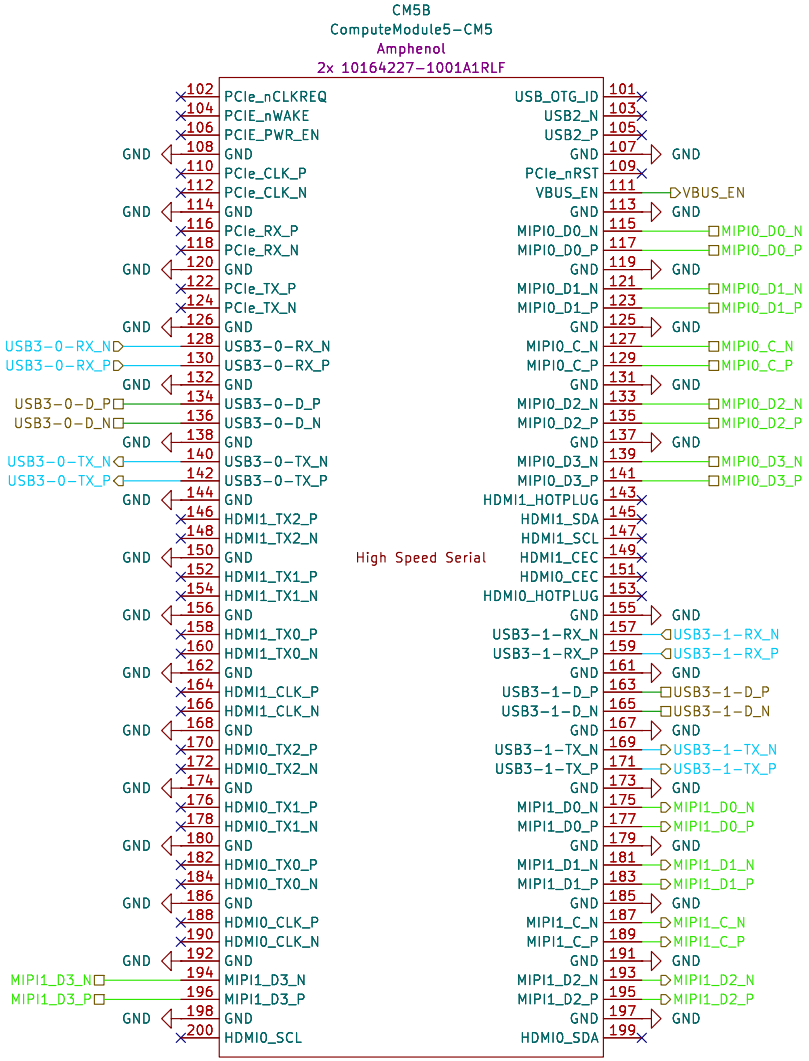

Sheet: /High Speed Serial/
File: high-speed-serial.kicad_sch

Title: BETA MAIN BOARD – CM5 – High Speed Interface

Size: A4	Date:	Rev:
KiCad E.D.A. 9.0.3		Id: 3/5