ST75256

4 Level Gray Scale Dot Matrix LCD Controller/Driver

Datasheet

Sitronix reserves the right to change the contents in this document without prior notice, please contact Sitronix to obtain the latest version of datasheet before placing your order. No responsibility is assumed by Sitronix for any infringement of patent or other rights of third parties which may result from its use.
© 2013 Sitronix Technology Corporation. All rights reserved.

Version 1.6

Sitronix Technology Corporation

LIST OF CONTENT

1 INTRODUCTION 1

2 FEATURES 1

3 PAD ARRANGEMENT 2

4 PAD CENTER COORDINATES 3

5 BLOCK DIAGRAM 11

6 PIN DESCRIPTION 12

6.1 POWER SUPPLY PINS 12
6.2 DRIVER OUTPUT PINS 14
6.3 CLOCK SYSTEM INPUT 15
6.4 INTERFACE LOGIC PINS 16
6.5 MASTER/SLAVE PINS 18
6.6 OTP PINS 19
6.7 TEST PINS 19
6.8 ITO RESISTANCE LIMITATION 19
6.9 ITO LAYOUT GUIDE 20
6.10 ITO LAYOUT REFERENCE 21
6.11 FOR VPP 23
6.12 ENHANCE ESD PERFORMANCE FOR COG APPLICATION 23

7 FUNCTION DESCRIPTION 24

7.1 MICROPROCESSOR INTERFACE 24
7.1.1 Chip Select Input 24
7.1.2 Parallel / Serial Interface 24
7.1.3 Parallel Interface 24
7.1.4 Setting Serial Interface 25
7.1.5 4-Line Serial Interface 25
7.1.6 3-Line Serial Interface 26
7.1.7 I^2C Interface 27
7.2 DATA TRANSFER 31
7.3 DISPLAY DATA RAM (DDRAM) 32
7.3.1 Page Address Circuit 34
7.3.2 Column Address Circuit 34
7.3.3 I/O Buffer Circuit 34
7.3.4 Display Data Latch Circuit 34

Sitronix Confidential The information contained herein is the exclusive property of Sitronix and shall not be distributed, reproduced, or disclosed in whole or in part without prior written permission of Sitronix.

7.3.5 Data Orientation 35
7.3.6 DDRAM Map to LCD Driver Output 37
7.3.7 Set ICON 41
7.3.8 Partial Display 42
7.3.9 Area Scroll Display 42
7.3.10 Partial Display Application with COMSCN 43
7.4 LIQUID CRYSTAL DRIVER POWER CIRCUIT 44
7.4.1 External Component of Power Circuit 44
7.4.2 Voltage Regulator Circuits 45
7.5 TEMPERATURE GRADIENT SELECTION CIRCUIT 47
7.5.1 SET V0 with temperature compensation (Temperature ≠ 24℃) 47
7.6 FREQUENCY TEMPERATURE GRADIENT COMPENSATION COEFFICIENT 49
7.6.1 Register Loading Detection 49
8 RESET CIRCUIT 50
9 COMMAND 52
9.1 INSTRUCTION TABLE 52
9.2 INSTRUCTION DESCRIPTION 56
9.2.1 Extension Command 56
9.2.2 Display ON/OFF 56
9.2.3 Inverse Display 56
9.2.4 All Pixel ON/OFF 56
9.2.5 Display Control 57
9.2.6 Power Save 58
9.2.7 Set Page Address 58
9.2.8 Set Column Address 58
9.2.9 Data Scan Direction 59
9.2.10 Write Data 61
9.2.11 Read Data 61
9.2.12 Partial In 61
9.2.13 Partial Out 62
9.2.14 Read /Modify/Write In 62
9.2.15 Read /Modify/Write Out 63
9.2.16 Scroll Area 63
9.2.17 Scroll Start Address Set 64
9.2.18 OSC ON 65
9.2.19 OSC OFF 65

Sitronix Confidential The information contained herein is the exclusive property of Sitronix and shall not be distributed, reproduced, or disclosed in whole or in part without prior written permission of Sitronix.

9.2.20 Power Control 65
9.2.21 Set Vop 66
9.2.22 Vop Control 66
9.2.23 Read Register Mode 67
9.2.24 NOP 67
9.2.25 Read Status (Parallel and I^2C) 67
9.2.26 Read Status (4-Line and 3-Line SPI) 68
9.2.27 Data Format Select 68
9.2.28 Display Mode 68
9.2.29 Set ICON 69
9.2.30 Set Master/Slave 69
9.2.31 Set Gray Level 70
9.2.32 Analog Circuit Set 71
9.2.33 Booster Level 71
9.2.34 Driving Select 72
9.2.35 Auto Read Control 72
9.2.36 OTP WR/RD Control 72
9.2.37 OTP Control Out 72
9.2.38 OTP Write 72
9.2.39 OTP Read 73
9.2.40 OTP Selection Control 73
9.2.41 OTP Programming Setting 73
9.2.42 Frame Rate 74
9.2.43 Temperature Range 75
9.2.44 Temperature Gradient Compensation 75
9.2.45 Enable OTP 76

10 OPERATION FLOW 77

10.1 POWER ON 77
10.2 POWER OFF 79
10.3 OTP OPERATION 81
10.3.1 Referential OTP Burning Flow 81
10.3.2 Referential OTP Operation Code 82

11 HANDLING 86

12 ABSOLUTE MAXIMUM RATINGS 86

13 DC CHARACTERISTICS 87

Sitronix Confidential The information contained herein is the exclusive property of Sitronix and shall not be distributed, reproduced, or disclosed in whole or in part without prior written permission of Sitronix.

14 AC CHARATERISTIC 89

14.1 SYSTEM BUS TIMING FOR 8080 MCU INTERFACE 89
14.2 SYSTEM BUS TIMING FOR 6800 MCU INTERFACE 90
14.3 SYSTEM BUS TIMING FOR 4-LINE SPI MCU INTERFACE 91
14.4 SYSTEM BUS TIMING FOR 3-LINE SPI MCU INTERFACE 92
14.5 SERIAL INTERFACE (I^2C INTERFACE) 93
14.6 RESET TIMING 94

15 APPLICATION NOTE 95

15.1 APPLICATION CIRCUIT 95
15.1.1 Parallel 8080 Interface 95
15.1.2 Parallel 6800 Interface 96
15.1.3 4-Line SPI Interface 97
15.1.4 3-Line SPI Interface 98
15.1.5 I^2C Interface 99

16 MASTER/SLAVE MODE 100

16.1 CONNECTIONS BETWEEN LCD DRIVERS (REFERENCE EXAMPLE) 100
16.2 REFERENTIAL MASTER/SLAVE OPERATION CODE 103
16.2.1 Referential Initial Code 103
16.2.2 Referential Power OFF Code 106

17 COF PACKAGE 107

18 REVISION HISTORY 108

Sitronix Confidential The information contained herein is the exclusive property of Sitronix and shall not be distributed, reproduced, or disclosed in whole or in part without prior written permission of Sitronix.

LIST OF FIGURES

Figure 1 Chip Outline 2
Figure 2 Block Diagram 11
Figure 3 V0 ITO Layout 20
Figure 4 XV0 ITO Layout 20
Figure 5 VG ITO Layout 20
Figure 6 VSS ITO Layout 20
Figure 7 VDD ITO Layout 20
Figure 8 RSTB ITO Layout 23
Figure 9 Air ESD Protection Ring 23
Figure 10 Write Operation of 4-Line SPI 25
Figure 11 Read Operation of 4-Line SPI 26
Figure 12 Write Operation of 3-Line SPI 26
Figure 13 Read Operation of 3-Line SPI 26
Figure 14 Bit Transfer 27
Figure 15 Definition of START and STOP Condition 27
Figure 16 System Configuration 28
Figure 17 Acknowledgement of I^2C Interface 29
Figure 18 I^2C Interface Protocol 30
Figure 19 Data Transfer: Write 31
Figure 20 Data Transfer: Read 31
Figure 21 DDRAM Mapping (4-Level Gray Scale Mode) 32
Figure 22 DDRAM Mapping (Monochrome Mode) 33
Figure 23 RAM Format and Addressing, if DO=0 (4-Level Gray Scale Mode) 35
Figure 24 RAM Format and Addressing, if DO=1 (4-Level Gray Scale Mode) 35
Figure 25 RAM Format and Addressing, if DO=0 (Monochrome Mode) 36
Figure 26 RAM Format and Addressing, if DO=1 (Monochrome Mode) 36
Figure 27 DDRAM Display Direction (Monochrome Mode; COMSCN=0) 37
Figure 28 DDRAM Display Direction (4-Level Gray Scale Mode; COMSCN=0) 38
Figure 29 DDRAM Display Direction (Monochrome Mode; COMSCN=1) 39
Figure 30 DDRAM Display Direction (4-Level Gray Scale Mode; COMSCN=1) 40
Figure 31 ICON DDRAM Display Direction 41
Figure 32 Command Sequence for Set ICON 41
Figure 33 Partial Display Definition 42
Figure 34 Scroll Definition 42
Figure 35 64 duty and COMSCN = H 43
Figure 36 64 duty and COMSCN = L 43

Sitronix Confidential The information contained herein is the exclusive property of Sitronix and shall not be distributed, reproduced, or disclosed in whole or in part without prior written permission of Sitronix.

Figure 37 Internal Power Supply Circuit 44
Figure 38 External Power Supply Circuit 45
Figure 39 V0 Programming Range 46
Figure 40 Temperature Compensation Coefficient Selection 47
Figure 41 Temperature Gradient Compensation 48
Figure 42 Frame Rate 49
Figure 41 Different RAM accessing setup under COMMAND 0xBCh 59
Figure 42 Different RAM accessing setup under COMMAND 0xBCh 60
Figure 45 Command Sequence for Read/Modify/Write 62

Sitronix Confidential The information contained herein is the exclusive property of Sitronix and shall not be distributed, reproduced, or disclosed in whole or in part without prior written permission of Sitronix.

LIST OF TABLES

Table 1 Parallel/Serial Interface Mode 24
Table 2 Microprocessor Selection for Parallel Interface 24
Table 3 Parallel Data Transfer 24
Table 4 Equation V0(T) at Different Temperature 48
Table 5 The Default Values of Registers 51

Sitronix Confidential The information contained herein is the exclusive property of Sitronix and shall not be distributed, reproduced, or disclosed in whole or in part without prior written permission of Sitronix.

1 INTRODUCTION

ST75256 is a driver & controller LSI for 4-level gray scale graphic dot-matrix liquid crystal display systems. It contains 256-segment and 162-common with 1-icon-common driver circuits. This chip can be connected directly to a microprocessor which accepts 8-bit parallel interface (8080-series or 6800-series type), 4-Line serial, 3-Line serial or I^2C interface. Display data is stored into an on-chip Display Data RAM (DDRAM). It performs the Display Data RAM read/write operation without external operating clock, and the power consumption can be minimized. In addition, since all necessary power supply circuits for LCD system are built-in, ST75256 constructs a LCD display system with the fewest components.

2 FEATURES

Single-chip LCD controller/driver

Driver Output Circuits

- 256-segment / 162-common + 1-icon-common

On-chip Display Data RAM

- Capacity: 256x 163x 2 = 83,456bits (Max)

Various Partial Display Features

- Applicable partial duty
- Partial window moving & data scrolling

Microprocessor Interface

- 8-bit parallel bi-directional interface supports 6800-series or 8080-series MPU
- 4-line serial interface support write-operation and read-status
- 9 bit 3-line serial interface support write-operation and read-status
- I^2C interface

On-chip Low Power Analog Circuit

- On-chip oscillator circuit
- Voltage booster with built-in boost-capacitors
- Extremely few external components: 3 capacitors
- Built-in voltage regulator with programmable contrast
- Built-in voltage follower supports LCD bias voltage Available bias: 1/9 ~ 1/14

Operating Voltage Range

- Digital Power (VDD1): 1.8V ~ 3.3V (TYP.)
- Analog Power (VDD2~VDD4): 2.8V ~ 3.3V (TYP.)
- LCD operation voltage (Vop = V0-XV0): 18V(Max.)

Built-in OTP−ROM for LCD Vop Optimization

For Industrial Use

Package Type: COG, COF

ST75256	**6800 , 8080 , 4-Line , 3-Line Interface (without I^2C Interface)**	
ST75256i	**I^2C Interface**	

Sitronix Confidential The information contained herein is the exclusive property of Sitronix and shall not be distributed, reproduced, or disclosed in whole or in part without prior written permission of Sitronix.

3 PAD ARRANGEMENT

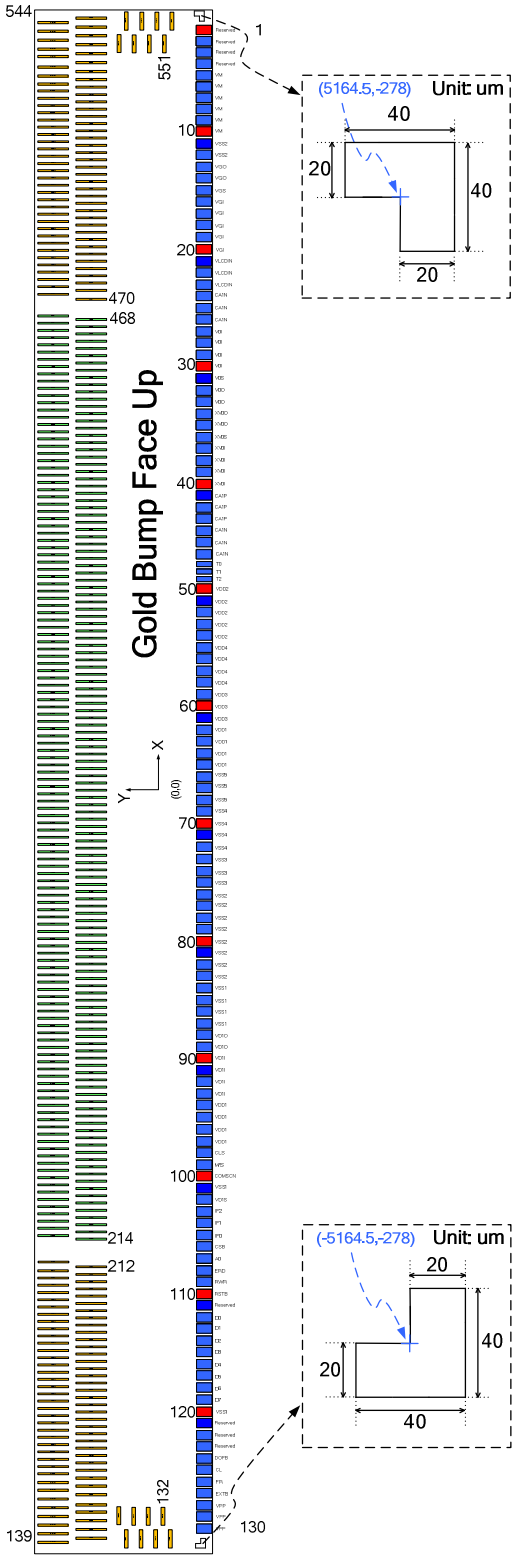

ST75256-G2			
Chip Size		10500x725	
Chip Thickness	480	Bump Height	15
PAD No.		Bump Size	
1~46, 50~97, 128~130,		62x63	
98~105, 110~127		60x63	
47~49		22x63	
106~109		72x63	
131~138, 545~552		111x14	
139~544		14x111	
PAD No.		Bump Pitch	
1~46, 50~97, 128~130,		80	
46~47, 49~50		60	
47~49		40	
97~98, 127~128		79	
98~105, 110~127		78	
105~106, 109~110		84	
106~109		90	
131~552		25	
* Refer to “PAD CENTER COORDINATES” for ITO layout			

Unit: um

Figure 1 Chip Outline

Sitronix Confidential The information contained herein is the exclusive property of Sitronix and shall not be distributed, reproduced, or disclosed in whole or in part without prior written permission of Sitronix.

4 PAD CENTER COORDINATES

PAD	NAME	X	Y
1	Reserved	5094	-273.5
2	Reserved	5014	-273.5
3	Reserved	4934	-273.5
4	Reserved	4854	-273.5
5	VM	4774	-273.5
6	VM	4694	-273.5
7	VM	4614	-273.5
8	VM	4534	-273.5
9	VM	4454	-273.5
10	VM	4374	-273.5
11	VSS2	4294	-273.5
12	VSS2	4214	-273.5
13	VGO	4134	-273.5
14	VGO	4054	-273.5
15	VGS	3974	-273.5
16	VGI	3894	-273.5
17	VGI	3814	-273.5
18	VGI	3734	-273.5
19	VGI	3654	-273.5
20	VGI	3574	-273.5
21	VLCDIN	3494	-273.5
22	VLCDIN	3414	-273.5
23	VLCDIN	3334	-273.5
24	CA1N	3254	-273.5
25	CA1N	3174	-273.5
26	CA1N	3094	-273.5
27	V0I	3014	-273.5
28	V0I	2934	-273.5
29	V0I	2854	-273.5
30	V0I	2774	-273.5
31	V0S	2694	-273.5
32	V0O	2614	-273.5
33	V0O	2534	-273.5

PAD	NAME	X	Y
34	XV0O	2454	-273.5
35	XV0O	2374	-273.5
36	XV0S	2294	-273.5
37	XV0I	2214	-273.5
38	XV0I	2134	-273.5
39	XV0I	2054	-273.5
40	XV0I	1974	-273.5
41	CA1P	1894	-273.5
42	CA1P	1814	-273.5
43	CA1P	1734	-273.5
44	CA1N	1654	-273.5
45	CA1N	1574	-273.5
46	CA1N	1494	-273.5
47	T0	1434	-273.5
48	T1	1394	-273.5
49	T2	1354	-273.5
50	VDD2	1294	-273.5
51	VDD2	1214	-273.5
52	VDD2	1134	-273.5
53	VDD2	1054	-273.5
54	VDD2	974	-273.5
55	VDD4	894	-273.5
56	VDD4	814	-273.5
57	VDD4	734	-273.5
58	VDD4	654	-273.5
59	VDD3	574	-273.5
60	VDD3	494	-273.5
61	VDD3	414	-273.5
62	VDD1	334	-273.5
63	VDD1	254	-273.5
64	VDD1	174	-273.5
65	VDD1	94	-273.5
66	VSS5	14	-273.5

Sitronix Confidential The information contained herein is the exclusive property of Sitronix and shall not be distributed, reproduced, or disclosed in whole or in part without prior written permission of Sitronix.

PAD	NAME	X	Y
67	VSS5	-66	-273.5
68	VSS5	-146	-273.5
69	VSS4	-226	-273.5
70	VSS4	-306	-273.5
71	VSS4	-386	-273.5
72	VSS4	-466	-273.5
73	VSS3	-546	-273.5
74	VSS3	-626	-273.5
75	VSS3	-706	-273.5
76	VSS2	-786	-273.5
77	VSS2	-866	-273.5
78	VSS2	-946	-273.5
79	VSS2	-1026	-273.5
80	VSS2	-1106	-273.5
81	VSS2	-1186	-273.5
82	VSS2	-1266	-273.5
83	VSS2	-1346	-273.5
84	VSS1	-1426	-273.5
85	VSS1	-1506	-273.5
86	VSS1	-1586	-273.5
87	VSS1	-1666	-273.5
88	VD1O	-1746	-273.5
89	VD1O	-1826	-273.5
90	VD1I	-1906	-273.5
91	VD1I	-1986	-273.5
92	VD1I	-2066	-273.5
93	VD1I	-2146	-273.5
94	VDD1	-2226	-273.5
95	VDD1	-2306	-273.5
96	VDD1	-2386	-273.5
97	VDD1	-2466	-273.5
98	CLS	-2545	-273.5
99	M/S	-2623	-273.5
100	COMSCN	-2701	-273.5
101	VSS1	-2779	-273.5

PAD	NAME	X	Y
102	VD1S	-2857	-273.5
103	IF2	-2935	-273.5
104	IF1	-3013	-273.5
105	IF0	-3091	-273.5
106	CSB	-3175	-273.5
107	A0	-3265	-273.5
108	ERD	-3355	-273.5
109	RWR	-3445	-273.5
110	RSTB	-3529	-273.5
111	Reserved	-3607	-273.5
112	D0	-3685	-273.5
13	D1	-3763	-273.5
114	D2	-3841	-273.5
115	D3	-3919	-273.5
116	D4	-3997	-273.5
117	D5	-4075	-273.5
118	D6	-4153	-273.5
119	D7	-4231	-273.5
120	VSS1	-4309	-273.5
121	Reserved	-4387	-273.5
122	Reserved	-4465	-273.5
123	Reserved	-4543	-273.5
124	DOFB	-4621	-273.5
125	CL	-4699	-273.5
126	FR	-4777	-273.5
127	EXTB	-4855	-273.5
128	VPP	-4934	-273.5
129	VPP	-5014	-273.5
130	VPP	-5094	-273.5
131	COMS	-5136	-186
132	COM161	-5005	-161
133	COM159	-5136	-136
134	COM157	-5005	-111
135	COM155	-5136	-86
136	COM153	-5005	-61

Sitronix Confidential The information contained herein is the exclusive property of Sitronix and shall not be distributed, reproduced, or disclosed in whole or in part without prior written permission of Sitronix.

PAD	NAME	X	Y
137	COM151	-5136	-36
138	COM149	-5005	-11
139	COM147	-5157.5	249.5
140	COM145	-5132.5	118.5
141	COM143	-5107.5	249.5
142	COM141	-5082.5	118.5
143	COM139	-5057.5	249.5
144	COM137	-5032.5	118.5
145	COM135	-5007.5	249.5
146	COM133	-4982.5	118.5
147	COM131	-4957.5	249.5
148	COM129	-4932.5	118.5
149	COM127	-4907.5	249.5
150	COM125	-4882.5	118.5
151	COM123	-4857.5	249.5
152	COM121	-4832.5	118.5
153	COM119	-4807.5	249.5
154	COM117	-4782.5	118.5
155	COM115	-4757.5	249.5
156	COM113	-4732.5	118.5
157	COM111	-4707.5	249.5
158	COM109	-4682.5	118.5
159	COM107	-4657.5	249.5
160	COM105	-4632.5	118.5
161	COM103	-4607.5	249.5
162	COM101	-4582.5	118.5
163	COM99	-4557.5	249.5
164	COM97	-4532.5	118.5
165	COM95	-4507.5	249.5
166	COM93	-4482.5	118.5
167	COM91	-4457.5	249.5
168	COM89	-4432.5	118.5
169	COM87	-4407.5	249.5
170	COM85	-4382.5	118.5
171	COM83	-4357.5	249.5

PAD	NAME	X	Y
172	COM81	-4332.5	118.5
173	COM79	-4307.5	249.5
174	COM77	-4282.5	118.5
175	COM75	-4257.5	249.5
176	COM73	-4232.5	118.5
177	COM71	-4207.5	249.5
178	COM69	-4182.5	118.5
179	COM67	-4157.5	249.5
180	COM65	-4132.5	118.5
181	COM63	-4107.5	249.5
182	COM61	-4082.5	118.5
183	COM59	-4057.5	249.5
184	COM57	-4032.5	118.5
185	COM55	-4007.5	249.5
186	COM53	-3982.5	118.5
187	COM51	-3957.5	249.5
188	COM49	-3932.5	118.5
189	COM47	-3907.5	249.5
190	COM45	-3882.5	118.5
191	COM43	-3857.5	249.5
192	COM41	-3832.5	118.5
193	COM39	-3807.5	249.5
194	COM37	-3782.5	118.5
195	COM35	-3757.5	249.5
196	COM33	-3732.5	118.5
197	COM31	-3707.5	249.5
198	COM29	-3682.5	118.5
199	COM27	-3657.5	249.5
200	COM25	-3632.5	118.5
201	COM23	-3607.5	249.5
202	COM21	-3582.5	118.5
203	COM19	-3557.5	249.5
204	COM17	-3532.5	118.5
205	COM15	-3507.5	249.5
206	COM13	-3482.5	118.5

Sitronix Confidential The information contained herein is the exclusive property of Sitronix and shall not be distributed, reproduced, or disclosed in whole or in part without prior written permission of Sitronix.

PAD	NAME	X	Y
207	COM11	-3457.5	249.5
208	COM9	-3432.5	118.5
209	COM7	-3407.5	249.5
210	COM5	-3382.5	118.5
211	COM3	-3357.5	249.5
212	COM1	-3332.5	118.5
213	COMS	-3307.5	249.5
214	SEG255	-3187.5	118.5
215	SEG254	-3162.5	249.5
216	SEG253	-3137.5	118.5
217	SEG252	-3112.5	249.5
218	SEG251	-3087.5	118.5
219	SEG250	-3062.5	249.5
220	SEG249	-3037.5	118.5
221	SEG248	-3012.5	249.5
222	SEG247	-2987.5	118.5
223	SEG246	-2962.5	249.5
224	SEG245	-2937.5	118.5
225	SEG244	-2912.5	249.5
226	SEG243	-2887.5	118.5
227	SEG242	-2862.5	249.5
228	SEG241	-2837.5	118.5
229	SEG240	-2812.5	249.5
230	SEG239	-2787.5	118.5
231	SEG238	-2762.5	249.5
232	SEG237	-2737.5	118.5
233	SEG236	-2712.5	249.5
234	SEG235	-2687.5	118.5
235	SEG234	-2662.5	249.5
236	SEG233	-2637.5	118.5
237	SEG232	-2612.5	249.5
238	SEG231	-2587.5	118.5
239	SEG230	-2562.5	249.5
240	SEG229	-2537.5	118.5
241	SEG228	-2512.5	249.5

PAD	NAME	X	Y
242	SEG227	-2487.5	118.5
243	SEG226	-2462.5	249.5
244	SEG225	-2437.5	118.5
245	SEG224	-2412.5	249.5
246	SEG223	-2387.5	118.5
247	SEG222	-2362.5	249.5
248	SEG221	-2337.5	118.5
249	SEG220	-2312.5	249.5
250	SEG219	-2287.5	118.5
251	SEG218	-2262.5	249.5
252	SEG217	-2237.5	118.5
253	SEG216	-2212.5	249.5
254	SEG215	-2187.5	118.5
255	SEG214	-2162.5	249.5
256	SEG213	-2137.5	118.5
257	SEG212	-2112.5	249.5
258	SEG211	-2087.5	118.5
259	SEG210	-2062.5	249.5
260	SEG209	-2037.5	118.5
261	SEG208	-2012.5	249.5
262	SEG207	-1987.5	118.5
263	SEG206	-1962.5	249.5
264	SEG205	-1937.5	118.5
265	SEG204	-1912.5	249.5
266	SEG203	-1887.5	118.5
267	SEG202	-1862.5	249.5
268	SEG201	-1837.5	118.5
269	SEG200	-1812.5	249.5
270	SEG199	-1787.5	118.5
271	SEG198	-1762.5	249.5
272	SEG197	-1737.5	118.5
273	SEG196	-1712.5	249.5
274	SEG195	-1687.5	118.5
275	SEG194	-1662.5	249.5
276	SEG193	-1637.5	118.5

Sitronix Confidential The information contained herein is the exclusive property of Sitronix and shall not be distributed, reproduced, or disclosed in whole or in part without prior written permission of Sitronix.

PAD	NAME	X	Y
277	SEG192	-1612.5	249.5
278	SEG191	-1587.5	118.5
279	SEG190	-1562.5	249.5
280	SEG189	-1537.5	118.5
281	SEG188	-1512.5	249.5
282	SEG187	-1487.5	118.5
283	SEG186	-1462.5	249.5
284	SEG185	-1437.5	118.5
285	SEG184	-1412.5	249.5
286	SEG183	-1387.5	118.5
287	SEG182	-1362.5	249.5
288	SEG181	-1337.5	118.5
289	SEG180	-1312.5	249.5
290	SEG179	-1287.5	118.5
291	SEG178	-1262.5	249.5
292	SEG177	-1237.5	118.5
293	SEG176	-1212.5	249.5
294	SEG175	-1187.5	118.5
295	SEG174	-1162.5	249.5
296	SEG173	-1137.5	118.5
297	SEG172	-1112.5	249.5
298	SEG171	-1087.5	118.5
299	SEG170	-1062.5	249.5
300	SEG169	-1037.5	118.5
301	SEG168	-1012.5	249.5
302	SEG167	-987.5	118.5
303	SEG166	-962.5	249.5
304	SEG165	-937.5	118.5
305	SEG164	-912.5	249.5
306	SEG163	-887.5	118.5
307	SEG162	-862.5	249.5
308	SEG161	-837.5	118.5
309	SEG160	-812.5	249.5
310	SEG159	-787.5	118.5
311	SEG158	-762.5	249.5

PAD	NAME	X	Y
312	SEG157	-737.5	118.5
313	SEG156	-712.5	249.5
314	SEG155	-687.5	118.5
315	SEG154	-662.5	249.5
316	SEG153	-637.5	118.5
317	SEG152	-612.5	249.5
318	SEG151	-587.5	118.5
319	SEG150	-562.5	249.5
320	SEG149	-537.5	118.5
321	SEG148	-512.5	249.5
322	SEG147	-487.5	118.5
323	SEG146	-462.5	249.5
324	SEG145	-437.5	118.5
325	SEG144	-412.5	249.5
326	SEG143	-387.5	118.5
327	SEG142	-362.5	249.5
328	SEG141	-337.5	118.5
329	SEG140	-312.5	249.5
330	SEG139	-287.5	118.5
331	SEG138	-262.5	249.5
332	SEG137	-237.5	118.5
333	SEG136	-212.5	249.5
334	SEG135	-187.5	118.5
335	SEG134	-162.5	249.5
336	SEG133	-137.5	118.5
337	SEG132	-112.5	249.5
338	SEG131	-87.5	118.5
339	SEG130	-62.5	249.5
340	SEG129	-37.5	118.5
341	SEG128	-12.5	249.5
342	SEG127	12.5	118.5
343	SEG126	37.5	249.5
344	SEG125	62.5	118.5
345	SEG124	87.5	249.5
346	SEG123	112.5	118.5

Sitronix Confidential The information contained herein is the exclusive property of Sitronix and shall not be distributed, reproduced, or disclosed in whole or in part without prior written permission of Sitronix.

PAD	NAME	X	Y
347	SEG122	137.5	249.5
348	SEG121	162.5	118.5
349	SEG120	187.5	249.5
350	SEG119	212.5	118.5
351	SEG118	237.5	249.5
352	SEG117	262.5	118.5
353	SEG116	287.5	249.5
354	SEG115	312.5	118.5
355	SEG114	337.5	249.5
356	SEG113	362.5	118.5
357	SEG112	387.5	249.5
358	SEG111	412.5	118.5
359	SEG110	437.5	249.5
360	SEG109	462.5	118.5
361	SEG108	487.5	249.5
362	SEG107	512.5	118.5
363	SEG106	537.5	249.5
364	SEG105	562.5	118.5
365	SEG104	587.5	249.5
366	SEG103	612.5	118.5
367	SEG102	637.5	249.5
368	SEG101	662.5	118.5
369	SEG100	687.5	249.5
370	SEG99	712.5	118.5
371	SEG98	737.5	249.5
372	SEG97	762.5	118.5
373	SEG96	787.5	249.5
374	SEG95	812.5	118.5
375	SEG94	837.5	249.5
376	SEG93	862.5	118.5
377	SEG92	887.5	249.5
378	SEG91	912.5	118.5
379	SEG90	937.5	249.5
380	SEG89	962.5	118.5
381	SEG88	987.5	249.5

PAD	NAME	X	Y
382	SEG87	1012.5	118.5
383	SEG86	1037.5	249.5
384	SEG85	1062.5	118.5
385	SEG84	1087.5	249.5
386	SEG83	1112.5	118.5
387	SEG82	1137.5	249.5
388	SEG81	1162.5	118.5
389	SEG80	1187.5	249.5
390	SEG79	1212.5	118.5
391	SEG78	1237.5	249.5
392	SEG77	1262.5	118.5
393	SEG76	1287.5	249.5
394	SEG75	1312.5	118.5
395	SEG74	1337.5	249.5
396	SEG73	1362.5	118.5
397	SEG72	1387.5	249.5
398	SEG71	1412.5	118.5
399	SEG70	1437.5	249.5
400	SEG69	1462.5	118.5
401	SEG68	1487.5	249.5
402	SEG67	1512.5	118.5
403	SEG66	1537.5	249.5
404	SEG65	1562.5	118.5
405	SEG64	1587.5	249.5
406	SEG63	1612.5	118.5
407	SEG62	1637.5	249.5
408	SEG61	1662.5	118.5
409	SEG60	1687.5	249.5
410	SEG59	1712.5	118.5
411	SEG58	1737.5	249.5
412	SEG57	1762.5	118.5
413	SEG56	1787.5	249.5
414	SEG55	1812.5	118.5
415	SEG54	1837.5	249.5
416	SEG53	1862.5	118.5

Sitronix Confidential The information contained herein is the exclusive property of Sitronix and shall not be distributed, reproduced, or disclosed in whole or in part without prior written permission of Sitronix.

PAD	NAME	X	Y
417	SEG52	1887.5	249.5
418	SEG51	1912.5	118.5
419	SEG50	1937.5	249.5
420	SEG49	1962.5	118.5
421	SEG48	1987.5	249.5
422	SEG47	2012.5	118.5
423	SEG46	2037.5	249.5
424	SEG45	2062.5	118.5
425	SEG44	2087.5	249.5
426	SEG43	2112.5	118.5
427	SEG42	2137.5	249.5
428	SEG41	2162.5	118.5
429	SEG40	2187.5	249.5
430	SEG39	2212.5	118.5
431	SEG38	2237.5	249.5
432	SEG37	2262.5	118.5
433	SEG36	2287.5	249.5
434	SEG35	2312.5	118.5
435	SEG34	2337.5	249.5
436	SEG33	2362.5	118.5
437	SEG32	2387.5	249.5
438	SEG31	2412.5	118.5
439	SEG30	2437.5	249.5
440	SEG29	2462.5	118.5
441	SEG28	2487.5	249.5
442	SEG27	2512.5	118.5
443	SEG26	2537.5	249.5
444	SEG25	2562.5	118.5
445	SEG24	2587.5	249.5
446	SEG23	2612.5	118.5
447	SEG22	2637.5	249.5
448	SEG21	2662.5	118.5
449	SEG20	2687.5	249.5
450	SEG19	2712.5	118.5
451	SEG18	2737.5	249.5

PAD	NAME	X	Y
452	SEG17	2762.5	118.5
453	SEG16	2787.5	249.5
454	SEG15	2812.5	118.5
455	SEG14	2837.5	249.5
456	SEG13	2862.5	118.5
457	SEG12	2887.5	249.5
458	SEG11	2912.5	118.5
459	SEG10	2937.5	249.5
460	SEG9	2962.5	118.5
461	SEG8	2987.5	249.5
462	SEG7	3012.5	118.5
463	SEG6	3037.5	249.5
464	SEG5	3062.5	118.5
465	SEG4	3087.5	249.5
466	SEG3	3112.5	118.5
467	SEG2	3137.5	249.5
468	SEG1	3162.5	118.5
469	SEG0	3187.5	249.5
470	COMS	3307.5	118.5
471	COM0	3332.5	249.5
472	COM2	3357.5	118.5
473	COM4	3382.5	249.5
474	COM6	3407.5	118.5
475	COM8	3432.5	249.5
476	COM10	3457.5	118.5
477	COM12	3482.5	249.5
478	COM14	3507.5	118.5
479	COM16	3532.5	249.5
480	COM18	3557.5	118.5
481	COM20	3582.5	249.5
482	COM22	3607.5	118.5
483	COM24	3632.5	249.5
484	COM26	3657.5	118.5
485	COM28	3682.5	249.5
486	COM30	3707.5	118.5

Sitronix Confidential The information contained herein is the exclusive property of Sitronix and shall not be distributed, reproduced, or disclosed in whole or in part without prior written permission of Sitronix.

PAD	NAME	X	Y
487	COM32	3732.5	249.5
488	COM34	3757.5	118.5
489	COM36	3782.5	249.5
490	COM38	3807.5	118.5
491	COM40	3832.5	249.5
492	COM42	3857.5	118.5
493	COM44	3882.5	249.5
494	COM46	3907.5	118.5
495	COM48	3932.5	249.5
496	COM50	3957.5	118.5
497	COM52	3982.5	249.5
498	COM54	4007.5	118.5
499	COM56	4032.5	249.5
500	COM58	4057.5	118.5
501	COM60	4082.5	249.5
502	COM62	4107.5	118.5
503	COM64	4132.5	249.5
504	COM66	4157.5	118.5
505	COM68	4182.5	249.5
506	COM70	4207.5	118.5
507	COM72	4232.5	249.5
508	COM74	4257.5	118.5
509	COM76	4282.5	249.5
510	COM78	4307.5	118.5
511	COM80	4332.5	249.5
512	COM82	4357.5	118.5
513	COM84	4382.5	249.5
514	COM86	4407.5	118.5
515	COM88	4432.5	249.5
516	COM90	4457.5	118.5
517	COM92	4482.5	249.5
518	COM94	4507.5	118.5
519	COM96	4532.5	249.5
520	COM98	4557.5	118.5
521	COM100	4582.5	249.5

PAD	NAME	X	Y
522	COM102	4607.5	118.5
523	COM104	4632.5	249.5
524	COM106	4657.5	118.5
525	COM108	4682.5	249.5
526	COM110	4707.5	118.5
527	COM112	4732.5	249.5
528	COM114	4757.5	118.5
529	COM116	4782.5	249.5
530	COM118	4807.5	118.5
531	COM120	4832.5	249.5
532	COM122	4857.5	118.5
533	COM124	4882.5	249.5
534	COM126	4907.5	118.5
535	COM128	4932.5	249.5
536	COM130	4957.5	118.5
537	COM132	4982.5	249.5
538	COM134	5007.5	118.5
539	COM136	5032.5	249.5
540	COM138	5057.5	118.5
541	COM140	5082.5	249.5
542	COM142	5107.5	118.5
543	COM144	5132.5	249.5
544	COM146	5157.5	118.5
545	COM148	5005	-11
546	COM150	5136	-36
547	COM152	5005	-61
548	COM154	5136	-86
549	COM156	5005	-111
550	COM158	5136	-136
551	COM160	5005	-161
552	COMS	5136	-186

Unit : um

Sitronix Confidential The information contained herein is the exclusive property of Sitronix and shall not be distributed, reproduced, or disclosed in whole or in part without prior written permission of Sitronix.

5 BLOCK DIAGRAM

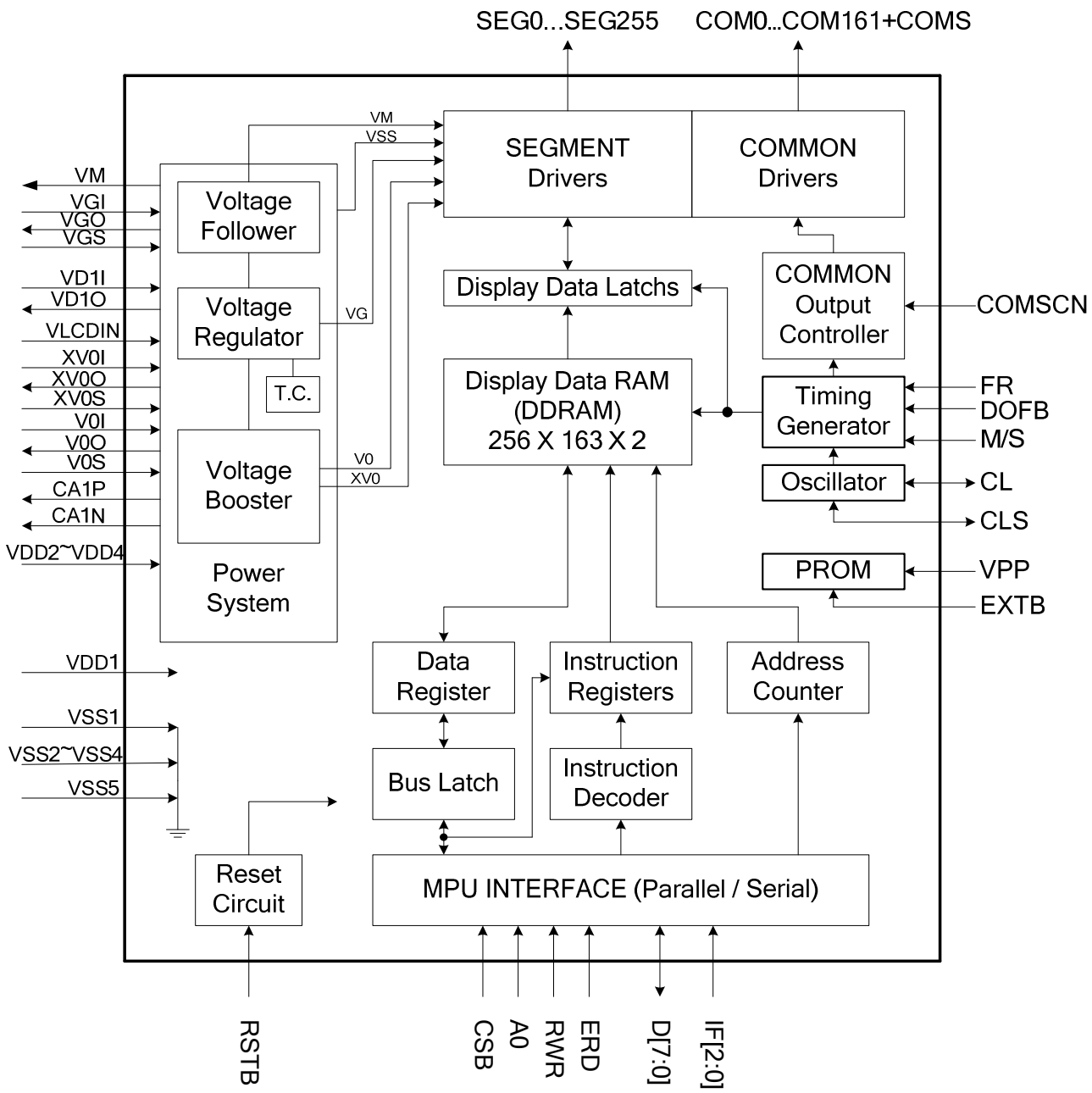

Figure 2 Block Diagram

Sitronix Confidential The information contained herein is the exclusive property of Sitronix and shall not be distributed, reproduced, or disclosed in whole or in part without prior written permission of Sitronix.

6 PIN DESCRIPTION

6.1 Power Supply Pins

<table>
<tr><th>Name</th><th>Type</th><th>Description</th></tr>
<tr><td>VDD1</td><td>Power</td><td>Digital power. If VDD1=VDD2, connect to VDD2 externally.</td></tr>
<tr><td>VDD2</td><td>Power</td><td>Analog power for internal booster. If VDD1=VDD2, connect to VDD1 externally.</td></tr>
<tr><td>VDD3</td><td>Power</td><td>Analog power for temperature compensation circuit.</td></tr>
<tr><td>VDD4</td><td>Power</td><td>Analog power for follower circuit.</td></tr>
<tr><td>VSS1</td><td>Power</td><td>Digital ground. Ground system should be connected together.</td></tr>
<tr><td>VSS2
VSS3
VSS4</td><td>Power</td><td>Analog ground. Ground system should be connected together.</td></tr>
<tr><td>VSS5</td><td>Power</td><td>Analog ground for external power supply and should be connected with VSS1~VSS4.</td></tr>
<tr><td>VD1S</td><td>I</td><td>Digital power source selection.
VD1S = “L”: the power source of digital circuit is VDD1.
VD1S = “H”: the power source of digital circuit is internal regulator.
<table>
<tr><th>VDD1 (TYP.)</th><th>Level of VD1S</th></tr>
<tr><td>1.8V</td><td>VSS1</td></tr>
<tr><td>2.8V</td><td>VDD1</td></tr>
<tr><td>3.0V</td><td>VDD1</td></tr>
<tr><td>3.3V</td><td>VDD1</td></tr>
</table></td></tr>
<tr><td>VD1I
VD1O</td><td>Power</td><td>VD1I is the power source of digital circuits.
VD1O is the VD1 output. VD1I and VD1O should be connected together.</td></tr>
<tr><td>CA1P
CA1N</td><td>O</td><td>DC/DC voltage converter. Connect a capacitor between CA1P and CA1N.</td></tr>
<tr><td>VLCDIN</td><td>Power</td><td>External voltage supply for power system.
If the internal voltage generator is used, VLCDIN has to be left open.</td></tr>
<tr><td>V0O
V0I
V0S</td><td>Power</td><td>Positive operating voltage of COM-drivers.
V0O is the output of the positive Vop generator.
V0I is the positive Vop supply of LCD drivers.
V0S is the sensor of the positive Vop generator.
V0O, V0I & V0S should be connected together by ITO.</td></tr>
</table>

Sitronix Confidential The information contained herein is the exclusive property of Sitronix and shall not be distributed, reproduced, or disclosed in whole or in part without prior written permission of Sitronix.

<table>
<tr><th>Name</th><th>Type</th><th>Description</th></tr>
<tr><td>XV0O
XV0I
XV0S</td><td>Power</td><td>Negative operating voltage of COM-drivers.
XV0O is the output of the negative Vop generator.
XV0I is the negative Vop supply of LCD drivers.
XV0S is the sensor of the negative Vop generator.
XV0O, XV0I & XV0S should be connected together by ITO.</td></tr>
<tr><td>VGO
VGI
VGS
VM</td><td>Power</td><td>VG is the power of SEG-drivers. VM is the non-select voltage level of COM-drivers.
VGO is the output of the VG regulator.
VGI is the supply of SEG-drivers.
VGS is the sensor of the VG regulator.
VGO, VGI & VGS should be connected together by ITO.
VM is the I/O pin of LCD bias supply voltage.
Be sure the relationships (as shown below) among the LCD driving voltages:
V0 ≥ VG ≥ VM ≥ VSS ≥ XV0;
VG ≥ VM ≥ 0.9V;
VDD2 ≥ VG ≥ 1.8V
When this IC is operating, VG and VM are generated according to the bias setting shown below:
<table>
<tr><th>LCD Bias</th><th>VG</th><th>VM</th></tr>
<tr><td>1/N Bias</td><td>(2/N) x V0</td><td>(1/N) x V0</td></tr>
</table>
Note: N = 9~14</td></tr>
</table>

Sitronix Confidential The information contained herein is the exclusive property of Sitronix and shall not be distributed, reproduced, or disclosed in whole or in part without prior written permission of Sitronix.

6.2 Driver Output Pins

<table>
<tr><th>Name</th><th>Type</th><th>Description</th></tr>
<tr><td>SEG0
to
SEG255</td><td>O</td><td>LCD SEG-driver outputs.
The display data and the polar-signal (M) control the output voltage of SEG-driver.
<table>
<tr><th rowspan="2">Display Data</th><th rowspan="2">M</th><th colspan="2">Segment Driver Output Voltage</th></tr>
<tr><th>Normal Display</th><th>Reverse Display</th></tr>
<tr><td>H</td><td>H</td><td>VG</td><td>VSS</td></tr>
<tr><td>H</td><td>L</td><td>VSS</td><td>VG</td></tr>
<tr><td>L</td><td>H</td><td>VSS</td><td>VG</td></tr>
<tr><td>L</td><td>L</td><td>VG</td><td>VSS</td></tr>
<tr><td colspan="2">Display OFF, Sleep-In mode</td><td>VSS</td><td>VSS</td></tr>
</table></td></tr>
<tr><td>COM0
to
COM161</td><td>O</td><td>LCD COM-driver outputs.
The internal scanning data and the polar-signal (M) control the output voltage of COM-driver.
<table>
<tr><th>Scan data</th><th>M</th><th>Common Driver Output Voltage</th></tr>
<tr><td>H</td><td>H</td><td>XV0</td></tr>
<tr><td>H</td><td>L</td><td>V0</td></tr>
<tr><td>L</td><td>H</td><td>VM</td></tr>
<tr><td>L</td><td>L</td><td>VM</td></tr>
<tr><td colspan="2">Display OFF, Sleep-In mode</td><td>VSS</td></tr>
</table></td></tr>
<tr><td>COMS</td><td>O</td><td>LCD common driver outputs for icons. There are four pins to choose if using icon. When icon is not used, left these pins open.</td></tr>
</table>

Sitronix Confidential The information contained herein is the exclusive property of Sitronix and shall not be distributed, reproduced, or disclosed in whole or in part without prior written permission of Sitronix.

Name	Type	Description
COMSCN	I	Set scan direction of COM. 1. COMSCN="L"; COM0→COMX; IC is placed under the module. 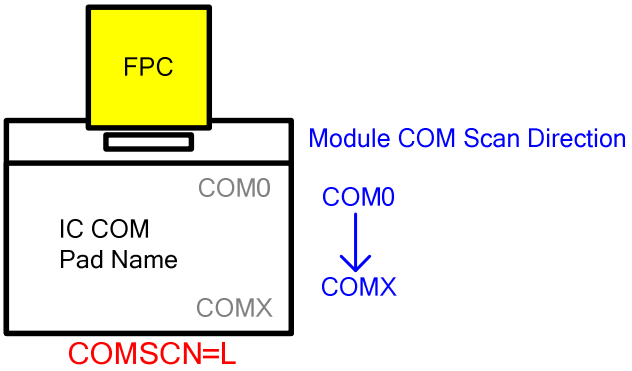 2. COMSCN="H"; COMX→COM0; IC is placed below the module. 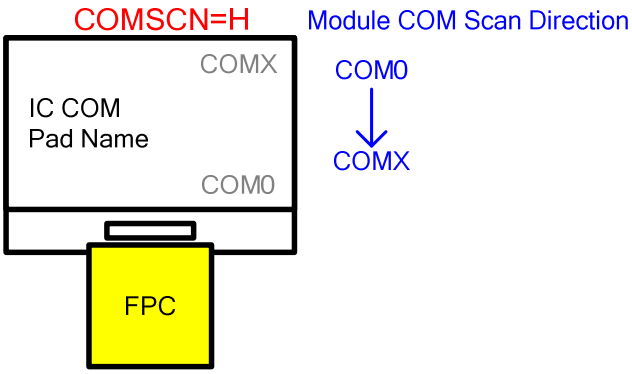 Note: COMX is determined by the DUTY setting.

6.3 Clock System Input

Name	Type	Description
CLS	I	Clock source selection pin. CLS="H": enable internal clock. CLS="L": disable internal clock and use external clock.
CL	I/O	For external clock. If CLS="H": this pin is the output of oscillator. If CLS="L": this pin is the input of oscillator.

Sitronix Confidential The information contained herein is the exclusive property of Sitronix and shall not be distributed, reproduced, or disclosed in whole or in part without prior written permission of Sitronix.

6.4 Interface Logic Pins

<table>
<tr><th>Name</th><th>Type</th><th>Description</th></tr>
<tr><td>RSTB</td><td>I</td><td>Reset input pin. When RSTB is “L”, internal initialization procedure is executed.</td></tr>
<tr><td>IF[2:0]</td><td>I</td><td>These pins select interface operation mode.
<table>
<tr><th>IF2</th><th>IF1</th><th>IF0</th><th>MPU interface type</th></tr>
<tr><td>L</td><td>L</td><td>L</td><td>4-line serial interface</td></tr>
<tr><td>L</td><td>L</td><td>H</td><td>I^2C serial interface</td></tr>
<tr><td>L</td><td>H</td><td>L</td><td>8-bit 6800 parallel interface</td></tr>
<tr><td>L</td><td>H</td><td>H</td><td>8-bit 8080 parallel interface</td></tr>
<tr><td>H</td><td>L</td><td>L</td><td>9-bit 3-line serial interface</td></tr>
</table>
Note: Refer to ““Parallel / Serial Interface” for detailed information.</td></tr>
<tr><td>CSB</td><td>I</td><td>Chip select input pin.
CSB=“L”: This chip is selected and the MPU interface is active.
CSB=“H”: This chip is not selected and the MPU interface is disabled (D[7:0] are high impedance).
<u>There is no CSB pin in I^2C interface and it should be fixed to “L” by VSS1.</u></td></tr>
<tr><td>A0</td><td>I</td><td>It determines whether the access is related to data or command.
A0 = "H": Indicates that D[7:0] are display data;
A0 = "L": Indicates that D[7:0] are control data.
There is no A0 pin in 3-Line SPI and I^2C interface. A0 should be fixed to “H” by VDD1.</td></tr>
<tr><td>RWR</td><td>I</td><td>Read / Write execution control pin. (This pin is only used in parallel interface)
<table>
<tr><th>MPU Type</th><th>RWR</th><th>Description</th></tr>
<tr><td>6800-series</td><td>R/W</td><td>Read / Write control input pin
R/W = “H” : read
R/W = “L” : write</td></tr>
<tr><td>8080-series</td><td>/WR</td><td>Write enable input pin.
The data are latched at the rising edge of the /WR signal.</td></tr>
</table>
This pin is not used in serial interfaces and should be connected to VDD1.</td></tr>
</table>

Sitronix Confidential The information contained herein is the exclusive property of Sitronix and shall not be distributed, reproduced, or disclosed in whole or in part without prior written permission of Sitronix.

<table>
<tr><th>Name</th><th>Type</th><th>Description</th></tr>
<tr><td>ERD</td><td>I</td><td>Read / Write execution control pin. (This pin is only used in parallel interface)
<table>
<tr><th>MPU Type</th><th>ERD</th><th>Description</th></tr>
<tr><td>6800-series</td><td>E</td><td>Read / Write control input pin.
R/W = “H”: When E is “H”, data bus is in output status.
R/W = “L”: The data are latched at the falling edge of the E signal.</td></tr>
<tr><td>8080-series</td><td>/RD</td><td>Read enable input pin.
When /RD is “L”, data bus is in output status.</td></tr>
</table>
This pin is not used in serial interfaces and should be connected to VDD1.</td></tr>
<tr><td rowspan="3">D[7:0]</td><td>I/O</td><td>When using 8-bit parallel interface: 8080 or 6800 mode
8 bit bi-directional data bus. Connect to the data bus of 8-bit microprocessor.
When CSB is “H” , D[7:0] are high impedance.</td></tr>
<tr><td>I/O</td><td>When using serial interface : 4-line SPI or 3-line SPI mode
D[7:4] : fix to “H” by VDD1.
D[3:1] : serial input/output data (SDA).
D[0] : serial input clock (SCL).
<u>D1 to D3 must be connected together (SDA)</u>
When CSB is “H”, D[7:0] are high impedance.</td></tr>
<tr><td>I/O</td><td>When using serial interface : I^{2}C interface
D[7] : SA[1], I^{2}C slave address bit. Must be connected to VDD1 or VSS1.
D[6] : SA[0], I^{2}C slave address bit. Must be connected to VDD1 or VSS1.
D[5:4] : fix to “H” by VDD1.
D[3:2] : SDA_OUT, serial data and acknowledge output for the I^{2}C interface.
D[1] : SDA_IN, serial input data
D[0] : SCL, serial input clock .
<u>D1 to D3 must be connected together (SDA)</u>
<u>CSB must be fixed to “L” by VSS1.</u></td></tr>
</table>

Sitronix Confidential The information contained herein is the exclusive property of Sitronix and shall not be distributed, reproduced, or disclosed in whole or in part without prior written permission of Sitronix.

Note:

1. After VDD1 is turned ON, all MPU interface pins should not be left OPEN.
2. By connecting SDA_OUT to SDA_IN externally, the SDA line becomes fully I^2C interface compatible. Separating acknowledge-output from serial data input is advantageous for chip-on-glass (COG) applications. In COG applications, the ITO resistance and the pull-up resistor will form a voltage divider, which affects acknowledge-signal level. Larger ITO resistance will raise the acknowledged-signal level and system cannot recognize this level as a valid logic “0” level. By separating SDA_IN from SDA_OUT, the IC can be used in a mode that ignores the acknowledge-bit. For applications which check acknowledge-bit, it is necessary to minimize the ITO resistance of the SDA_OUT trace to guarantee a valid low level

6.5 Master/Slave Pins

<table>
<tr><th>Name</th><th>Type</th><th>Description</th></tr>
<tr><td>FR</td><td>I/O</td><td>This is the liquid crystal alternating current signal terminal.</td></tr>
<tr><td>DOFB</td><td>I/O</td><td>This is the LCD synchronous control terminal.</td></tr>
<tr><td>M/S</td><td>I</td><td>This terminal selects the master/slave operation for the ST75256.
Master operation outputs the timing signals that are required for the LCD display, while slave operation input the timing signals required for the liquid crystal display.
That synchronized the liquid crystal display system between Master and Slave.
M/S = “H” Master operation
M/S = “L” Slave operation
<table>
<tr><th>M/S</th><th>CLS</th><th>Oscillator Circuit</th><th>Power Supply Circuit</th><th>CL</th><th>FR</th><th>DOFB</th></tr>
<tr><td>“H”</td><td>“H”
“L”</td><td>Enabled
Disabled</td><td>Enabled
Enabled</td><td>Output
Input</td><td>Output
Output</td><td>Output
Output</td></tr>
<tr><td>“L”</td><td>“H”
“L”</td><td>Disabled
Disabled</td><td>Disabled
Disabled</td><td>Input
Input</td><td>Input
Input</td><td>Input
Input</td></tr>
</table></td></tr>
</table>

Sitronix Confidential The information contained herein is the exclusive property of Sitronix and shall not be distributed, reproduced, or disclosed in whole or in part without prior written permission of Sitronix.

6.6 OTP Pins

Name	Type	Description
VPP	Power	The programming power supply of the built-in OTP. Apply external power 6.5V here when programming (> 8mA for successful programming).
EXTB	I	EXTB="L": Enable the extension operation mode. When programming OTP, connect EXTB to VSS1 externally. This pin has an internal pull-high resistor. Please leave this pin OPEN after special operation.

6.7 Test Pins

Name	Type	Description
T0-T2	Test	Reserved for test only. T0 must be connected to VSS1. T1-T2 must be floating.
Reserved	Test	Reserved for test only, recommend setting to floating.

6.8 ITO Resistance Limitation

Pin Name	ITO Resister
V0I, V0O, V0S, XV0I, XV0O, XV0S, VGI, VGO, VGS,VM,CA1P,CA1N , V_{LCDIN}	<100Ω
VPP, VDD1~VDD4, VSS1~VSS5	<50Ω
A0, ERD, RWR, CSB, D[7:0], (SDA), (SCL)	<700Ω
RSTB	1~3KΩ
IF[2:0], FR, DOFB, M/S, COMSCN, CLS, EXTB, T0, VD1S	<1KΩ
CL, T[2:1], Reserved	Floating

Note:

1. Make sure that the ITO resistance of COM0 ~ COM161 is equal, and so is it of SEG0 ~ SEG255.
2. These limitations include the bottleneck of ITO layout.
3. Refer to the application note for "ITO Layout Guide".

Sitronix Confidential The information contained herein is the exclusive property of Sitronix and shall not be distributed, reproduced, or disclosed in whole or in part without prior written permission of Sitronix.

6.9 ITO Layout Guide

For V0, XV0, VG, VDD and VSS- The ITO layout suggestion is shown as below:

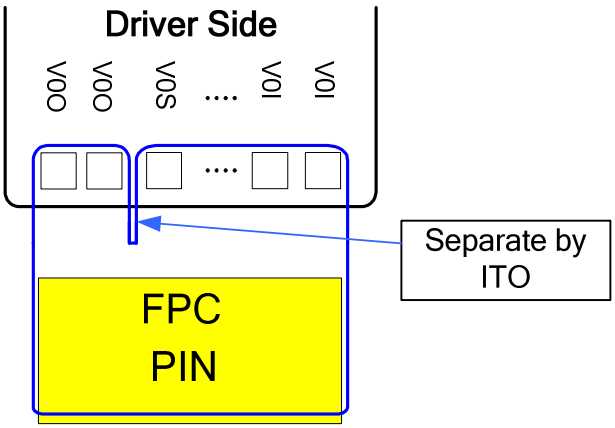

Figure 3 V0 ITO Layout

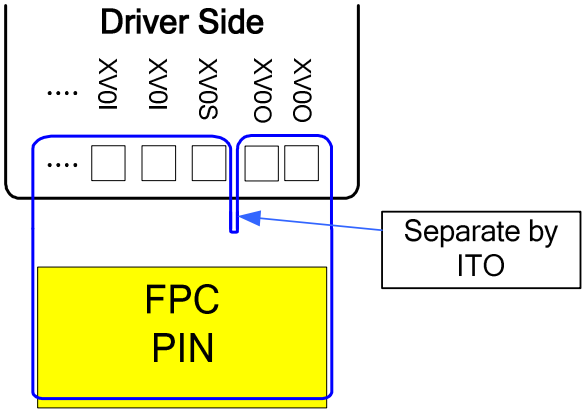

Figure 4 XV0 ITO Layout

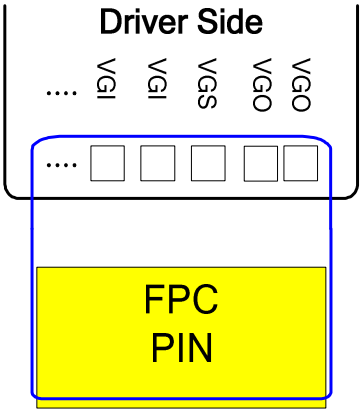

Figure 5 VG ITO Layout

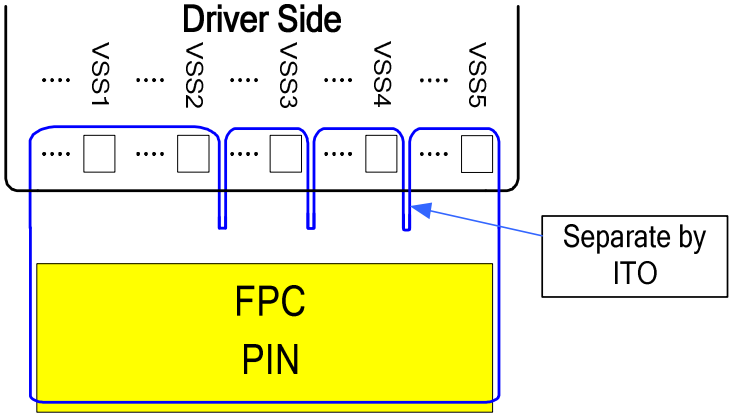

Figure 6 VSS ITO Layout

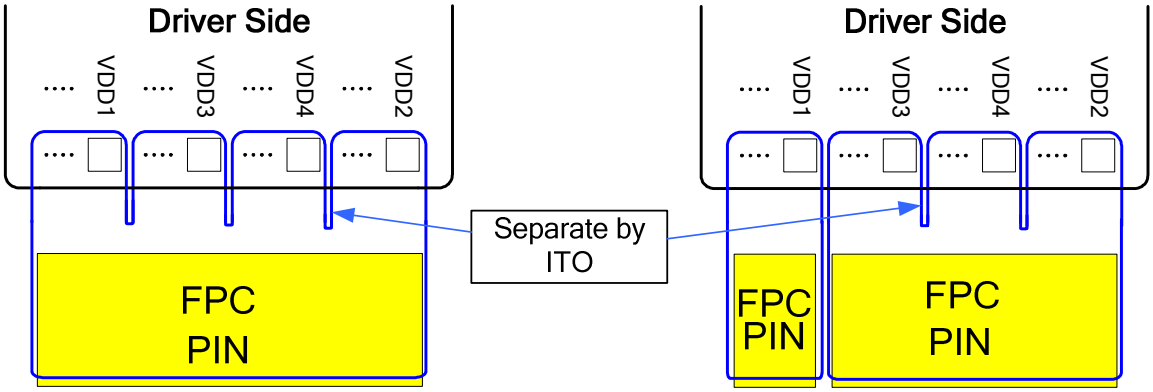

<u>Single VDD:</u> VDDI and VDDA together

<u>Dual VDD:</u> VDDI and VDDA separately

Figure 7 VDD ITO Layout

Sitronix Confidential The information contained herein is the exclusive property of Sitronix and shall not be distributed, reproduced, or disclosed in whole or in part without prior written permission of Sitronix.

6.10 ITO Layout Reference

The reference ITO layout is shown below: Example (4-Line SPI)

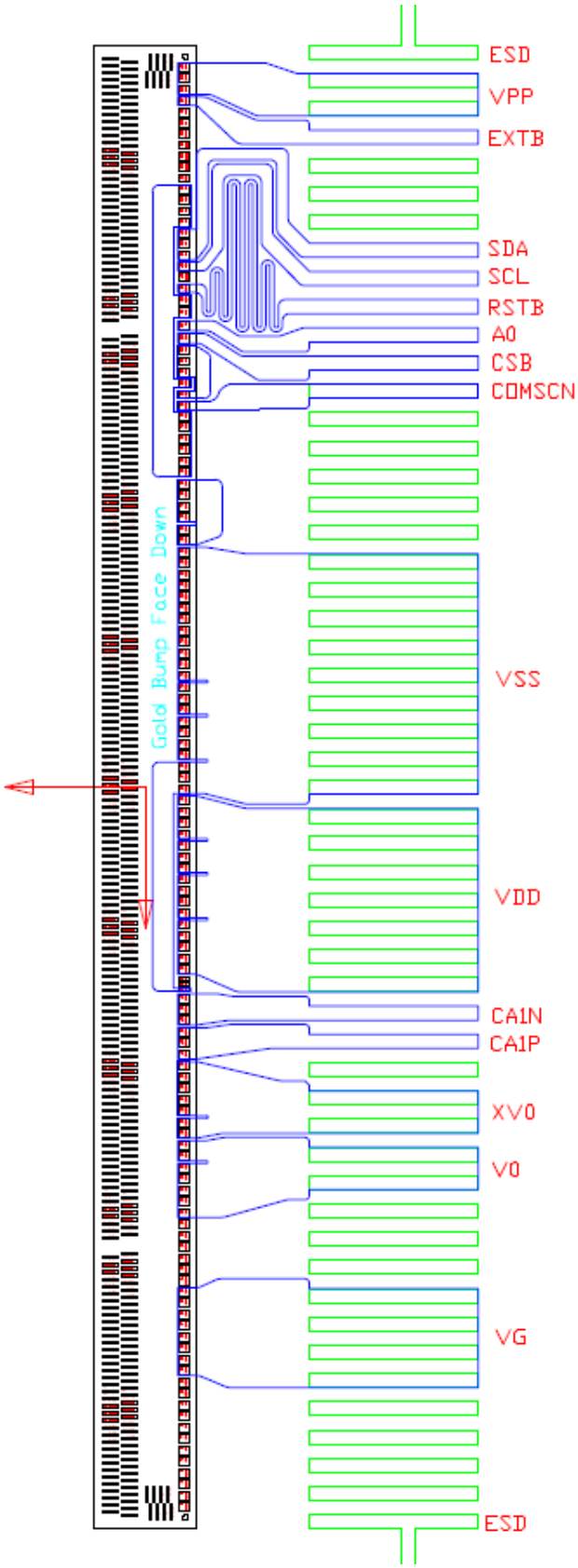

Sitronix Confidential The information contained herein is the exclusive property of Sitronix and shall not be distributed, reproduced, or disclosed in whole or in part without prior written permission of Sitronix.

The reference ITO layout is shown below: Example (8080-series)

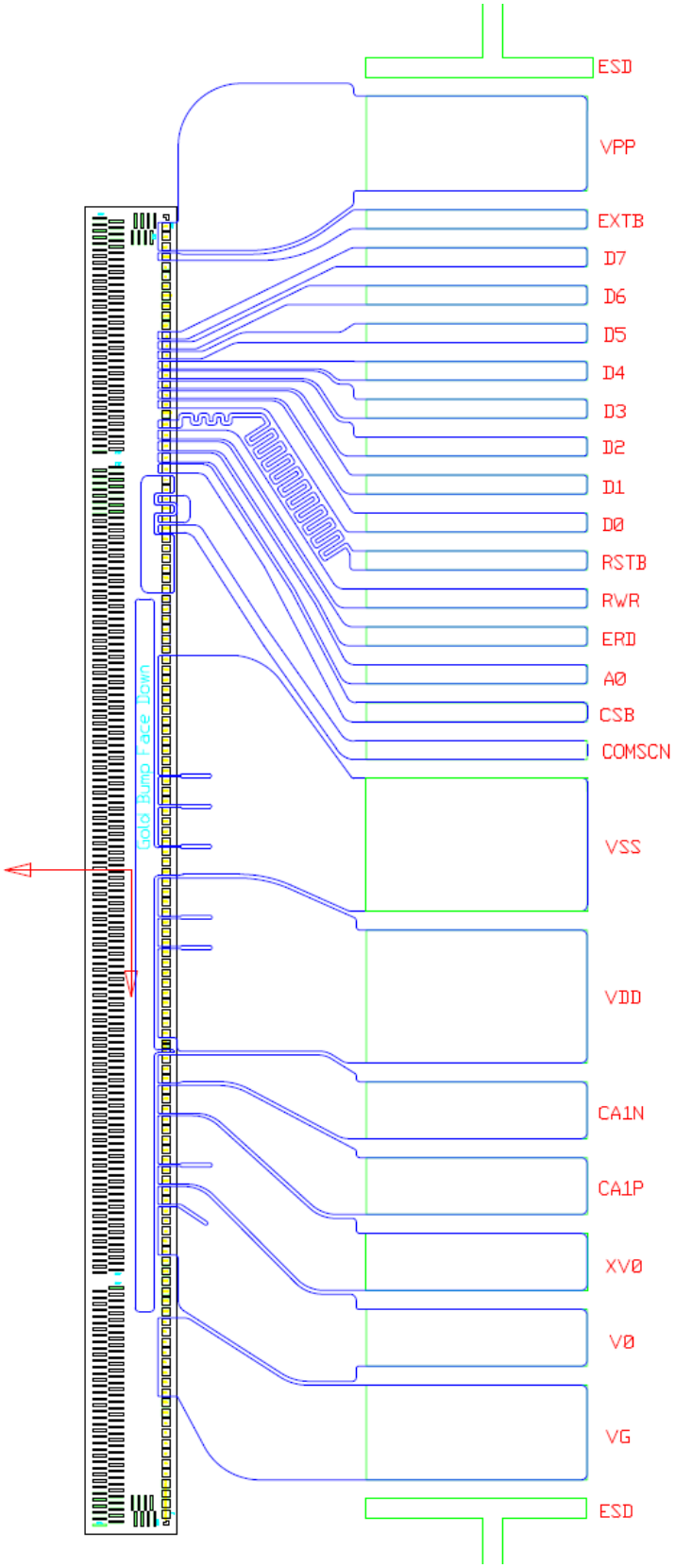

Sitronix Confidential The information contained herein is the exclusive property of Sitronix and shall not be distributed, reproduced, or disclosed in whole or in part without prior written permission of Sitronix.

6.11 For VPP

This is the power source for programming the internal OTP. If the ITO resistance is too high, the operation current will cause the voltage drop while programming OTP. Please try to keep the ITO resistance as low as possible.

6.12 Enhance ESD performance for COG application

1. Increase RSTB resistance:

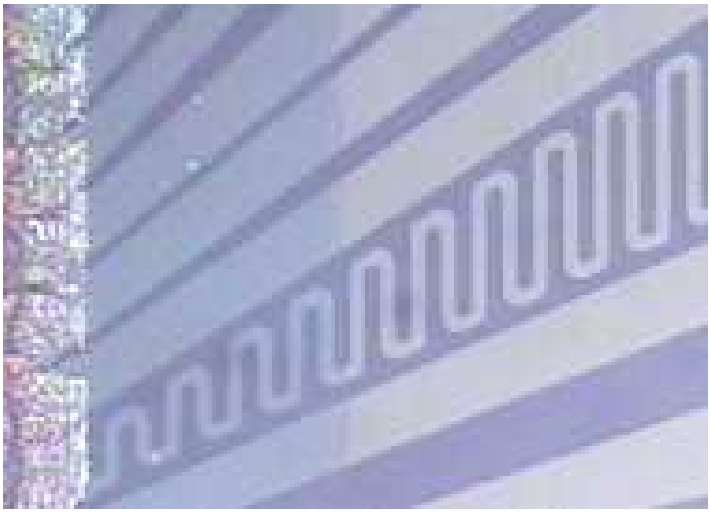

Figure 8 RSTB ITO Layout

2. Add ESD protection ring:

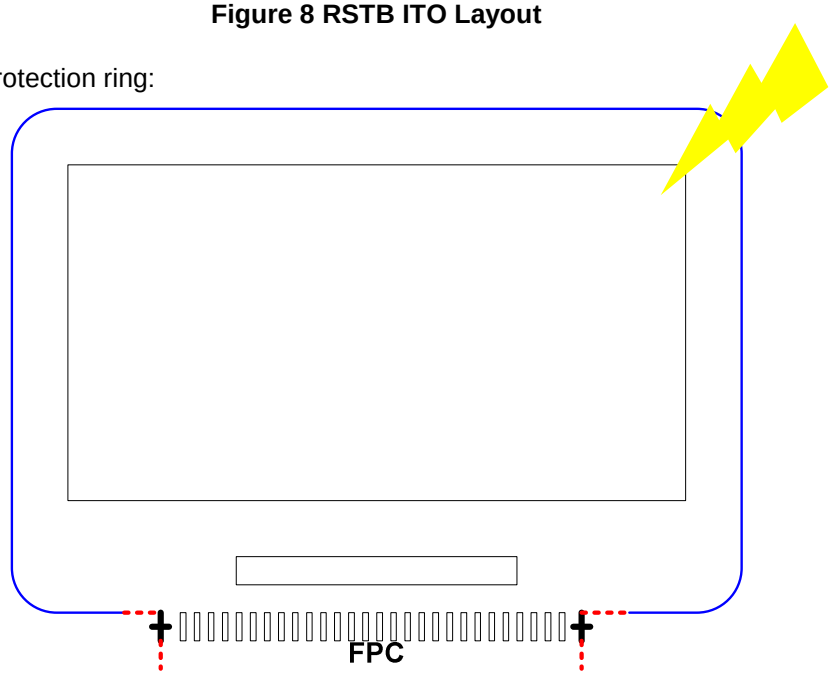

Figure 9 Air ESD Protection Ring

<u>Note: Please short the ESD protection ring to VSS of external device.</u>

Sitronix Confidential The information contained herein is the exclusive property of Sitronix and shall not be distributed, reproduced, or disclosed in whole or in part without prior written permission of Sitronix.

7 FUNCTION DESCRIPTION

7.1 Microprocessor Interface

7.1.1 Chip Select Input

CSB pin is used for chip selection. ST75256 can interface with an MPU when CSB is "L". If CSB is “H”, the inputs of A0, ERD and RWR with any combination will be ignored and D[7:0] are high impedance. In 4-Line serial, 3-Line serial and I^2C interface, the internal shift register and serial counter are reset when CSB is “H”.

7.1.2 Parallel / Serial Interface

ST75256 has five types of interface for kinds of MPU. The MPU interface is selected by IF[2:0] pins as shown in **Table 1**.

Table 1 Parallel/Serial Interface Mode

Type	IF2	IF1	IF0	Interface mode
Serial	L	L	L	4-line serial interface
	L	L	H	I^2C serial interface
	H	L	L	9 bit 3-line serial interface
Parallel	L	H	L	8bit 6800-series MPU mode
	L	H	H	8bit 8080-series MPU mode

7.1.3 Parallel Interface

The 8-bit bi-directional data bus is used in parallel interface and the type of MPU is selected by IF[2:0] as shown in **Table 2**. The data transfer type is determined by signals of A0, ERD and RWR as shown in **Table 3**.

Table 2 Microprocessor Selection for Parallel Interface

IF2	IF1	IF0	CSB	A0	ERD	RWR	D[7:0]	MPU Interface
L	H	L	CSB	A0	E	R/W	D[7:0]	6800-series
L	H	H			/RD	/WR		8080-series

Table 3 Parallel Data Transfer

Common	6800-series		8080-series		Description
A0	E (ERD)	R/W (RWR)	/RD (ERD)	/WR (RWR)	
H	H	H	L	H	Display data read out
H	H	L	H	L	Display data write
L	H	H	L	H	Internal status read
L	H	L	H	L	Writes to internal register (instruction)

Sitronix Confidential The information contained herein is the exclusive property of Sitronix and shall not be distributed, reproduced, or disclosed in whole or in part without prior written permission of Sitronix.

7.1.4 Setting Serial Interface

Interface	CSB	A0	ERD	RWR	D[7:0]
4-Line SPI	CSB	A0	---	---	D[0]= SCL, D[1:3]=SDA, D[4:7]= ---
3-Line SPI	CSB	---	---	---	D[0]= SCL, D[1:3]=SDA, D[4:7]= ---
I^2C interface	L	---	---	---	D[0]=SCL, D1=SDA_IN, D[3:2]=SDA_OUT, D[5:4]= ---, D[7:6]=SA[1:0]. Refer to I^2C interface.

* The un-used pins are marked as "---" and should be fixed to "H" by VDD1.

Note:

1. The option setting to be "H" should connect to VDD1.
2. The option setting to be "L" should connect to VSS1.

7.1.5 4-Line Serial Interface

ST75256 is active when CSB is "L", serial data (SDA) and serial clock (SCL) inputs are enabled. When CSB is "H", ST75256 is not active, the internal 8-bit shift register and 3-bit counter are reset. The DDRAM column address pointer will be increased by one automatically after writing each byte of DDRAM.

The display data/command indication is controlled by the register selection pin (A0). The signals transferred on data bus will be display data when A0 is high and will be instruction when A0 is low. Serial data (SDA) is latched at the rising edge of serial clock (SCL). After the 8th serial clock, the serial data will be processed as 8-bit parallel data. The DDRAM column address pointer will be increased by one automatically after each byte of DDRAM access.

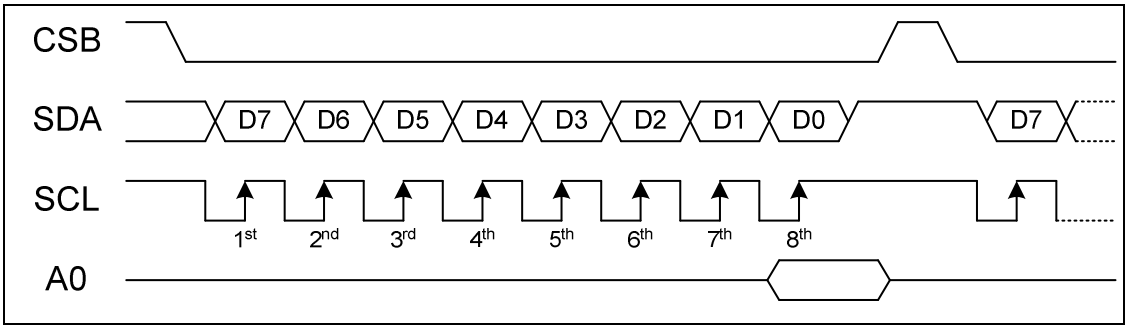

Figure 10 Write Operation of 4-Line SPI

Sitronix Confidential The information contained herein is the exclusive property of Sitronix and shall not be distributed, reproduced, or disclosed in whole or in part without prior written permission of Sitronix.

After entering the “Read Status” instruction to read IC status, the information is shifted out as shown below. CSB signal must be kept at “L” during this period. All read out data will be 8 bits.

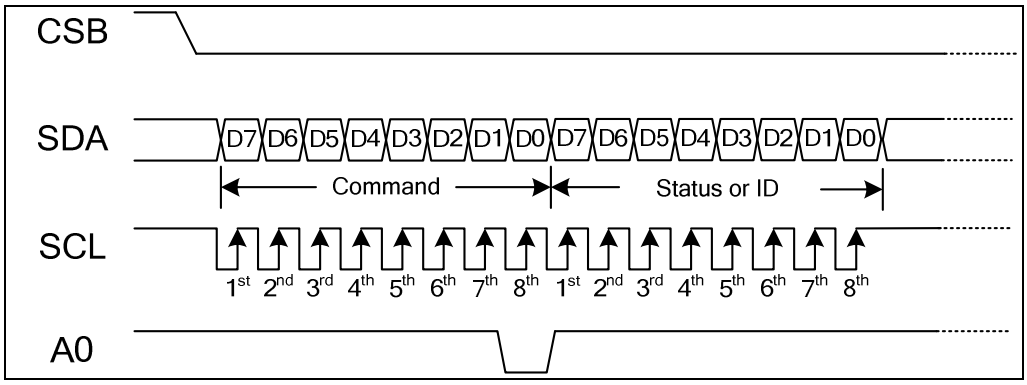

Figure 11 Read Operation of 4-Line SPI

7.1.6 3-Line Serial Interface

In 3-Line interface, A0 pin is not available. The 1st output bit defines command byte or parameter byte.

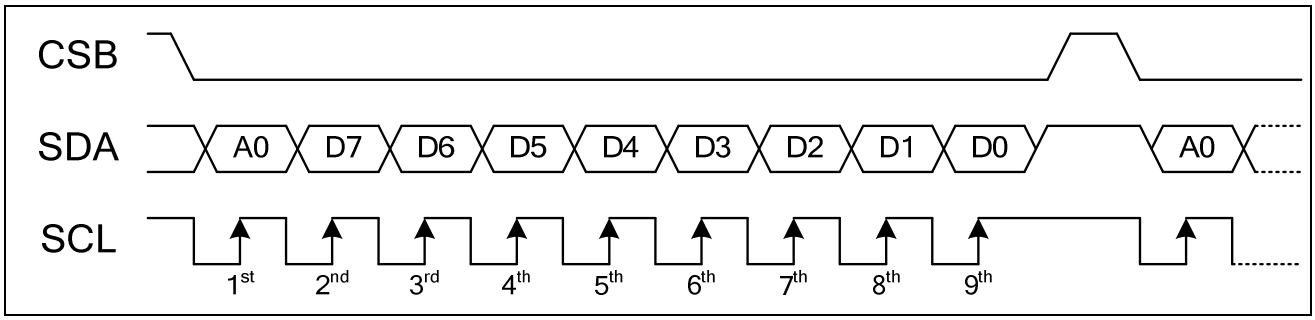

Figure 12 Write Operation of 3-Line SPI

After entering the “Read Status” instruction to read IC status, the information is shifted out as shown below. CSB signal must be kept at “L” during this period. All read out data will be 8 bits.

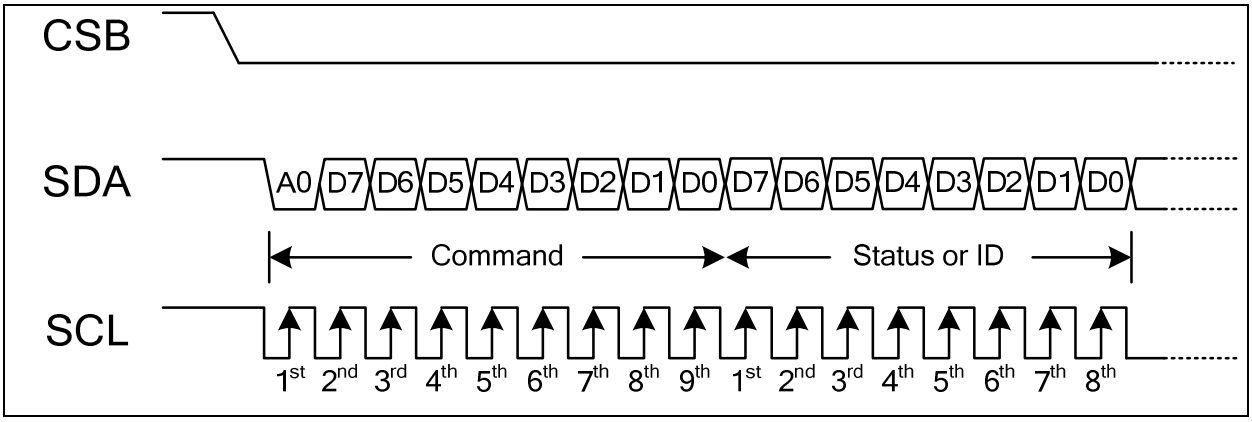

Figure 13 Read Operation of 3-Line SPI

Sitronix Confidential The information contained herein is the exclusive property of Sitronix and shall not be distributed, reproduced, or disclosed in whole or in part without prior written permission of Sitronix.

7.1.7 I²C Interface

The I²C Interface is for bi-directional, two-line communication between different ICs or modules. The two lines are a Serial Data line (SDA) and a Serial Clock line (SCL). Both lines must be connected with a pull-up resistor which drives SDA and SCL to high when the bus is not busy. Data transfer can be initiated only when the bus is not busy.

BIT TRANSFER

One data bit is transferred during each clock pulse. The data on the SDA line must remain stable during the HIGH period of the clock pulse because changes of SDA line at this time will be interpreted as START or STOP. Bit transfer is illustrated in **Figure 14**.

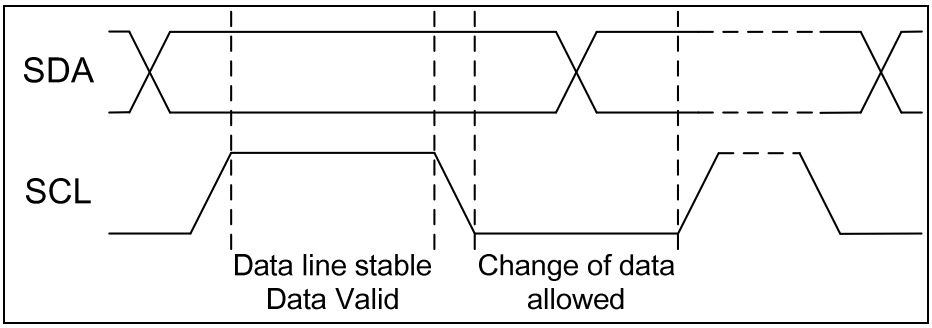

Figure 14 Bit Transfer

START AND STOP CONDITIONS

Both SDA and SCL lines remain HIGH when the bus is not busy. A HIGH-to-LOW transition of SDA, while SCL is HIGH is defined as the START condition (S). A LOW-to-HIGH transition of SDA while SCL is HIGH is defined as the STOP condition (P). The START and STOP conditions are illustrated in **Figure 15**.

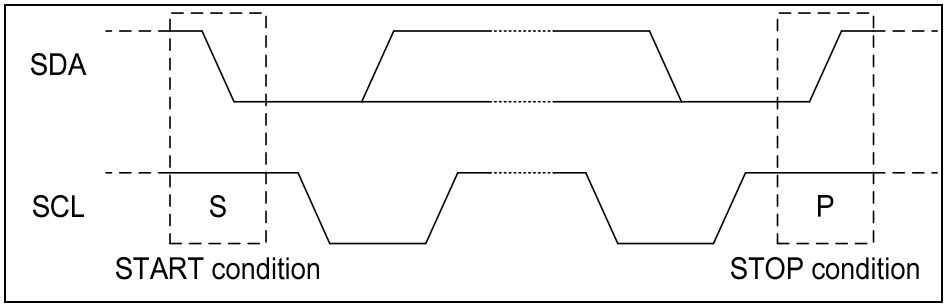

Figure 15 Definition of START and STOP Condition

Sitronix Confidential The information contained herein is the exclusive property of Sitronix and shall not be distributed, reproduced, or disclosed in whole or in part without prior written permission of Sitronix.

SYSTEM CONFIGURATION

The system configuration is illustrated in **Figure 16** and some word-definitions are explained below:

- Transmitter: the device which sends the data to the bus.
- Receiver: the device which receives the data from the bus.
- Master: the device which initiates a transfer generates clock signals and terminates a transfer.
- Slave: the device which is addressed by a master.
- Multi-Master: more than one master can attempt to control the bus at the same time without corrupting the message.
- Arbitration: the procedure to ensure that, if more than one master tries to control the bus simultaneously, only one is allowed to do so and the message is not corrupted.
- Synchronization: procedure to synchronize the clock signals of two or more devices.

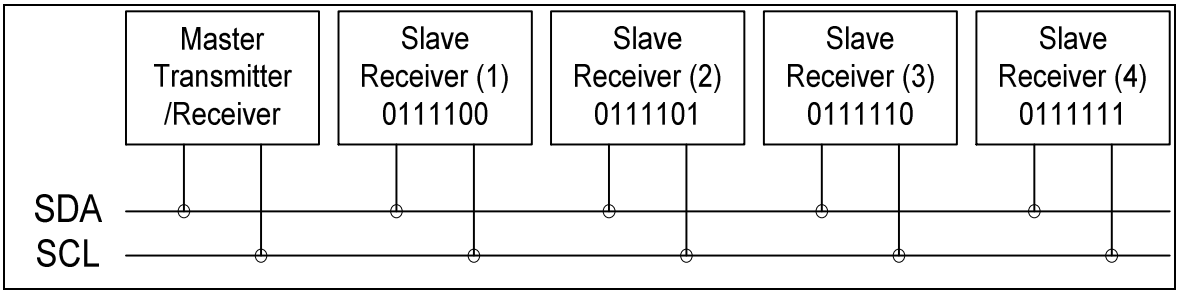

Figure 16 System Configuration

ACKNOWLEDGEMENT

Each byte of eight bits is followed by an acknowledge-bit. The acknowledge-bit is a HIGH signal put on SDA by the transmitter during the time when the master generates an extra acknowledge-related clock pulse. A slave receiver which is addressed must generate an acknowledge-bit after the reception of each byte. A master receiver must also generate an acknowledge-bit after the reception of each byte that has been clocked out of the slave transmitter. The device that acknowledges must pull-down the SDA line during the acknowledge-clock pulse, so that the SDA line is stable LOW during the HIGH period of the acknowledge-related clock pulse (set-up and hold times must be taken into consideration). A master receiver must signal an end-of-data to the slave transmitter by not generating an acknowledge-bit on the last byte that has been clocked out of the slave. In this event the transmitter must leave the data line HIGH to enable the master to generate a STOP condition. Acknowledgement on the I^2C Interface is illustrated in **Figure 17**.

Sitronix Confidential The information contained herein is the exclusive property of Sitronix and shall not be distributed, reproduced, or disclosed in whole or in part without prior written permission of Sitronix.

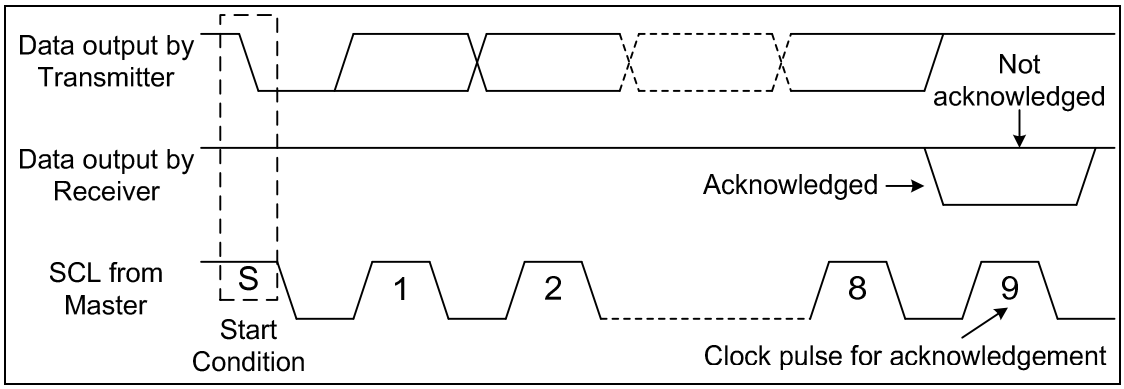

Figure 17 Acknowledgement of I²C Interface

I²C INTERFACE PROTOCOL

ST75256 supports command/data write to addressed slaves on the bus.

Before any data is transmitted on the I²C Interface, the device which should respond is addressed first. Four 7-bit slave addresses (01111**00**, 01111**01**, 01111**10** and 01111**11**) are reserved for ST75256. The least significant 2 bits of the slave address is set by connecting SA0 and SA1 to either logic 0 (VSS1) or logic 1 (VDD1).The I²C Interface protocol is illustrated in **Figure 18**.

The sequence is initiated with a START condition (S) from the I²C Interface master, which is followed by the slave address and A0. All slaves with the corresponding address acknowledge in parallel, all the others will ignore the I²C Interface transfer. After acknowledgement, one or more command or data words are followed and define the status of the addressed slaves.

The last control byte is tagged with a cleared most significant bit (i.e. the continuation bit Co). After a control byte with a cleared Co bit, only data byte(s) will follow. The state of the A0 bit defines whether the following data bytes are interpreted as commands or as RAM data. All addressed slaves on the bus also acknowledge the control and data bytes. After the last control byte either a series of display data bytes or command data bytes may follow (depending on the A0 bit setting).

If the A0 bit of the last control byte is set to logic 1, these data bytes (display data bytes) will be stored in the display RAM at the address specified by the internal data pointer. The data pointer is automatically updated and the data is directed to the intended ST75256 device.

If the A0 bit of the last control byte is set to logic 0, these data bytes (command data byte) will be decoded and the setting of ST75256 will be changed according to the received commands.

Only the addressed slave makes the acknowledgement after each byte. At the end of the transmission the bus master issues a STOP condition (P). If no acknowledge is generated by the master after a byte, the driver stops transferring data to the master.

Sitronix Confidential The information contained herein is the exclusive property of Sitronix and shall not be distributed, reproduced, or disclosed in whole or in part without prior written permission of Sitronix.

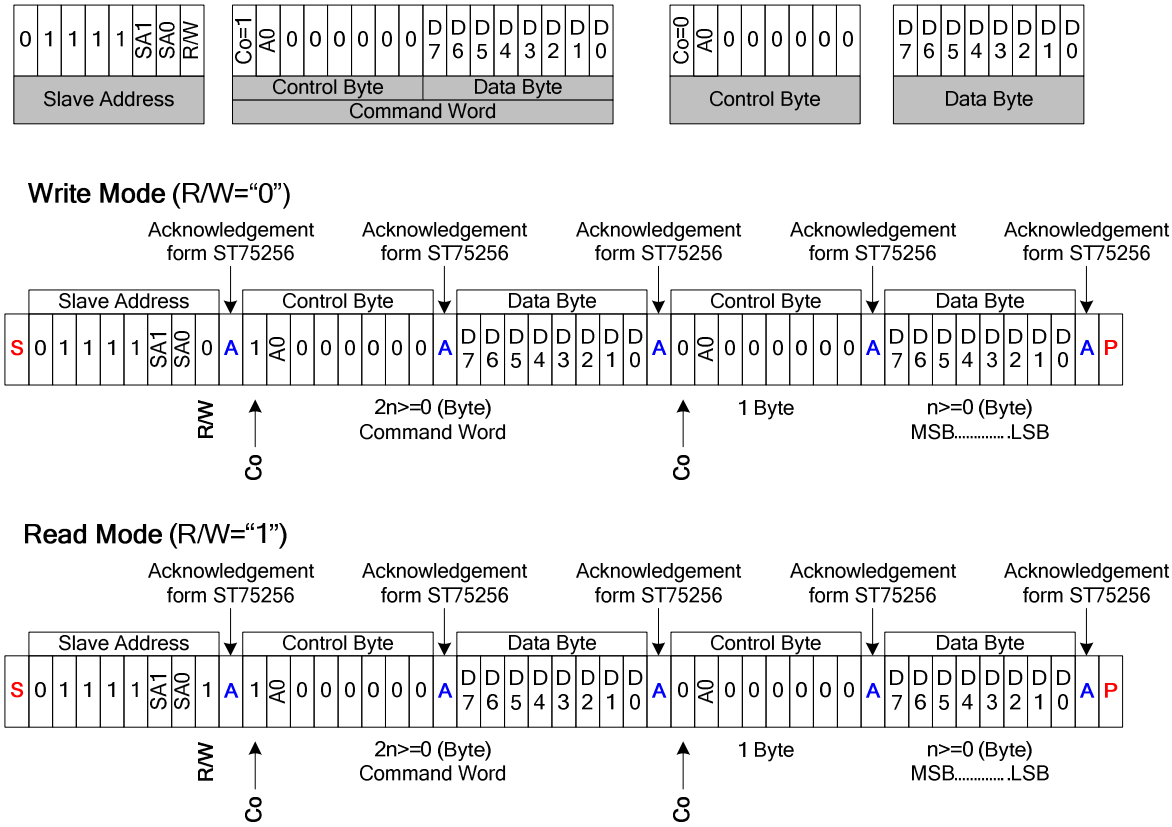

Figure 18 I²C Interface Protocol

Co	0	Last control byte. Only a stream of data bytes is allowed to follow. This stream may only be terminated by a STOP or RE-START condition.
	1	Another control byte will follow the data byte.

Sitronix Confidential The information contained herein is the exclusive property of Sitronix and shall not be distributed, reproduced, or disclosed in whole or in part without prior written permission of Sitronix.

7.2 Data Transfer

ST75256 uses bus holder and internal data bus for data transfer with MPU. When writing data from the MPU to on-chip RAM, data is automatically transferred from the bus holder to the RAM as shown in **Figure 19**. And when reading data from on-chip RAM to the MPU, the data for the initial read cycle is stored in the bus holder (dummy read) and the MPU reads this stored data from bus holder for the next data read cycle as shown in **Figure 20**. This means that a dummy read cycle must be inserted between each pair of address sets when a sequence of address sets is executed. Therefore, the data of the specified address cannot be output with the read display data instruction right after the address sets, but can be output at the second read of data.

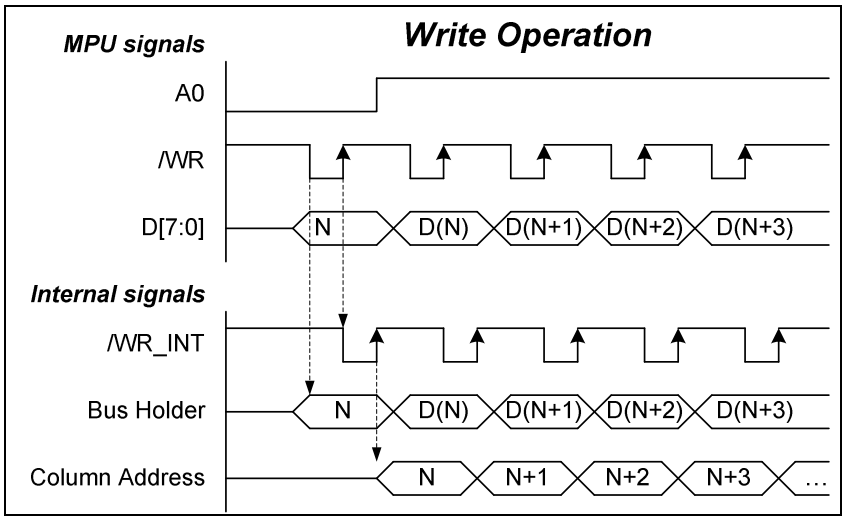

Figure 19 Data Transfer: Write

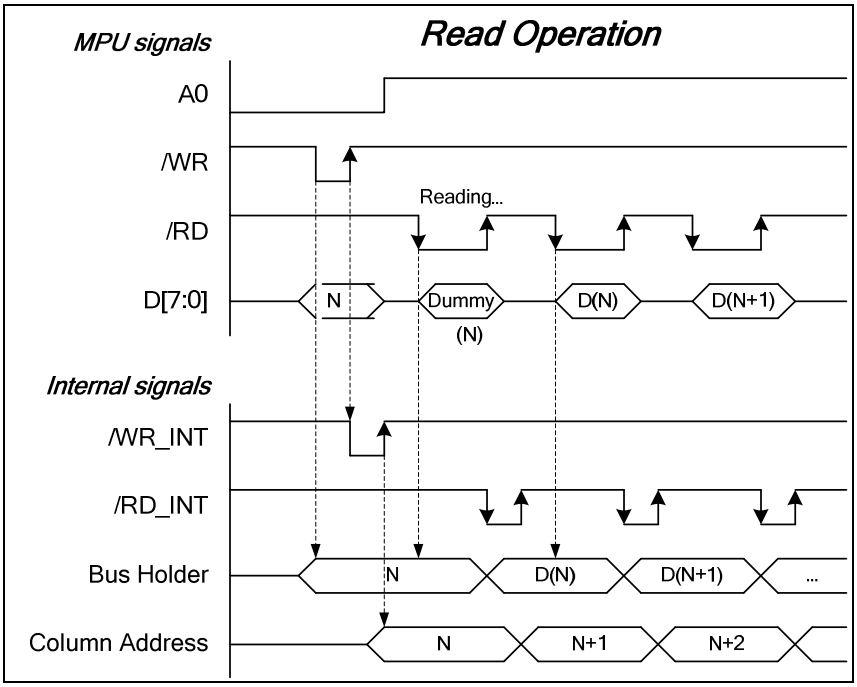

Figure 20 Data Transfer: Read

Sitronix Confidential The information contained herein is the exclusive property of Sitronix and shall not be distributed, reproduced, or disclosed in whole or in part without prior written permission of Sitronix.

7.3 Display Data RAM (DDRAM)

ST75256 containing a 256x163x2 bit static RAM stores the display data. The display data RAM (DDRAM) stores the pixel data of the LCD. The built-in DDRAM is an addressable memory array with 256 columns by 163 rows. ST75256 provides 2 kinds of display modes (4-Gray/Monochrome scale mode) and a fast-addressing mode for fast updating display data. Each page address represents different sub-COMs in different display mode. For example, in 4-Gray/Monochrome scale mode setting the page address to “00h” means that upcoming 8 bits data is addressing to COM0~COM3/COM0~COM7 (refer to **Figure 21**, **Figure 22**). The column address is directly related to the SEG output number. The LCD controller reads the pixel data in DDRAM, and then it outputs to COM/SEG pad. While the LCD controller operates independently, display data can be written into DDRAM at the same time and data is also being displayed on LCD panel without causing the abnormal display.

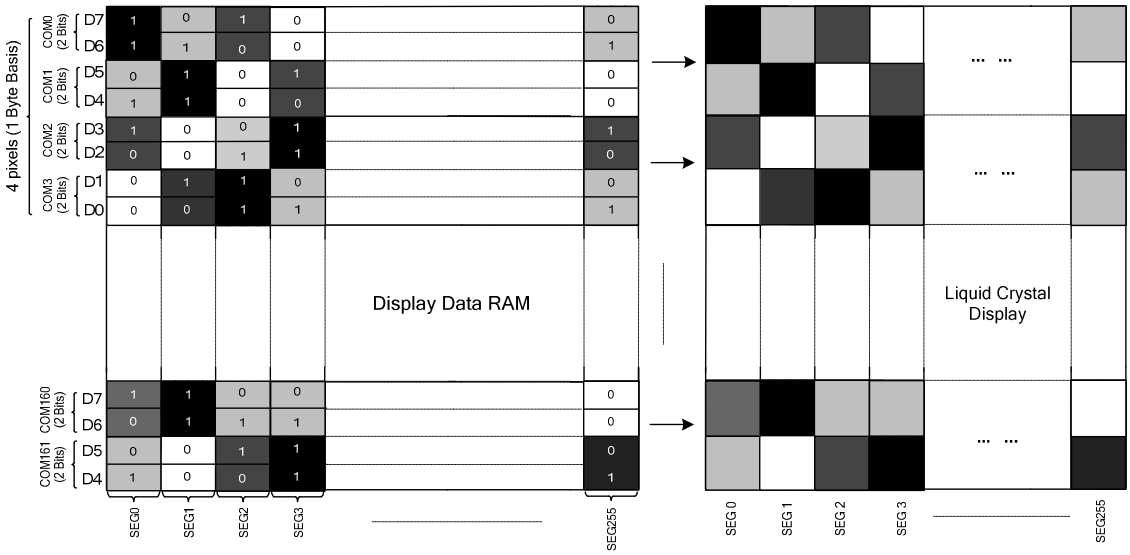

2 Bits Data N=0~3		DDRAM		LCD
D2N+1	D2N			
1	1	1	1	
0	0	0	0	
1	0	1	0	
0	1	0	1	

Figure 21 DDRAM Mapping (4-Level Gray Scale Mode)

Sitronix Confidential The information contained herein is the exclusive property of Sitronix and shall not be distributed, reproduced, or disclosed in whole or in part without prior written permission of Sitronix.

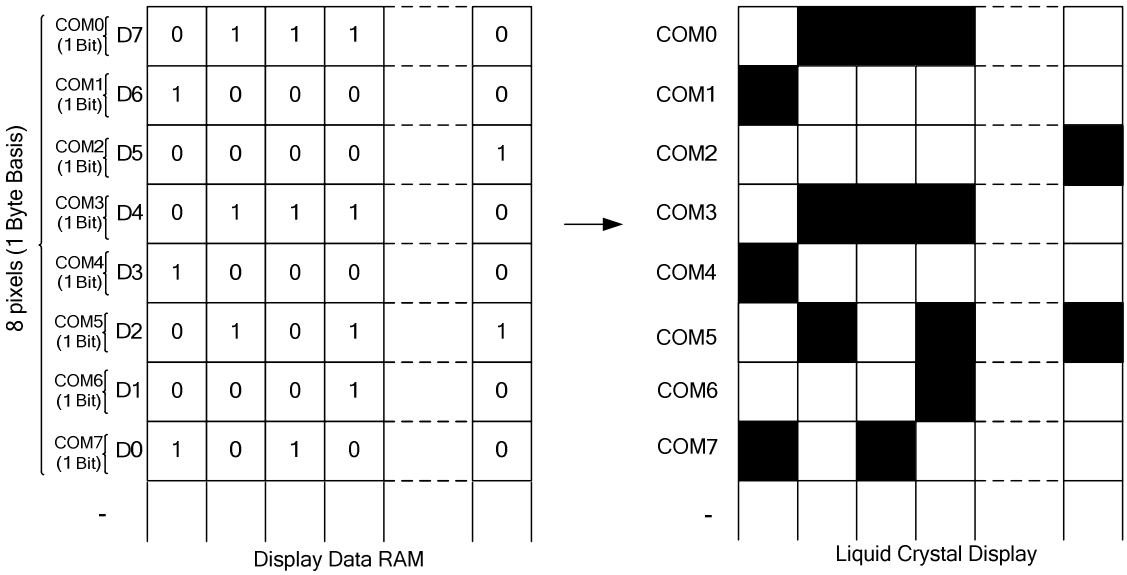

Figure 22 DDRAM Mapping (Monochrome Mode)

Sitronix Confidential The information contained herein is the exclusive property of Sitronix and shall not be distributed, reproduced, or disclosed in whole or in part without prior written permission of Sitronix.

7.3.1 Page Address Circuit

Use the set page address command and set column address command to specify DDRAM address to be accessed as shown in **Figure 27**~**Figure 30**. This circuit controls the address in the page direction when MPU accesses the DDRAM or read the DDRAM to display image on the LCD. When the page-direction scan is specified with “Data Scan Direction” command and the address are increased from the start up to the end page, the column address is increased by 1 and the page address returns to the start page.

In the READ operation, as the end page is reached, the column address is automatically increased by 1 and the page address returns to the start page.

User may inverse the correspondence between the DDRAM address and common output via the address normal/inverse parameter of “Data Scan Direction” command.

7.3.2 Column Address Circuit

This circuit is to control the address in the column direction when MPU accesses the DDRAM. When the column-direction scan is specified with “Data Scan Direction” command and the address are increased from the start up to the end column, the page address is increased by 1 and the column address returns to the start column.

In the READ operation, the column address is also automatically increased by 1 and returns to the start page as the end column is reached.

Just like the page address control circuit, users may inverse the correspondence between the DDRAM column address and segment output via the column address normal/inverse parameter of “Data Scan Direction” command. This arrangement makes the chip layout on the LCD module flexible.

7.3.3 I/O Buffer Circuit

It is the bi-directional buffer when MPU reads or writes the DDRAM. Since the READ or WRITE operation of MPU to DDRAM is performed independently from data output to the display data latch circuit, asynchronous access to the DDRAM while the LCD is turned on does not cause troubles such as flicking of the display images.

7.3.4 Display Data Latch Circuit

This circuit is used to temporarily hold display data to be output from the DDRAM to the SEG decoder circuit. Since display normal/inverse and display on/off commands are used to control data in the latch circuit alone, they do not modify data in the DDRAM.

Sitronix Confidential The information contained herein is the exclusive property of Sitronix and shall not be distributed, reproduced, or disclosed in whole or in part without prior written permission of Sitronix.

7.3.5 Data Orientation

By setting control flag “DO” (Refer to Data Format Select Command), the input Data written into DDRAM can have the LSB on top (DO=0, **Figure 23** & **Figure 25**) or at bottom (DO=1, **Figure 24** & **Figure 26**)

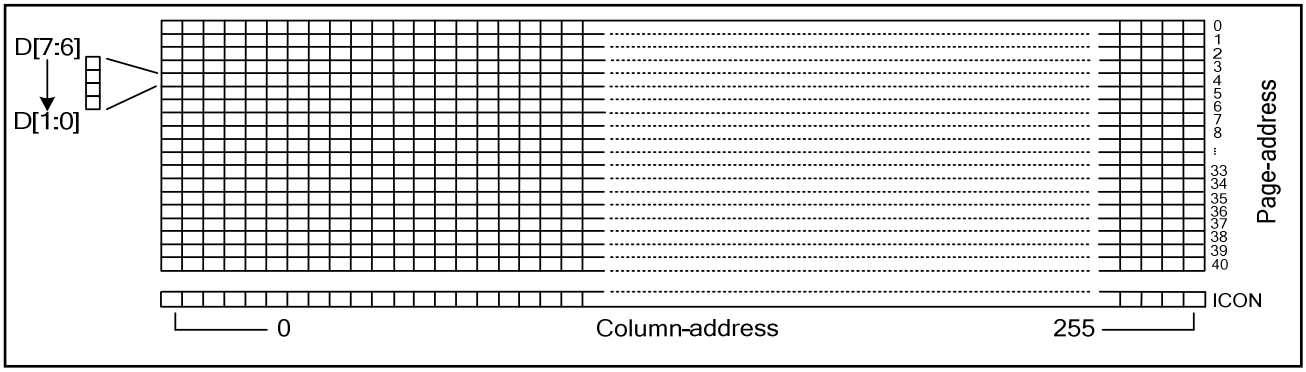

Figure 23 RAM Format and Addressing, if DO=0 (4-Level Gray Scale Mode)

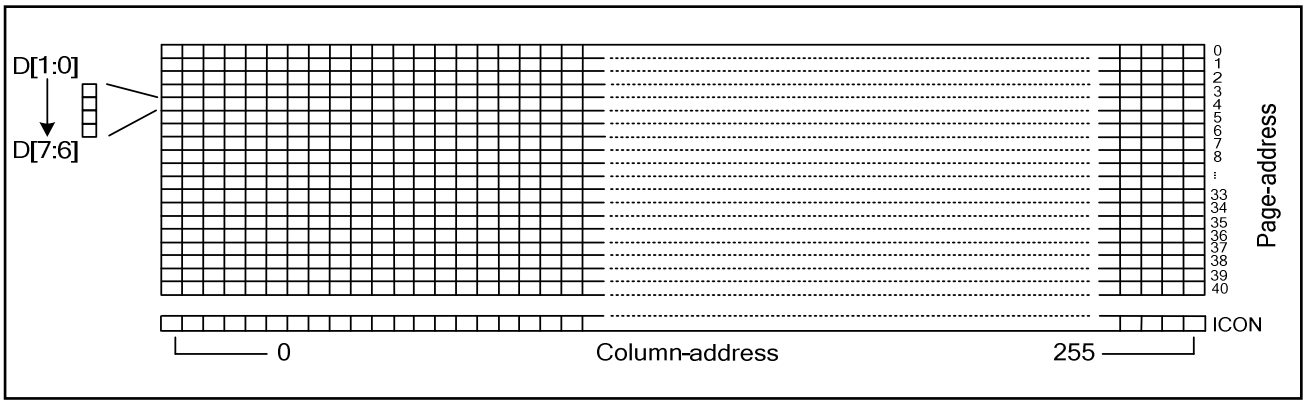

Figure 24 RAM Format and Addressing, if DO=1 (4-Level Gray Scale Mode)

Sitronix Confidential The information contained herein is the exclusive property of Sitronix and shall not be distributed, reproduced, or disclosed in whole or in part without prior written permission of Sitronix.

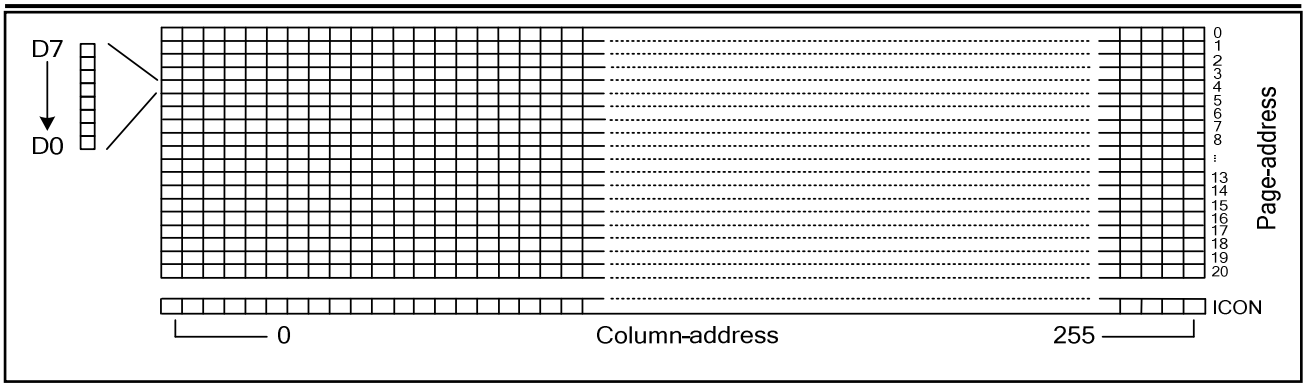

Figure 25 RAM Format and Addressing, if DO=0 (Monochrome Mode)

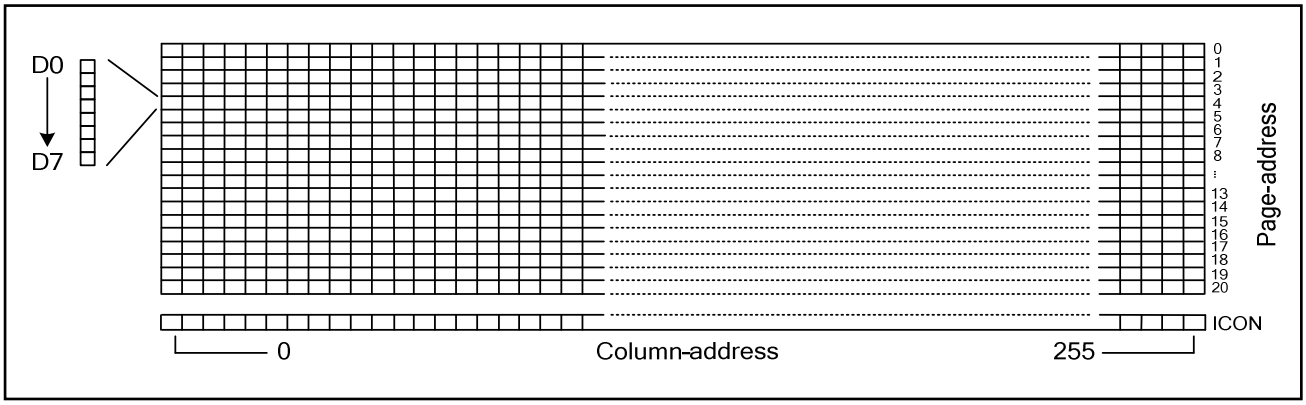

Figure 26 RAM Format and Addressing, if DO=1 (Monochrome Mode)

Sitronix Confidential The information contained herein is the exclusive property of Sitronix and shall not be distributed, reproduced, or disclosed in whole or in part without prior written permission of Sitronix.

7.3.6 DDRAM Map to LCD Driver Output

The internal relation between DDRAM and LCD driver circuit (SEG/COM output path) with different display setting (MX / MY, Data Format Select DO=0/1, Monochrome/4Gray and COMSCN=0/1) is illustrated below.

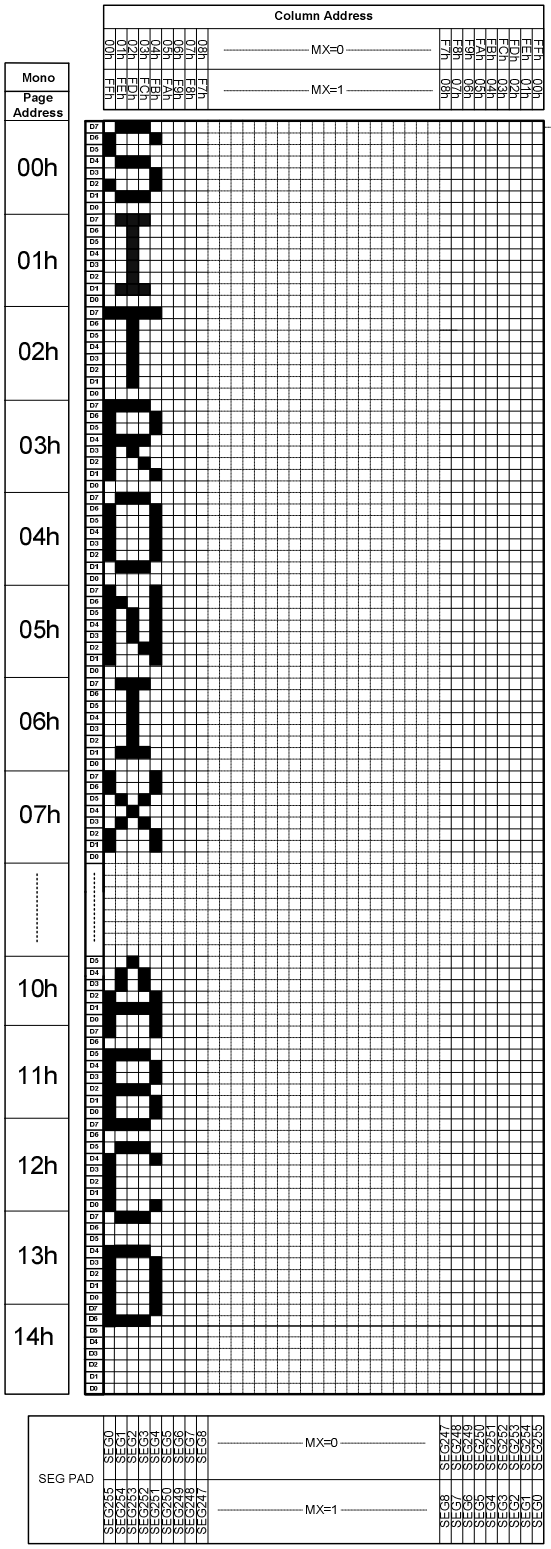

COM PAD			
DO=0	DO=1	DO=0	DO=1
COM0	COM7	COM160	X
COM1	COM6	COM161	X
COM2	COM5	X	X
COM3	COM4	X	X
COM4	COM3	X	X
COM5	COM2	X	X
COM6	COM1	X	COM161
COM7	COM0	X	COM160
COM8	COM15	COM152	COM159
COM9	COM14	COM153	COM158
COM10	COM13	COM154	COM157
COM11	COM12	COM155	COM156
COM12	COM11	COM156	COM155
COM13	COM10	COM157	COM154
COM14	COM9	COM158	COM153
COM15	COM8	COM159	COM152
COM16	COM23	COM144	COM151
COM17	COM22	COM145	COM150
COM18	COM21	COM146	COM149
COM19	COM20	COM147	COM148
COM20	COM19	COM148	COM147
COM21	COM18	COM149	COM146
COM22	COM17	COM150	COM145
COM23	COM16	COM151	COM144
COM24	COM31	COM136	COM143
COM25	COM30	COM137	COM142
COM26	COM29	COM138	COM141
COM27	COM28	COM139	COM140
COM28	COM27	COM140	COM139
COM29	COM26	COM141	COM138
COM30	COM25	COM142	COM137
COM31	COM24	COM143	COM136
COM32	COM39	COM128	COM135
COM33	COM38	COM129	COM134
COM34	COM37	COM130	COM133
COM35	COM36	COM131	COM132
COM36	COM35	COM132	COM131
COM37	COM34	COM133	COM130
COM38	COM33	COM134	COM129
COM39	COM32	COM135	COM128
COM40	COM47	COM120	COM127
COM41	COM46	COM121	COM126
COM42	COM45	COM122	COM125
COM43	COM44	COM123	COM124
COM44	COM43	COM124	COM123
COM45	COM42	COM125	COM122
COM46	COM41	COM126	COM121
COM47	COM40	COM127	COM120
COM48	COM55	COM112	COM119
COM49	COM54	COM113	COM118
COM50	COM53	COM114	COM117
COM51	COM52	COM115	COM116
COM52	COM51	COM116	COM115
COM53	COM50	COM117	COM114
COM54	COM49	COM118	COM113
COM55	COM48	COM119	COM112
COM56	COM63	COM104	COM111
COM57	COM62	COM105	COM110
COM58	COM61	COM106	COM109
COM59	COM60	COM107	COM108
COM60	COM59	COM108	COM107
COM61	COM58	COM109	COM106
COM62	COM57	COM110	COM105
COM63	COM56	COM111	COM104
⋮	⋮	⋮	⋮
MY=0	MY=0	MY=1	MY=1
⋮	⋮	⋮	⋮
COM130	COM133	COM34	COM37
COM131	COM132	COM35	COM36
COM132	COM131	COM36	COM35
COM133	COM130	COM37	COM34
COM134	COM129	COM38	COM33
COM135	COM128	COM39	COM32
COM136	COM143	COM24	COM31
COM137	COM142	COM25	COM30
COM138	COM141	COM26	COM29
COM139	COM140	COM27	COM28
COM140	COM139	COM28	COM27
COM141	COM138	COM29	COM26
COM142	COM137	COM30	COM25
COM143	COM136	COM31	COM24
COM144	COM151	COM16	COM23
COM145	COM150	COM17	COM22
COM146	COM149	COM18	COM21
COM147	COM148	COM19	COM20
COM148	COM147	COM20	COM19
COM149	COM146	COM21	COM18
COM150	COM145	COM22	COM17
COM151	COM144	COM23	COM16
COM152	COM159	COM8	COM15
COM153	COM158	COM9	COM14
COM154	COM157	COM10	COM13
COM155	COM156	COM11	COM12
COM156	COM155	COM12	COM11
COM157	COM154	COM13	COM10
COM158	COM153	COM14	COM9
COM159	COM152	COM15	COM8
COM160	X	COM0	COM7
COM161	X	COM1	COM6
X	X	COM2	COM5
X	X	COM3	COM4
X	X	COM4	COM3
X	X	COM5	COM2
X	COM161	COM6	COM1
X	COM160	COM7	COM0

Figure 27 DDRAM Display Direction (Monochrome Mode; COMSCN=0)

Sitronix Confidential The information contained herein is the exclusive property of Sitronix and shall not be distributed, reproduced, or disclosed in whole or in part without prior written permission of Sitronix.

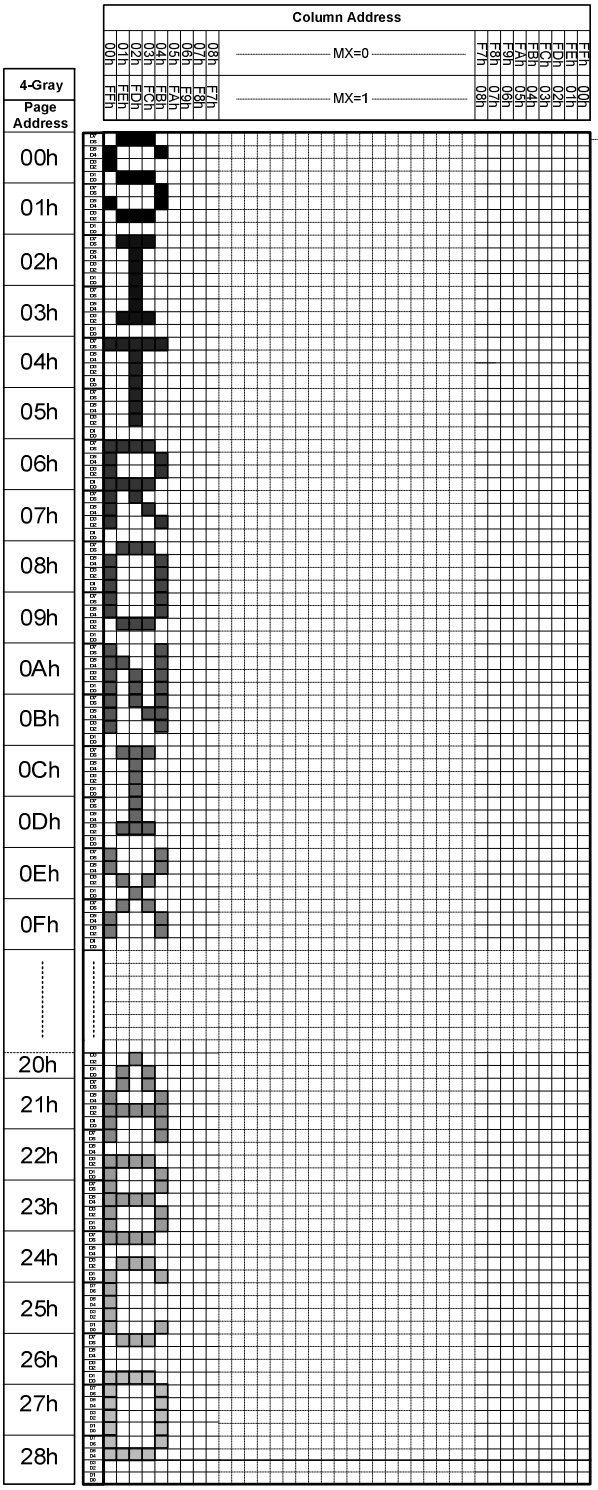

COM PAD			
DO=0	DO=1	DO=0	DO=1
COM0	COM3	COM160	X
COM1	COM2	COM161	X
COM2	COM1	X	COM161
COM3	COM0	X	COM160
COM4	COM7	COM156	COM159
COM5	COM6	COM157	COM158
COM6	COM5	COM158	COM157
COM7	COM4	COM159	COM156
COM8	COM11	COM152	COM155
COM9	COM10	COM153	COM154
COM10	COM9	COM154	COM153
COM11	COM8	COM155	COM152
COM12	COM15	COM148	COM151
COM13	COM14	COM149	COM150
COM14	COM13	COM150	COM149
COM15	COM12	COM151	COM148
COM16	COM19	COM144	COM147
COM17	COM18	COM145	COM146
COM18	COM17	COM146	COM145
COM19	COM16	COM147	COM144
COM20	COM23	COM140	COM143
COM21	COM22	COM141	COM142
COM22	COM21	COM142	COM141
COM23	COM20	COM143	COM140
COM24	COM27	COM136	COM139
COM25	COM26	COM137	COM138
COM26	COM25	COM138	COM137
COM27	COM24	COM139	COM136
COM28	COM31	COM132	COM135
COM29	COM30	COM133	COM134
COM30	COM29	COM134	COM133
COM31	COM28	COM135	COM132
COM32	COM35	COM128	COM131
COM33	COM34	COM129	COM130
COM34	COM33	COM130	COM129
COM35	COM32	COM131	COM128
COM36	COM39	COM124	COM127
COM37	COM38	COM125	COM126
COM38	COM37	COM126	COM125
COM39	COM36	COM127	COM124
COM40	COM43	COM120	COM123
COM41	COM42	COM121	COM122
COM42	COM41	COM122	COM121
COM43	COM40	COM123	COM120
COM44	COM47	COM116	COM119
COM45	COM46	COM117	COM118
COM46	COM45	COM118	COM117
COM47	COM44	COM119	COM116
COM48	COM51	COM112	COM115
COM49	COM50	COM113	COM114
COM50	COM49	COM114	COM113
COM51	COM48	COM115	COM112
COM52	COM55	COM108	COM111
COM53	COM54	COM109	COM110
COM54	COM53	COM110	COM109
COM55	COM52	COM111	COM108
COM56	COM59	COM104	COM107
COM57	COM58	COM105	COM106
COM58	COM57	COM106	COM105
COM59	COM56	COM107	COM104
COM60	COM63	COM100	COM103
COM61	COM62	COM101	COM102
COM62	COM61	COM102	COM101
COM63	COM60	COM103	COM100
⋮	⋮	⋮	⋮
MY=0	MY=0	MY=1	MY=1
⋮	⋮	⋮	⋮
COM130	COM129	COM34	COM33
COM131	COM128	COM35	COM32
COM132	COM135	COM28	COM31
COM133	COM134	COM29	COM30
COM134	COM133	COM30	COM29
COM135	COM132	COM31	COM28
COM136	COM139	COM24	COM27
COM137	COM138	COM25	COM26
COM138	COM137	COM26	COM25
COM139	COM136	COM27	COM24
COM140	COM143	COM20	COM23
COM141	COM142	COM21	COM22
COM142	COM141	COM22	COM21
COM143	COM140	COM23	COM20
COM144	COM147	COM16	COM19
COM145	COM146	COM17	COM18
COM146	COM145	COM18	COM17
COM147	COM144	COM19	COM16
COM148	COM151	COM12	COM15
COM149	COM150	COM13	COM14
COM150	COM149	COM14	COM13
COM151	COM148	COM15	COM12
COM152	COM155	COM8	COM11
COM153	COM154	COM9	COM10
COM154	COM153	COM10	COM9
COM155	COM152	COM11	COM8
COM156	COM159	COM4	COM7
COM157	COM158	COM5	COM6
COM158	COM157	COM6	COM5
COM159	COM156	COM7	COM4
COM160	X	COM0	COM3
COM161	X	COM1	COM2
X	COM161	COM2	COM1
X	COM160	COM3	COM0

Figure 28 DDRAM Display Direction (4-Level Gray Scale Mode; COMSCN=0)

Sitronix Confidential The information contained herein is the exclusive property of Sitronix and shall not be distributed, reproduced, or disclosed in whole or in part without prior written permission of Sitronix.

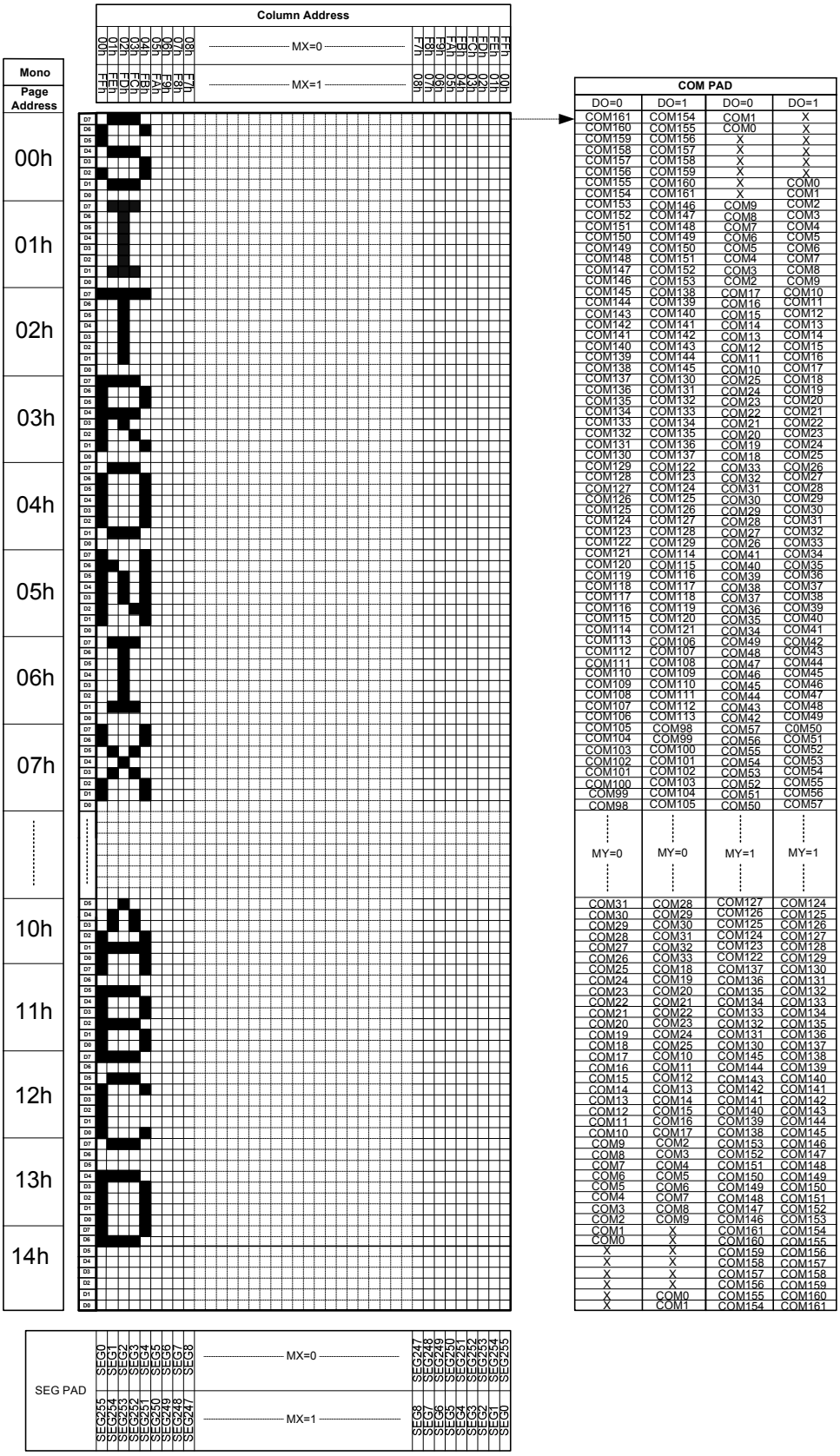

Figure 29 DDRAM Display Direction (Monochrome Mode; COMSCN=1)

Sitronix Confidential The information contained herein is the exclusive property of Sitronix and shall not be distributed, reproduced, or disclosed in whole or in part without prior written permission of Sitronix.

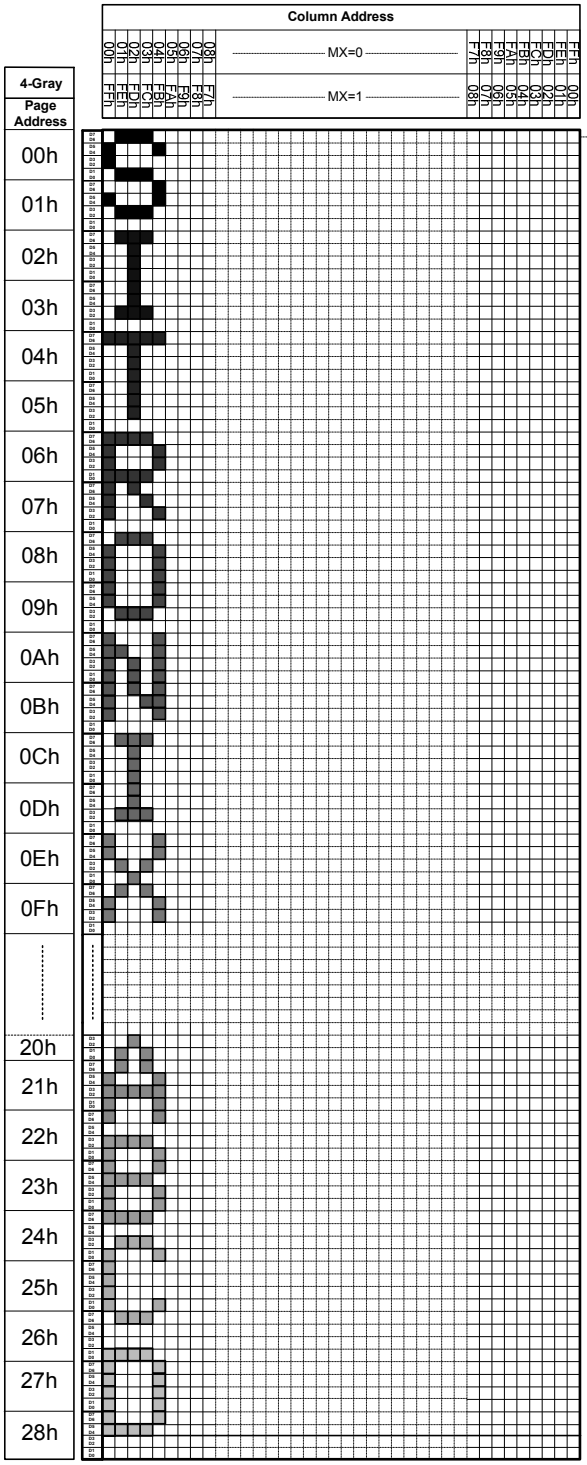

COM PAD			
DO=0	DO=1	DO=0	DO=1
COM161	COM158	COM1	X
COM160	COM159	COM0	X
COM159	COM160	X	COM0
COM158	COM161	X	COM1
COM157	COM154	COM5	COM2
COM156	COM155	COM4	COM3
COM155	COM156	COM3	COM4
COM154	COM157	COM2	COM5
COM153	COM150	COM9	COM6
COM152	COM151	COM8	COM7
COM151	COM152	COM7	COM8
COM150	COM153	COM6	COM9
COM149	COM146	COM13	COM10
COM148	COM147	COM12	COM11
COM147	COM148	COM11	COM12
COM146	COM149	COM10	COM13
COM145	COM142	COM17	COM14
COM144	COM143	COM16	COM15
COM143	COM144	COM15	COM16
COM142	COM145	COM14	COM17
COM141	COM138	COM21	COM18
COM140	COM139	COM20	COM19
COM139	COM140	COM19	COM20
COM138	COM141	COM18	COM21
COM137	COM134	COM25	COM22
COM136	COM135	COM24	COM23
COM135	COM136	COM23	COM24
COM134	COM137	COM22	COM25
COM133	COM130	COM29	COM26
COM132	COM131	COM28	COM27
COM131	COM132	COM27	COM28
COM130	COM133	COM26	COM29
COM129	COM126	COM33	COM30
COM128	COM127	COM32	COM31
COM127	COM128	COM31	COM32
COM126	COM129	COM30	COM33
COM125	COM122	COM37	COM34
COM124	COM123	COM36	COM35
COM123	COM124	COM35	COM36
COM122	COM125	COM34	COM37
COM121	COM118	COM41	COM38
COM120	COM119	COM40	COM39
COM119	COM120	COM39	COM40
COM118	COM121	COM38	COM41
COM117	COM114	COM45	COM42
COM116	COM115	COM44	COM43
COM115	COM116	COM43	COM44
COM114	COM117	COM42	COM45
COM113	COM110	COM49	COM46
COM112	COM111	COM48	COM47
COM111	COM112	COM47	COM48
COM110	COM113	COM46	COM49
COM109	COM106	COM53	COM50
COM108	COM107	COM52	COM51
COM107	COM108	COM51	COM52
COM106	COM109	COM50	COM53
COM105	COM102	COM57	COM54
COM104	COM103	COM56	COM55
COM103	COM104	COM55	COM56
COM102	COM105	COM54	COM57
COM101	COM98	COM61	COM58
COM100	COM99	COM60	COM59
COM99	COM100	COM59	COM60
COM98	COM101	COM58	COM61
⋮	⋮	⋮	⋮
MY=0	MY=0	MY=1	MY=1
⋮	⋮	⋮	⋮
COM31	COM32	COM127	COM128
COM30	COM33	COM126	COM129
COM29	COM26	COM133	COM130
COM28	COM27	COM132	COM131
COM27	COM28	COM131	COM132
COM26	COM29	COM130	COM133
COM25	COM22	COM137	COM134
COM24	COM23	COM136	COM135
COM23	COM24	COM135	COM136
COM22	COM25	COM134	COM137
COM21	COM18	COM141	COM138
COM20	COM19	COM140	COM139
COM19	COM20	COM139	COM140
COM18	COM21	COM138	COM141
COM17	COM14	COM145	COM142
COM16	COM15	COM144	COM143
COM15	COM16	COM143	COM144
COM14	COM17	COM142	COM145
COM13	COM10	COM149	COM146
COM12	COM11	COM148	COM147
COM11	COM12	COM147	COM148
COM10	COM13	COM146	COM149
COM9	COM6	COM153	COM150
COM8	COM7	COM152	COM151
COM7	COM8	COM151	COM152
COM6	COM9	COM150	COM153
COM5	COM2	COM157	COM154
COM4	COM3	COM156	COM155
COM3	COM4	COM155	COM156
COM2	COM5	COM154	COM157
COM1	X	COM161	COM158
COM0	X	COM160	COM159
X	COM0	COM159	COM160
X	COM1	COM158	COM161

Figure 30 DDRAM Display Direction (4-Level Gray Scale Mode; COMSCN=1)

Sitronix Confidential The information contained herein is the exclusive property of Sitronix and shall not be distributed, reproduced, or disclosed in whole or in part without prior written permission of Sitronix.

7.3.7 Set ICON

The internal relation between ICON DDRAM and LCD driver circuit (SEG/ICON output path) with different MX setting is illustrated below. Please ensure to write B/W data to ICON DDRAM in 4 gray scale mode.

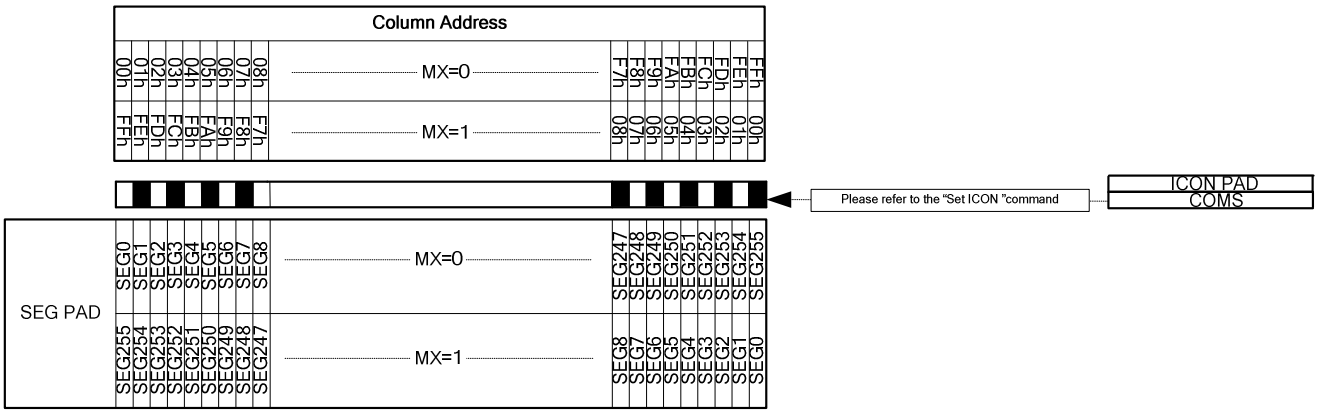

Figure 31 ICON DDRAM Display Direction

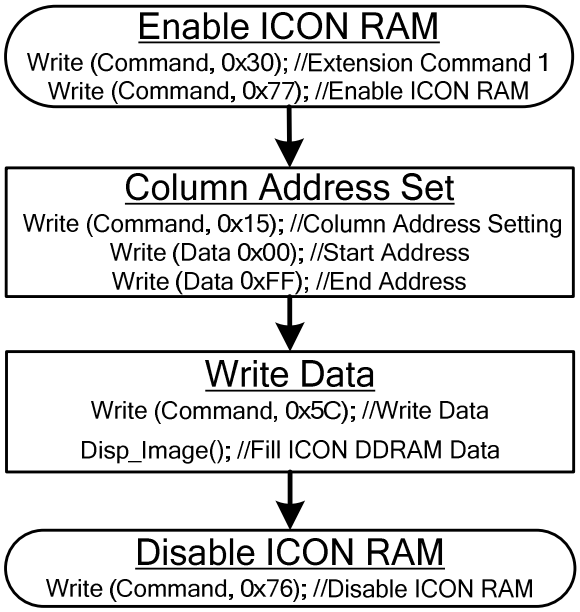

Figure 32 Command Sequence for Set ICON

Sitronix Confidential The information contained herein is the exclusive property of Sitronix and shall not be distributed, reproduced, or disclosed in whole or in part without prior written permission of Sitronix.

7.3.8 Partial Display

This function is defining the visible display area as illustrated in Figure 33. The different partial display area setting will be changing frame rate or Vop to avoid abnormal display. This mode consumes less current than the whole screen display and is suitable for the equipment in the standby state. If the partial display region is out of the maximum display range, it will be no operation.

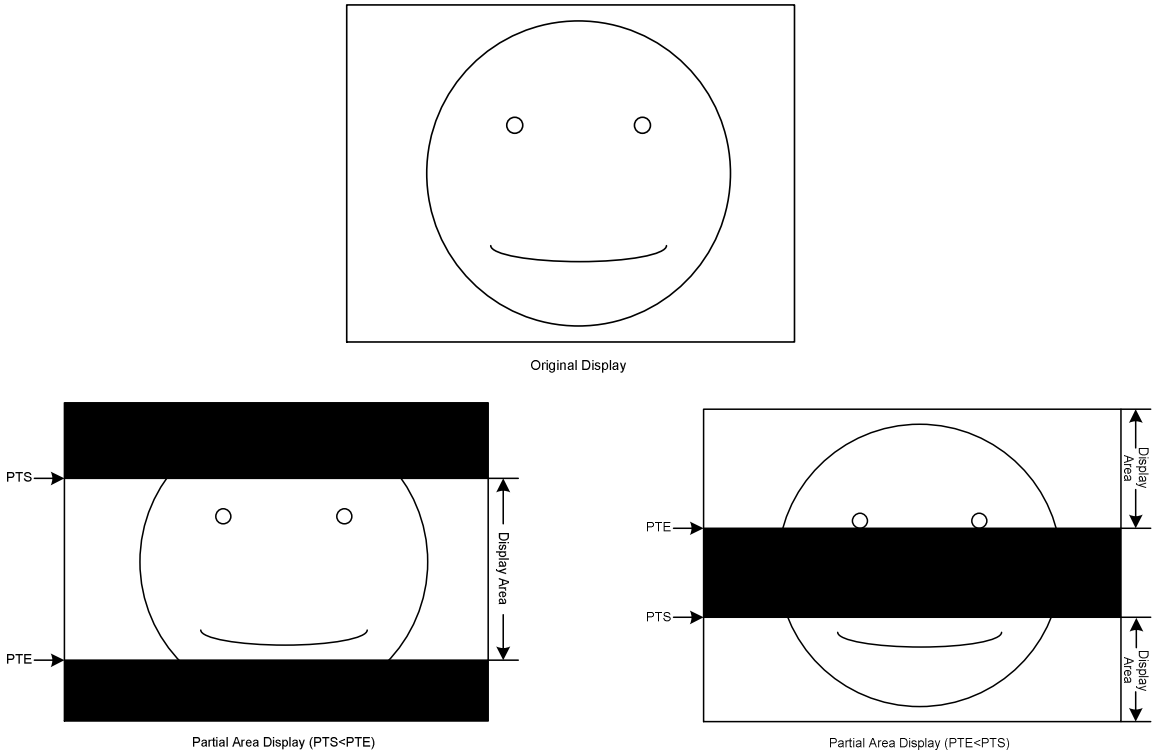

Figure 33 Partial Display Definition

7.3.9 Area Scroll Display

The user may scroll the display screen partially in any one of the following four scroll pattern via partial mode

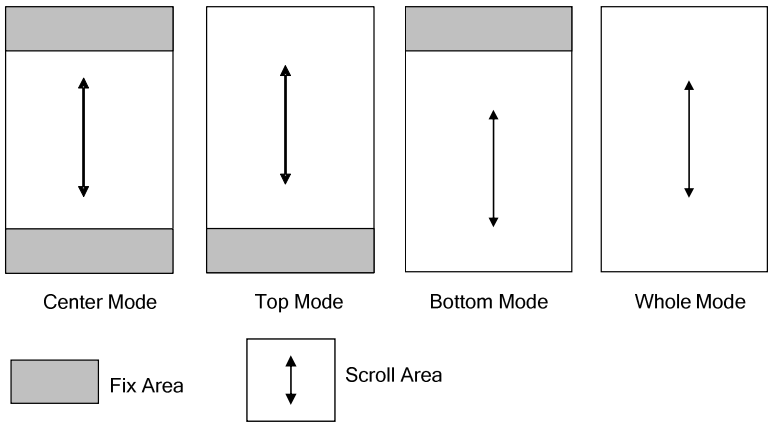

Figure 34 Scroll Definition

Sitronix Confidential The information contained herein is the exclusive property of Sitronix and shall not be distributed, reproduced, or disclosed in whole or in part without prior written permission of Sitronix.

7.3.10 Partial Display Application with COMSCN

The relation between display output and different COMSCN setting is shown below. **The partial duty layout must be pulled from COM0 to COMx(partial duty)**. The following illustration for partial duty equal to 64 duties and the related setting on COMSCN please refer to Section 6.2 Driver Output Pins.

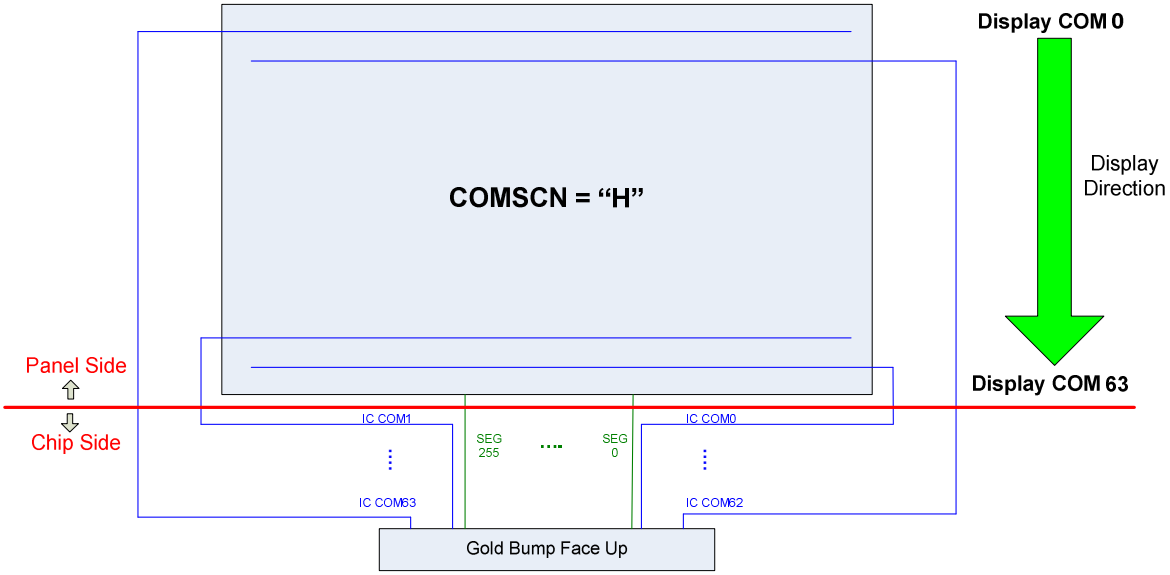

Figure 35 64 duty and COMSCN = H

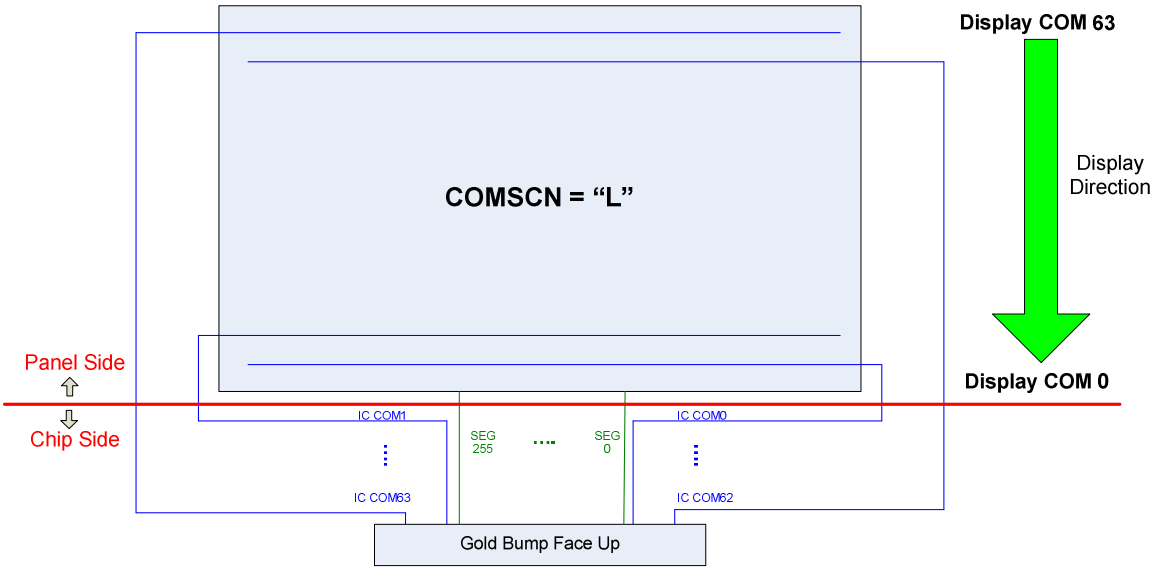

Figure 36 64 duty and COMSCN = L

Sitronix Confidential The information contained herein is the exclusive property of Sitronix and shall not be distributed, reproduced, or disclosed in whole or in part without prior written permission of Sitronix.

7.4 Liquid Crystal Driver Power Circuit

The built-in power circuits generate the voltage levels which are necessary to drive the liquid crystal. It consumes low power with the fewest external component. The built-in power system has voltage booster, voltage regulator and voltage follower circuits. Before power ST75256 is OFF, a Power OFF procedure is needed. Please refer to the OPERATION FLOW selection.

7.4.1 External Component of Power Circuit

The recommended external power components need only three capacitors. The detailed values of these three capacitors are determined by panel size and loading.

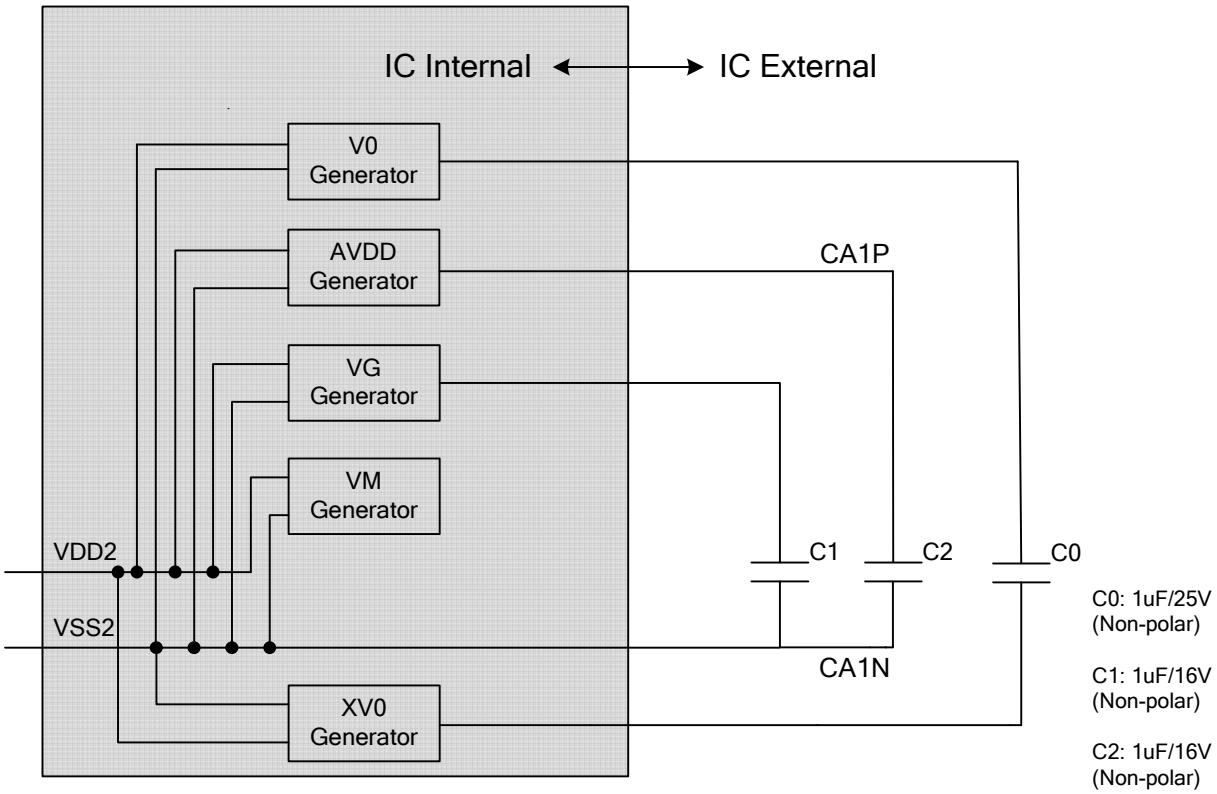

Figure 37 Internal Power Supply Circuit

Note:

1. C0: 1uF/25V~2.2uF/25V (Default 1uF/25V)
2. C1: 1uF/16V~2.2uF/16V (Default 1uF/16V)
3. C2: 1uF/16V~2.2uF/16V (Default 1uF/16V)

Sitronix Confidential The information contained herein is the exclusive property of Sitronix and shall not be distributed, reproduced, or disclosed in whole or in part without prior written permission of Sitronix.

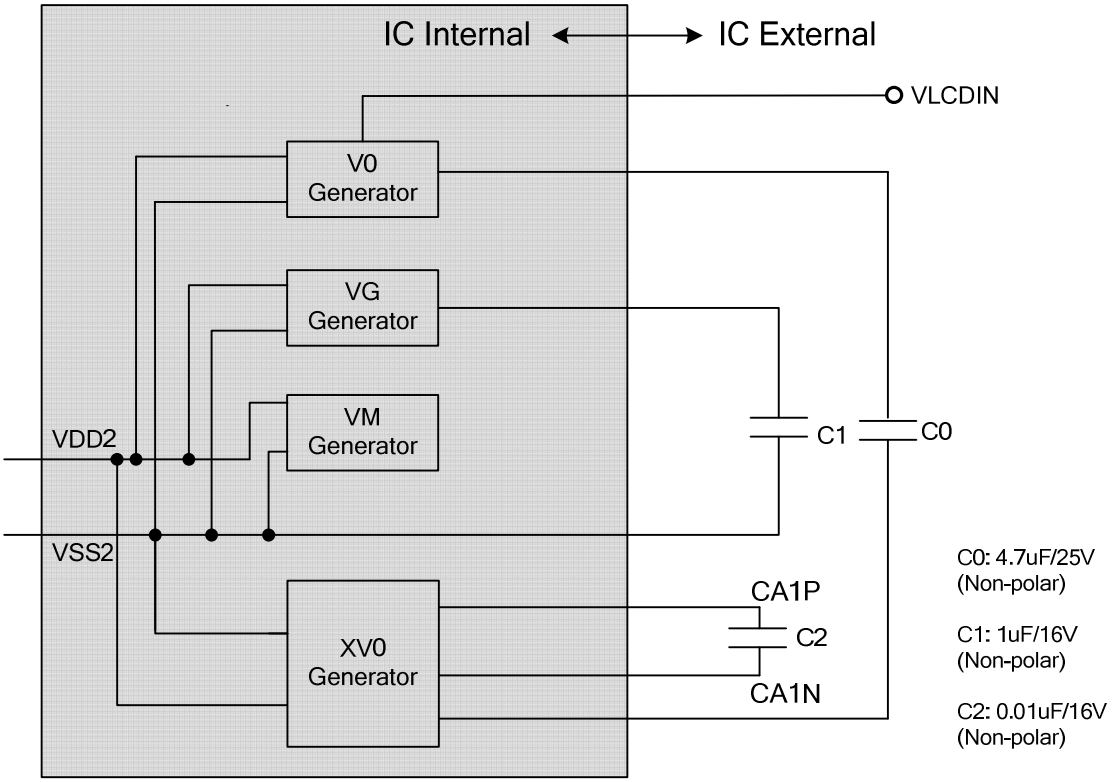

Figure 38 External Power Supply Circuit

Note:

1. C0: 2.2uF/25V~4.7uF/25V (Default 4.7uF/25V)
2. C1: 1uF/16V~2.2uF/16V (Default 1uF/16V)
3. C2: 0.01uF/16V~0.022uF/16V (Default 0.01uF/16V)

7.4.2 Voltage Regulator Circuits

The set Vop function is to program the optimum LCD supply voltage V0.

- **SET Vop (Temperature = 24℃)**

The V0 value is programmed via the Vop[8:0] register.

V0 = a + Vop[8:0] x b

Ex: Vop[5:0]=000001, Vop[8:6]=100

→ Vop[8:0]=100000001

→ 3.6+257x0.04=13.88

where **a** is a fixed constant value 3.6, **b** is a fixed constant value 0.04, Vop[8:0] is the programmed **V0** value with programming range from 85 to 360 (55_{HEX} to 168_{HEX}), and Vop[5:0] is the set contrast value which can be set via the interface and is in two's complement format.(See command

Sitronix Confidential The information contained herein is the exclusive property of Sitronix and shall not be distributed, reproduced, or disclosed in whole or in part without prior written permission of Sitronix.

Vop Control)

The Vop[8:0] value must be in the V0 programming range as given in **Figure 39**.

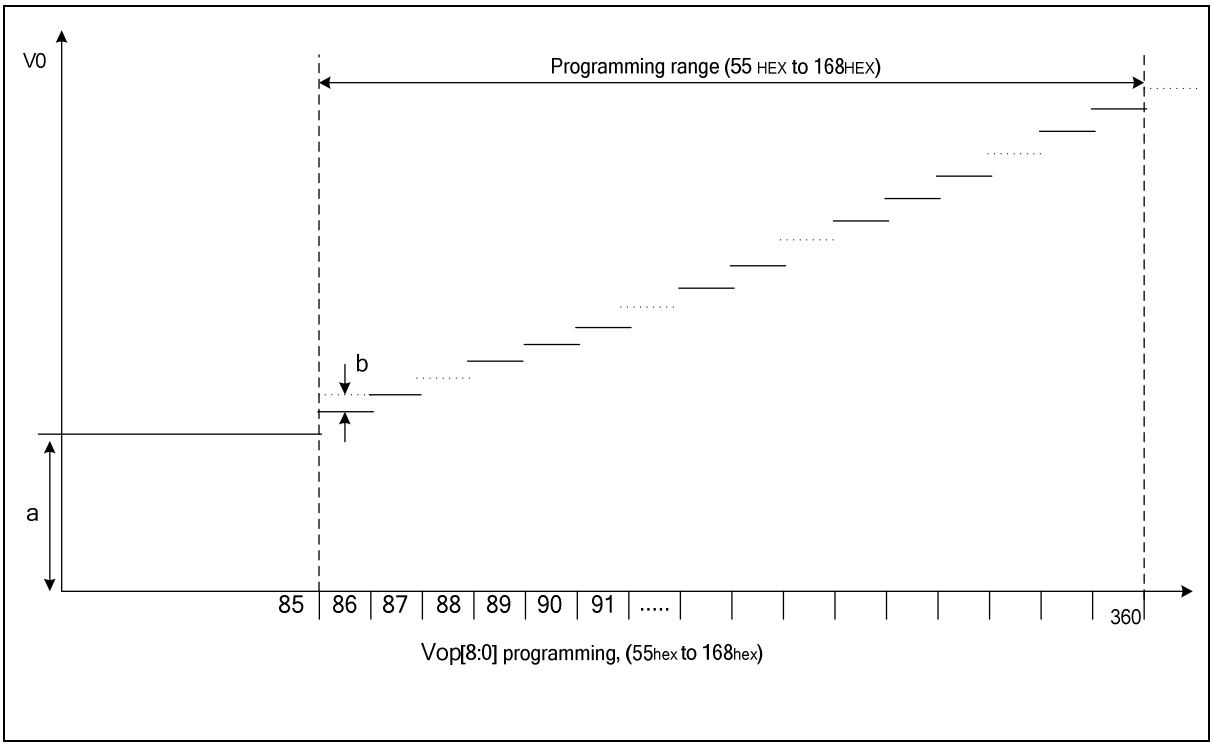

Figure 39 V0 Programming Range

Although the programming range for the internally generated V0 allows values above the maximum allowed V0, the customer has to ensure setting the Vop[8:0] register and selecting the temperature compensation under all condition and including all tolerances that the maximum allowed V0 (18V) will never be exceeded.

- **V0 Restriction**

Because VG should larger than 1.8V, V0 value should be higher than 1.8 x Bias / 2 (V) and lower than 18V. V0 value outside the available range is undefined. User has to ensure while selecting the temperature compensation that under all conditions and including all tolerances that V0 voltage remains in the range.

Sitronix Confidential The information contained herein is the exclusive property of Sitronix and shall not be distributed, reproduced, or disclosed in whole or in part without prior written permission of Sitronix.

7.5 Temperature Gradient Selection Circuit

7.5.1 SET V0 with temperature compensation (Temperature ≠ 24℃)

There are 16-line slopes in each temperature step, and customer can select one line slope of temperature compensation coefficient for each temperature step. Each temperature step is 8℃. Please see **Figure 40** as below.

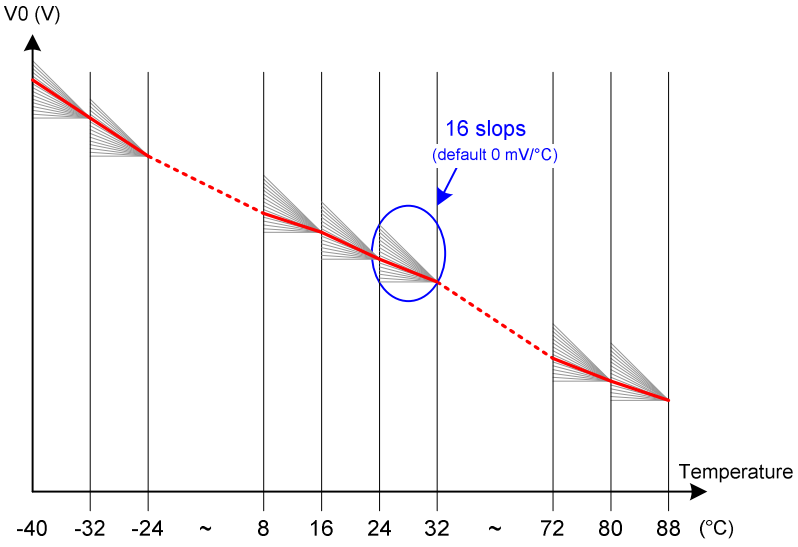

Figure 40 Temperature Compensation Coefficient Selection

In instruction Temperature Gradient Compensation each parameter MTx, where x=0, 1, 2,…, E, F has a setting value between 0 and 15. MTx=0 results in Mx=0V increment on V0, MTx=1 results in Mx=5mV increment,…, MTx=15 results in Mx=15x5mV=75mV increment. Note that each MTx individually corresponds to a temperature interval; the Mx means temperature gradient slope coefficient. The relations between Mx and V0 quantity due to temperature V0(T) are described in the equation shown in **Table 4**.

Sitronix Confidential The information contained herein is the exclusive property of Sitronix and shall not be distributed, reproduced, or disclosed in whole or in part without prior written permission of Sitronix.

Temperature Range	Equation V0(T) at temperature=T℃
-40℃ ≦ T < -32℃	V0(T) = V0(T24) + (-32 - T) x M0 + (M1 + M2 + M3 + M4 + M5 + M6 + M7) x 8
-32℃ ≦ T < -24℃	V0(T) = V0(T24) + (-24 - T) x M1 + (M2 + M3 + M4 + M5 + M6 + M7) x 8
-24℃ ≦ T < -16℃	V0(T) = V0(T24) + (-16 - T) x M2 + (M3 + M4 + M5 + M6 + M7) x 8
-16℃ ≦ T < -8℃	V0(T) = V0(T24) + (-8 - T) x M3 + (M4 + M5 + M 6 + M7) x 8
-8℃ ≦ T < 0℃	V0(T) = V0(T24) + (0 - T) x M4 + (M5 + M6 + M7) x 8
0℃ ≦ T < 8℃	V0(T) = V0(T24) + (8 - T) x M5 + (M6 + M7) x 8
8℃ ≦ T < 16℃	V0(T) = V0(T24) + (16 - T) x M6 + M7 x 8
16℃ ≦ T < 24℃	V0(T) = V0(T24) + (24 - T) x M7
24℃ ≦ T < 32℃	V0(T) = V0(T24) - (T - 24) x M8
32℃ ≦ T < 40℃	V0(T) = V0(T24) - (T - 32) x M9 – M8 x 8
40℃ ≦ T < 48℃	V0(T) = V0(T24) - (T - 40) x M10 – (M9 + M8) x 8
48℃ ≦ T < 56℃	V0(T) = V0(T24) - (T - 48) x M11 – (M10 + M9 + M8) x 8
56℃ ≦ T < 64℃	V0(T) = V0(T24) - (T - 56) x M12 – (M11 + M10 + M9 + M8) x 8
64℃ ≦ T < 72℃	V0(T) = V0(T24) - (T - 64) x M13 – (M12 + M11 + M10 + M9 + M8) x 8
72℃ ≦ T < 80℃	V0(T) = V0(T24) - (T - 72) x M14 – (M13 + M12 + M11 + M10 + M9 + M8) x 8
80℃ ≦ T < 88℃	V0(T) = V0(T24) - (T - 80) x M15 – (M14 + M13 + M12 + M11 + M10 + M9 + M8) x 8

Table 4 Equation V0(T) at Different Temperature

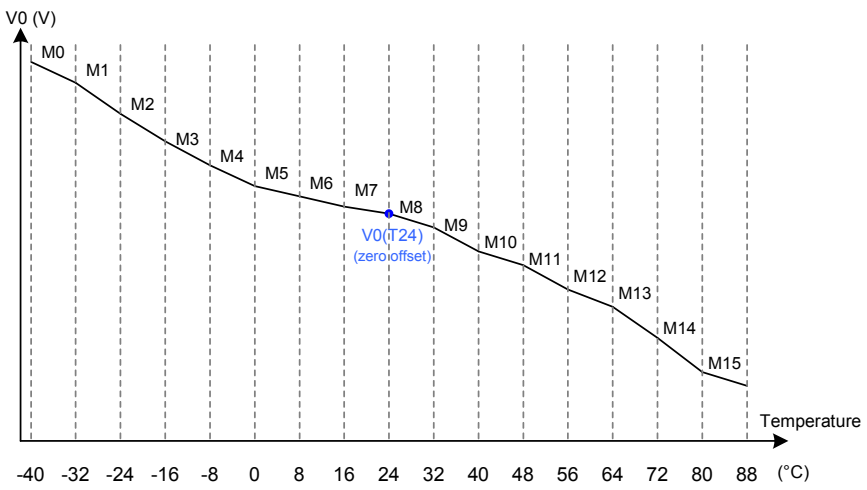

Figure 41 Temperature Gradient Compensation

Note:

- Please make sure to avoid any kind of heating source near ST75256 such as back light, to prevent Vop is not anticipative because of temperature compensation circuit is working.

Sitronix Confidential The information contained herein is the exclusive property of Sitronix and shall not be distributed, reproduced, or disclosed in whole or in part without prior written permission of Sitronix.

7.6 Frequency Temperature Gradient Compensation Coefficient

7.6.1 Register Loading Detection

ST75256 will auto-switch frame rate in different temperature such as TA, TB and TC are frame rate switching temperature which can be defined by customer with instruction Temperature Range. FRA, FRB, FRC and FRD are switched frame rate which also can be defined by customer with instruction Frame Rate. The frame rate range is from 5Hz to153Hz.

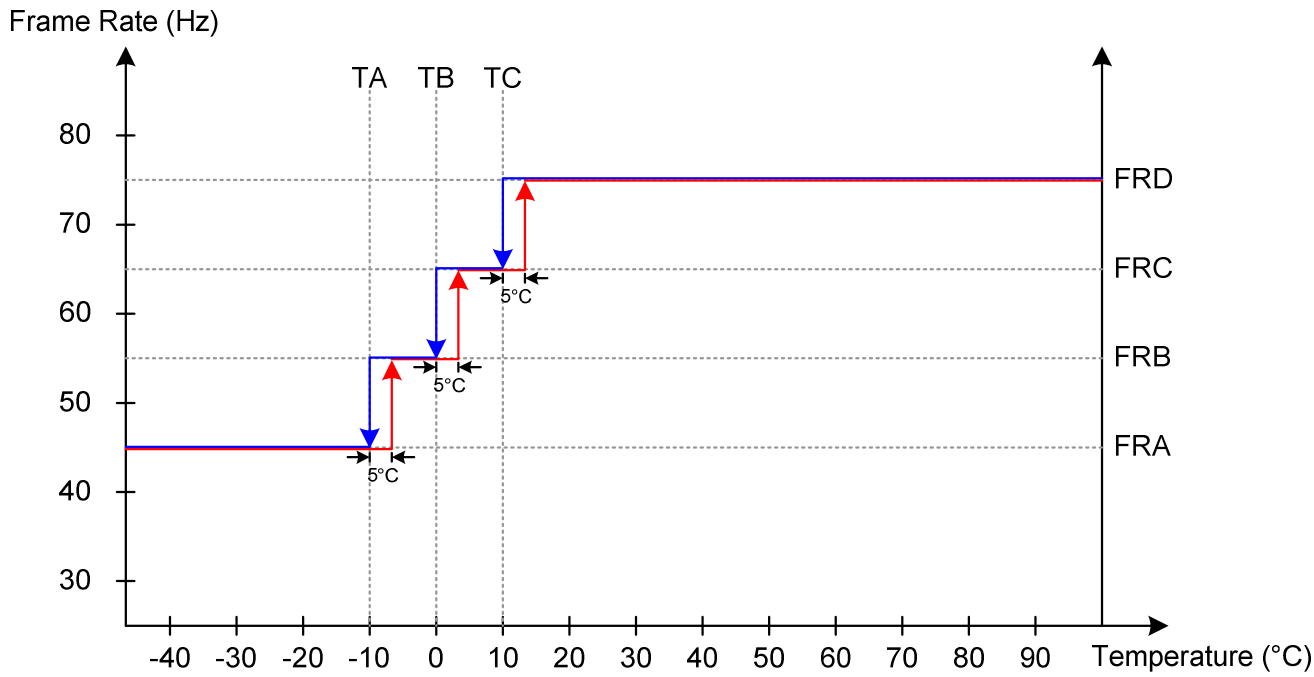

Figure 42 Frame Rate

Sitronix Confidential The information contained herein is the exclusive property of Sitronix and shall not be distributed, reproduced, or disclosed in whole or in part without prior written permission of Sitronix.

8 RESET CIRCUIT

Setting RSTB pin to “L” can initialize internal function. While RSTB is “L”, no instruction can be accepted. RSTB pin must connect to the reset pin of MPU and initialization by RSTB pin is essential before operating. After power-on, RAM data are undefined and the display status is “Display OFF”. It’s better to initialize whole DDRAM (ex: fill all 00h or write a display pattern) before turning the Display ON.

The default values of registers are listed below:

Procedure		Hardware Reset
DDRAM Content		No Change
Extension Command		EXT[1:0]=[0, 0]
Display ON/OFF		Display OFF
Normal/Inverse Display		Normal
ALL Pixel ON/OFF		ALL Pixel OFF
Setting CL Dividing Ratio		Not Divide
Duty Setting		DT[7:0]=00h
N-Line Inversion		Frame Inversion
N-Line Inversion Mode		FI=0h
Power Save Mode		Sleep in Mode
Page Address	Start Address	00h
	End Address	00h
Column Address	Start Address	00h
	End Address	00h
Address Scan Direction		Column Direction
Normal/Reverse Direction of the Line Address		Normal
Normal/Reverse Direction of the Column Address		Normal
Partial In	Start Address	00h
	End Address	00h
Read Modify Write		Disable
Scroll Area	Top Line Address	00h
	Bottom Line Address	A1h
	Number of Specified Lines	A1h
Scroll Area Mode		Whole Screen Scroll
Start Line		00h
OSC ON/OFF		OSC OFF
Power Control		VB=0, VR=0, VF=0

Sitronix Confidential The information contained herein is the exclusive property of Sitronix and shall not be distributed, reproduced, or disclosed in whole or in part without prior written permission of Sitronix.

Procedure	Hardware Reset
Set Vop	Vop[8:0]=000h
Vop Control	VOL=0
Read Register Mode	REG=0
Data Format Select	DO=0; LSB on Bottom
Display Mode	Mono
Set ICON	Disable
Set Master/Slave	Master
Set Gray Level	GL[4:0]=0Ch, GD[4:0]=12h
Booster Efficiency Set	BE[1:0]=01h
BIAS	1/12
Booster Level	X10
Driving Select	Internal
Auto Read Control	XARD=0
OTP WR/RD Control	WR/RD=0
OTP Selection Control	Ctrl=0
Frame Rate	FRA[4:0]=00h, FRB[4:0]=03h, FRC[4:0]=0Dh, FRD[4:0]=1Bh
Temperature Range	TA[6:0]=0Fh, TB[6:0]=28h, TC[6:0]=5Ah
Temperature Gradient Compensation	MT0[3:0]=0Fh, MT1[3:0]=07h, MT2[3:0]=02h, MT3[3:0]=02h, MT4[3:0]=01h, MT5[3:0]=01h, MT6[3:0]=02h, MT7[3:0]=00h, MT8[3:0]=00h, MT9[3:0]=00h, MTA[3:0]=02h, MTB[3:0]=03h, MTC[3:0]=02h, MTD[3:0]=08h, MTE[3:0]=06h, MTF[3:0]=0Bh
Enable OTP	Disable

Table 5 The Default Values of Registers

Sitronix Confidential The information contained herein is the exclusive property of Sitronix and shall not be distributed, reproduced, or disclosed in whole or in part without prior written permission of Sitronix.

9 COMMAND

9.1 INSTRUCTION TABLE

INSTRUCTION	A0	R/W	COMMAND BYTE								DESCRIPTION
			D7	D6	D5	D4	D3	D2	D1	D0	
1.Extension Command	0	0	0	0	1	1	EXT1	0	0	EXT0	Set extension instruction
Ext[1:0]=0,0 (Extension Command 1)											
2.Display ON/OFF	0	0	1	0	1	0	1	1	1	DSP	Set LCD display DSP=0: Display off DSP=1: Display on
3.Inverse Display	0	0	1	0	1	0	0	1	1	INV	Set inverse display INV=0: Normal display INV=1: Inverse display
4.All Pixel ON/OFF	0	0	0	0	1	0	0	0	1	AP	Set all pixel on mode, only for monochrome display AP=0: All pixel off mode AP=1: All pixel on mode
5.Display Control	0	0	1	1	0	0	1	0	1	0	Set display control CLD :Set CL dividing ratio DT[7:0] : Set the number of duty LF[4:0] : Set N-line inversion counter FI : Set the inversion type of frame at the end of common scan cycle
	1	0	0	0	0	0	0	CLD	0	0	
	1	0	DT7	DT6	DT5	DT4	DT3	DT2	DT1	DT0	
	1	0	0	0	LF4	FI	LF3	LF2	LF1	LF0	
6.Power Save	0	0	1	0	0	1	0	1	0	SLP	Set power save mode SLP=0: Sleep out mode SLP=1: Sleep in mode
7.Set Page Address	0	0	0	1	1	1	0	1	0	1	Set page address Starting page address: 00h≦YS≦28h Ending page address: YS≦YE≦28h
	1	0	YS7	YS6	YS5	YS4	YS3	YS2	YS1	YS0	
	1	0	YE7	YE6	YE5	YE4	YE3	YE2	YE1	YE0	
8.Set Column Address	0	0	0	0	0	1	0	1	0	1	Set column address Starting column address: 00h≦XS≦FFh Ending column address: XS≦XE≦FFh
	1	0	XS7	XS6	XS5	XS4	XS3	XS2	XS1	XS0	
	1	0	XE7	XE6	XE5	XE4	XE3	XE2	XE1	XE0	
9.Data Scan Direction	0	0	1	0	1	1	1	1	0	0	Set normal/ inverse display of address and address scan direction
	1	0	0	0	0	0	0	MV	MX	MY	
10.Write Data	0	0	0	1	0	1	1	1	0	0	Write data to DDRAM
	1	0	D7	D6	D5	D4	D3	D2	D1	D0	
11.Read Data	0	0	0	1	0	1	1	1	0	1	Read data from DDRAM (Only for parallel interface and I^2C)
	1	1	D7	D6	D5	D4	D3	D2	D1	D0	
12.Partial In	0	0	1	0	1	0	1	0	0	0	Set partial area Starting partial display address: 00h≦PTS≦A1h Ending partial display address:
	1	0	PTS7	PTS6	PTS5	PTS4	PTS3	PTS2	PTS1	PTS0	

Sitronix Confidential The information contained herein is the exclusive property of Sitronix and shall not be distributed, reproduced, or disclosed in whole or in part without prior written permission of Sitronix.

INSTRUCTION	A0	R/W	COMMAND BYTE								DESCRIPTION
			D7	D6	D5	D4	D3	D2	D1	D0	
	1	0	PTE7	PTE6	PTE5	PTE4	PTE3	PTE2	PTE1	PTE0	00h≦PTE≦A1h
13.Partial Out	0	0	1	0	1	0	1	0	0	1	Exit the partial mode
14.Read/Modify/Write In	0	0	1	1	1	0	0	0	0	0	Enable read modify write
15.Read/Modify/Write Out	0	0	1	1	1	0	1	1	1	0	Disable read modify write
16.Scroll Area	0	0	1	0	1	0	1	0	1	0	Set scroll area TL[7:0] : Set top line address BL[7:0] : Set bottom line address NSL[7:0] : Number of specified line SCM[1:0] : Area scroll mode
	1	0	TL7	TL6	TL5	TL4	TL3	TL2	TL1	TL0	
	1	0	BL7	BL6	BL5	BL4	BL3	BL2	BL1	BL0	
	1	0	NSL7	NSL6	NSL5	NSL4	NSL3	NSL2	NSL1	NSL0	
	1	0	0	0	0	0	0	0	SCM1	SCM0	
17.Set Start Line	0	0	1	0	1	0	1	0	1	1	Set scroll start address 00h≦SL≦A1h
	1	0	SL7	SL6	SL5	SL4	SL3	SL2	SL1	SL0	
18.OSC ON	0	0	1	1	0	1	0	0	0	1	Turn on the internal oscillator
19.OSC OFF	0	0	1	1	0	1	0	0	1	0	Turn off the internal oscillator
20.Power Control	0	0	0	0	1	0	0	0	0	0	Power circuit operation VB=0: OFF, VB=1: ON VF=0: OFF, VF=1: ON VR=0: OFF, VR=1: ON
	1	0	0	0	0	0	VB	0	VF	VR	
21.Set Vop	0	0	1	0	0	0	0	0	0	1	Set Vop
	1	0	0	0	Vop5	Vop4	Vop3	Vop2	Vop1	Vop0	
	1	0	0	0	0	0	0	Vop8	Vop7	Vop6	
22.Vop Control	0	0	1	1	0	1	0	1	1	VOL	Control Vop VOL=0: Vop increase one step VOL=1: Vop decrease one step
23.Read Register Mode	0	0	0	1	1	1	1	1	0	REG	Set read register mode REG=0: read the register value of Vop[5:0] REG=1: read the register value of Vop[8:6]
24.Nop	0	0	0	0	1	0	0	1	0	1	No operation
25. Read Status (Parallel and I^2C)	0	1	D7	D6	D5	D4	D3	D2	D1	D0	Read status byte (Parallel and I^2C)
26.Read Status (4-Line and 3-Line SPI)	0	0	1	1	1	1	1	1	1	0	Read status byte (4-Line and 3-Line SPI)
	0	1	D7	D6	D5	D4	D3	D2	D1	D0	
27.Data Format Select	0	0	0	0	0	0	1	DO	0	0	DO=0; LSB on bottom (Default) DO=1; LSB on top
28.Display Mode	0	0	1	1	1	1	0	0	0	0	Set display mode DM=0 :Mono (Default) DM=1 :4Gray Scale Mode
	1	0	0	0	0	1	0	0	0	DM	

Sitronix Confidential The information contained herein is the exclusive property of Sitronix and shall not be distributed, reproduced, or disclosed in whole or in part without prior written permission of Sitronix.

INSTRUCTION	A0	R/W	COMMAND BYTE								DESCRIPTION
			D7	D6	D5	D4	D3	D2	D1	D0	
29.Set ICON	0	0	0	1	1	1	0	1	1	ICON	Enable/Disable ICON RAM ICON=1 ; Enable ICON RAM ICON=0 ; Disable ICON RAM
30.Set Master/Slave	0	0	0	1	1	0	1	1	1	MS	Select Master or Slave mode MS=0 ; CMD for Master (Default) MS=1 ; CMD for Slave
Ext[1:0]=0,1 (Extension Command 2)											
31.Set Gray Level	0	0	0	0	1	0	0	0	0	0	Set gray scale level GL[4:0]: Set Light Gray Level GD[4:0]: Set Dark Gray Level
	1	0	0	0	0	0	0	0	0	0	
	1	0	0	0	0	0	0	0	0	0	
	1	0	0	0	0	0	0	0	0	0	
	1	0	0	0	0	GL4	GL3	GL2	GL1	GL0	
	1	0	0	0	0	GL4	GL3	GL2	GL1	GL0	
	1	0	0	0	0	GL4	GL3	GL2	GL1	GL0	
	1	0	0	0	0	0	0	0	0	0	
	1	0	0	0	0	0	0	0	0	0	
	1	0	0	0	0	GD4	GD3	GD2	GD1	GD0	
	1	0	0	0	0	0	0	0	0	0	
	1	0	0	0	0	0	0	0	0	0	
	1	0	0	0	0	GD4	GD3	GD2	GD1	GD0	
	1	0	0	0	0	GD4	GD3	GD2	GD1	GD0	
	1	0	0	0	0	GD4	GD3	GD2	GD1	GD0	
	1	0	0	0	0	0	0	0	0	0	
	1	0	0	0	0	0	0	0	0	0	
32.Analog Circuit Set	0	0	0	0	1	1	0	0	1	0	Set analog circuit BE[1:0]: Booster efficiency set BS[2:0]: Set bias ratio
	1	0	0	0	0	0	0	0	0	0	
	1	0	0	0	0	0	0	0	BE1	BE0	
	1	0	0	0	0	0	0	BS2	BS1	BS0	
33.Booster Level	0	0	0	1	0	1	0	0	0	1	Set booster level BST=0 : X8 BST=1 : X10
	1	0	1	1	1	1	1	0	1	BST	
34. Driving Select	0	0	0	1	0	0	0	0	0	DS	Power type DS=0: Internal (Default) DS=1 :External
35.Auto Read Control	0	0	1	1	0	1	0	1	1	1	Set auto-read instruction XARD=0: Enable auto read XARD=1: Disable auto read
	1	0	1	0	0	XARD	1	1	1	1	
36.OTP WR/RD Control	0	0	1	1	1	0	0	0	0	0	OTP WR/RD control WR/RD=0: Enable OTP read WR/RD=1: Enable OTP write
	1	0	0	0	WR/ RD	0	0	0	0	0	
37.OTP Control Out	0	0	1	1	1	0	0	0	0	1	OTP control out
38.OTP Write	0	0	1	1	1	0	0	0	1	0	OTP write

Sitronix Confidential The information contained herein is the exclusive property of Sitronix and shall not be distributed, reproduced, or disclosed in whole or in part without prior written permission of Sitronix.

INSTRUCTION	A0	R/W	COMMAND BYTE								DESCRIPTION
			D7	D6	D5	D4	D3	D2	D1	D0	
39.OTP Read	0	0	1	1	1	0	0	0	1	1	OTP read
40.OTP Selection Control	0	0	1	1	1	0	0	1	0	0	OTP selection control Ctrl=1: Disable OTP Selection Ctrl=0: Enable OTP Selection
	1	0	1	Ctrl	0	1	1	0	0	1	
41.OTP Programming Setting	0	0	1	1	1	0	0	1	0	1	OTP programming setting
	1	0	0	0	0	0	1	1	1	1	
42.Frame Rate	0	0	1	1	1	1	0	0	0	0	Frame rate setting in different temperature range
	1	0	0	0	0	FRA4	FRA3	FRA2	FRA1	FRA0	
	1	0	0	0	0	FRB4	FRB3	FRB2	FRB1	FRB0	
	1	0	0	0	0	FRC4	FRC3	FRC2	FRC1	FRC0	
	1	0	0	0	0	FRD4	FRD3	FRD2	FRD1	FRD0	
43.Temperature Range	0	0	1	1	1	1	0	0	1	0	Temperature range setting
	1	0	0	TA6	TA5	TA4	TA3	TA2	TA1	TA0	
	1	0	0	TB6	TB5	TB4	TB3	TB2	TB1	TB0	
	1	0	0	TC6	TC5	TC4	TC3	TC2	TC1	TC0	
44.Temperature Gradient Compensation	0	0	1	1	1	1	0	1	0	0	Set temperature gradient compensation coefficient
	1	0	MT13	MT12	MT11	MT10	MT03	MT02	MT01	MT00	
	1	0	MT33	MT32	MT31	MT30	MT23	MT22	MT21	MT20	
	1	0	MT53	MT52	MT51	MT50	MT43	MT42	MT41	MT40	
	1	0	MT73	MT72	MT71	MT70	MT63	MT62	MT61	MT60	
	1	0	MT93	MT92	MT91	MT90	MT83	MT82	MT81	MT80	
	1	0	MTB3	MTB2	MTB1	MTB0	MTA3	MTA2	MTA1	MTA0	
	1	0	MTD3	MTD2	MTD1	MTD0	MTC3	MTC2	MTC1	MTC0	
	1	0	MTF3	MTF2	MTF1	MTF0	MTE3	MTE2	MTE1	MTE0	
Ext[1:0]=1,1(Extension Command 4)											
45.Enable OTP	0	0	1	1	0	1	0	1	1	0	Enable OTP EOTP =0 ; Disable (Default) EOTP =1 ; Enable
	1	0	0	0	0	EOTP	0	0	0	0	

Sitronix Confidential The information contained herein is the exclusive property of Sitronix and shall not be distributed, reproduced, or disclosed in whole or in part without prior written permission of Sitronix.

9.2 INSTRUCTION DESCRIPTION

9.2.1 Extension Command

This instruction sets the extension instruction mode.

A0	R/W	D7	D6	D5	D4	D3	D2	D1	D0
0	0	0	0	1	1	EXT1	0	0	EXT0

Flag	Description
EXT[1:0]	Extension command mode. EXT [1:0]=[0,0]: Extension command 1. EXT [1:0]=[0,1]: Extension command 2. EXT [1:0]=[1,0]: Extension command 3. EXT [1:0]=[1,1]: Extension command 4.

"Extension Command 1"

9.2.2 Display ON/OFF

This instruction turns the display ON or OFF. When ST75256 enters display off, the display output is blank regardless of the content of DDRAM. When ST75256 enters display on (exit display off), the display output is according to content of DDRAM.

A0	R/W	D7	D6	D5	D4	D3	D2	D1	D0	Description
0	0	1	0	1	0	1	1	1	DSP	DSP=0: Display off mode DSP=1: Display on mode

9.2.3 Inverse Display

This instruction would inverse the scanned data without recover the content of DDRAM. As the result, the ON and OFF status of all pixels are interchanged.

A0	R/W	D7	D6	D5	D4	D3	D2	D1	D0	Description
0	0	1	0	1	0	0	1	1	INV	INV=0: Normal display INV=1: Inverse display

9.2.4 All Pixel ON/OFF

When ST75256 enters all pixels on or off mode, all display pixels are turned on or off regardless of the content of DDRAM. The content of DDRAM is not changed by setting All Pixel ON/OFF. After execute the instruction of Partial Mode, the display mode will exit all pixel on/off mode then enter normal mode.

A0	R/W	D7	D6	D5	D4	D3	D2	D1	D0	Description
0	0	0	0	1	0	0	0	1	AP	AP=0: All pixel off mode AP=1: All pixel on mode

Note: This function is only used in mono mode, does not support grayscale mode.

Sitronix Confidential The information contained herein is the exclusive property of Sitronix and shall not be distributed, reproduced, or disclosed in whole or in part without prior written permission of Sitronix.

9.2.5 Display Control

A0	R/W	D7	D6	D5	D4	D3	D2	D1	D0	Description
0	0	1	1	0	0	1	0	1	0	CLD: CL Dividing ratio
1	0	0	0	0	0	0	CLD	0	0	DT: Duty of the module
1	0	DT7	DT6	DT5	DT4	DT3	DT2	DT1	DT0	LF: Line cycles in a frame
1	0	0	0	LF4	FI	LF3	LF2	LF1	LF0	FI: Inversion type of frame

CLD: CL dividing ratio. They are used to change number of dividing stages of external or internal clock.
CLD=0: not divide, CLD=1: 2 divisions.

DT [7:0] is used to set duty of the module.

DT7	DT6	DT5	DT4	DT3	DT2	DT1	DT0	Duty
0	0	0	1	1	1	1	1	32
0	0	1	1	1	1	1	1	64
0	1	0	0	1	1	1	1	80
0	1	1	1	1	1	1	1	128
1	0	0	1	1	1	1	1	160
1	0	1	0	0	0	0	1	162

LF[4:0] specifies number of line cycles (range from 2 to 32) in a frame.
Number of line cycles-1 = LF4 x 2^4 + LF3 x 2^3 + LF2 x 2^2 + LF1 x 2^1 + LF0 x 2^0
For example, 11 line cycles in a frame → 11-1=10 → (LF4, LF3, LF2, LF1, LF0) = (0, 1, 0, 1, 0)
In the default, frame inversion (LF4, LF3, LF2, LF1, LF0) = (0, 0, 0, 0, 0) is selected.
FI decides the inversion type of frame at the end of common scan cycle while the number of duty is not divisible by the number of line cycles per frame. For example, in the application of 1/m duty and n line cycles in a frame set, the difference of the choice in FI is shown as the following figure.
m = n x k + r, where m, n, k, and r are all whole numbers, and r is the remainder of m divided by n (r < n).

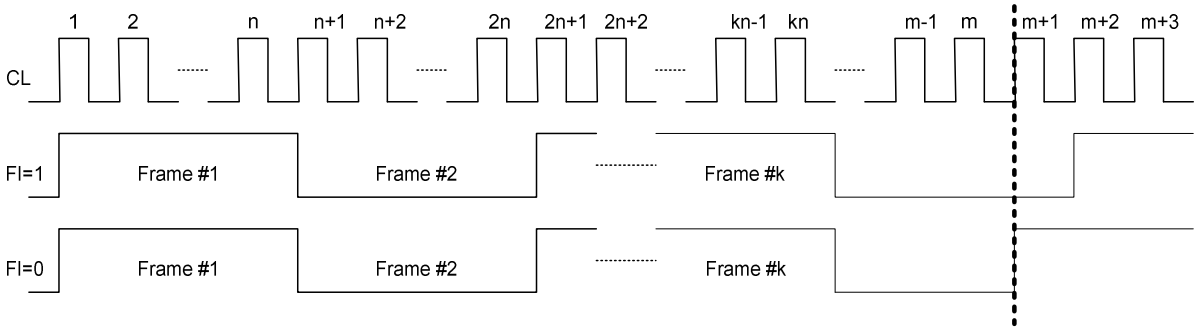

Sitronix Confidential The information contained herein is the exclusive property of Sitronix and shall not be distributed, reproduced, or disclosed in whole or in part without prior written permission of Sitronix.

9.2.6 Power Save

When ST75256 enters the sleep in mode, the mode causes the LCD module entering the minimum power consumption mode. All of operations (e.g. the DC/DC converter, internal oscillator and panel scanning) are stopped. When ST75256 enters sleep out mode (exit sleep in mode), the DC/DC converter and internal oscillator are started.

A0	R/W	D7	D6	D5	D4	D3	D2	D1	D0	Description
0	0	1	0	0	1	0	1	0	SLP	SLP=0: Sleep out mode SLP=1: Sleep in mode

9.2.7 Set Page Address

This instruction is used to define area of DDRAM where MCU can access. The page address is automatically increased by one (+1) after column address counter is over XE[7:0]. The page address will return to starting page address YS[7:0] immediately when the page address increases one over the ending page address YE[7:0]. The YS[7:0] setting must be equal to or less than YE[7:0]. When YS[7:0] or YE[7:0] is great than 28h, out of DDRAM range will be ignored.

A0	R/W	D7	D6	D5	D4	D3	D2	D1	D0	Description
0	0	0	1	1	1	0	1	0	1	YS: Starting page address YE: Ending page address
1	0	YS7	YS6	YS5	YS4	YS3	YS2	YS1	YS0	
1	0	YE7	YE6	YE5	YE4	YE3	YE2	YE1	YE0	

Note: The range of address is 00h~28h.

9.2.8 Set Column Address

This instruction is used to define area of DDRAM where MCU can access. The column address is automatically increased by one (+1) after each DDRAM access. After the ending column address XE[7:0], column address returns to starting column address XS[7:0]. The XS[7:0] setting that must be equal to or less than XE[7:0]. When XS[7:0] or XE[7:0] is great than FFh, out of DDRAM range will be ignored.

A0	R/W	D7	D6	D5	D4	D3	D2	D1	D0	Description
0	0	0	0	0	1	0	1	0	1	XS: Starting column address XE: Ending column address
1	0	XS7	XS6	XS5	XS4	XS3	XS2	XS1	XS0	
1	0	XE7	XE6	XE5	XE4	XE3	XE2	XE1	XE0	

Note: The range of address is 00h~FFh.

Sitronix Confidential The information contained herein is the exclusive property of Sitronix and shall not be distributed, reproduced, or disclosed in whole or in part without prior written permission of Sitronix.

9.2.9 Data Scan Direction

This instruction defines the write/read scanning direction of DDRAM.

A0	R/W	D7	D6	D5	D4	D3	D2	D1	D0	Description
0	0	1	0	1	1	1	1	0	0	Specify COM scan direction
1	0	0	0	0	0	0	MV	MX	MY	

MV: Address-scan direction. MV =0: In the column direction, MV =1: In the page direction

MX: Normal/reverse direction of the column address. MX =0: Normal, MX =1: Reverse

MY: Normal/inverse direction of the page address. MY =0: Normal, MY =1: Inverse

"MV=0"

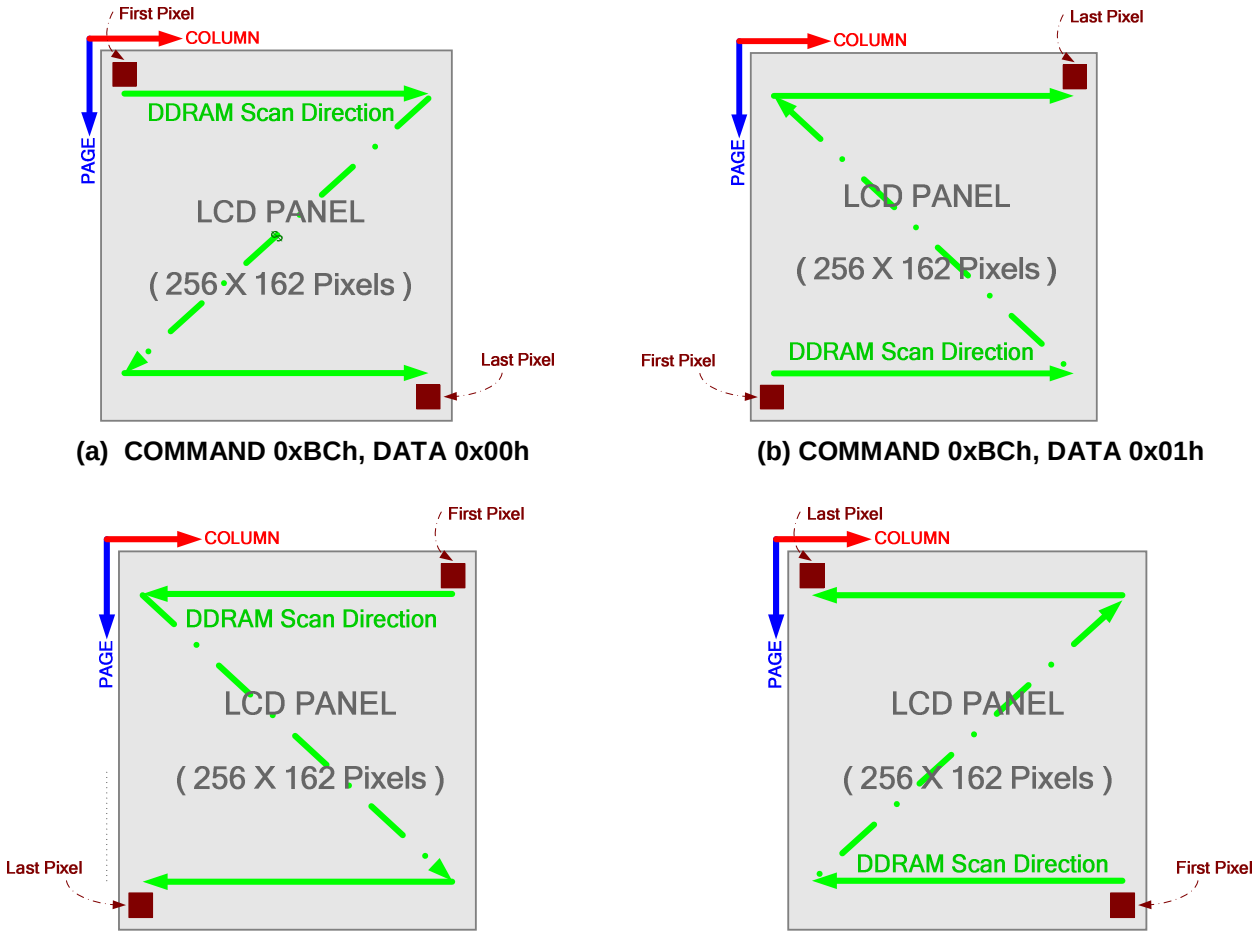

(a) COMMAND 0xBCh, DATA 0x00h **(b) COMMAND 0xBCh, DATA 0x01h**

(c) COMMAND 0xBCh, DATA 0x02h **(d) COMMAND 0xBCh, DATA 0x03h**

Figure 43 Different RAM accessing setup under COMMAND 0xBCh

(a) DATA 0x00h (MV =0, MX=0, MY=0)

(b) DATA 0x01h (MV =0, MX=0, MY=1)

(c) DATA 0x02h (MV =0, MX=1, MY=0)

(d) DATA 0x03h (MV =0, MX=1, MY=1)

Sitronix Confidential The information contained herein is the exclusive property of Sitronix and shall not be distributed, reproduced, or disclosed in whole or in part without prior written permission of Sitronix.

“MV=1”

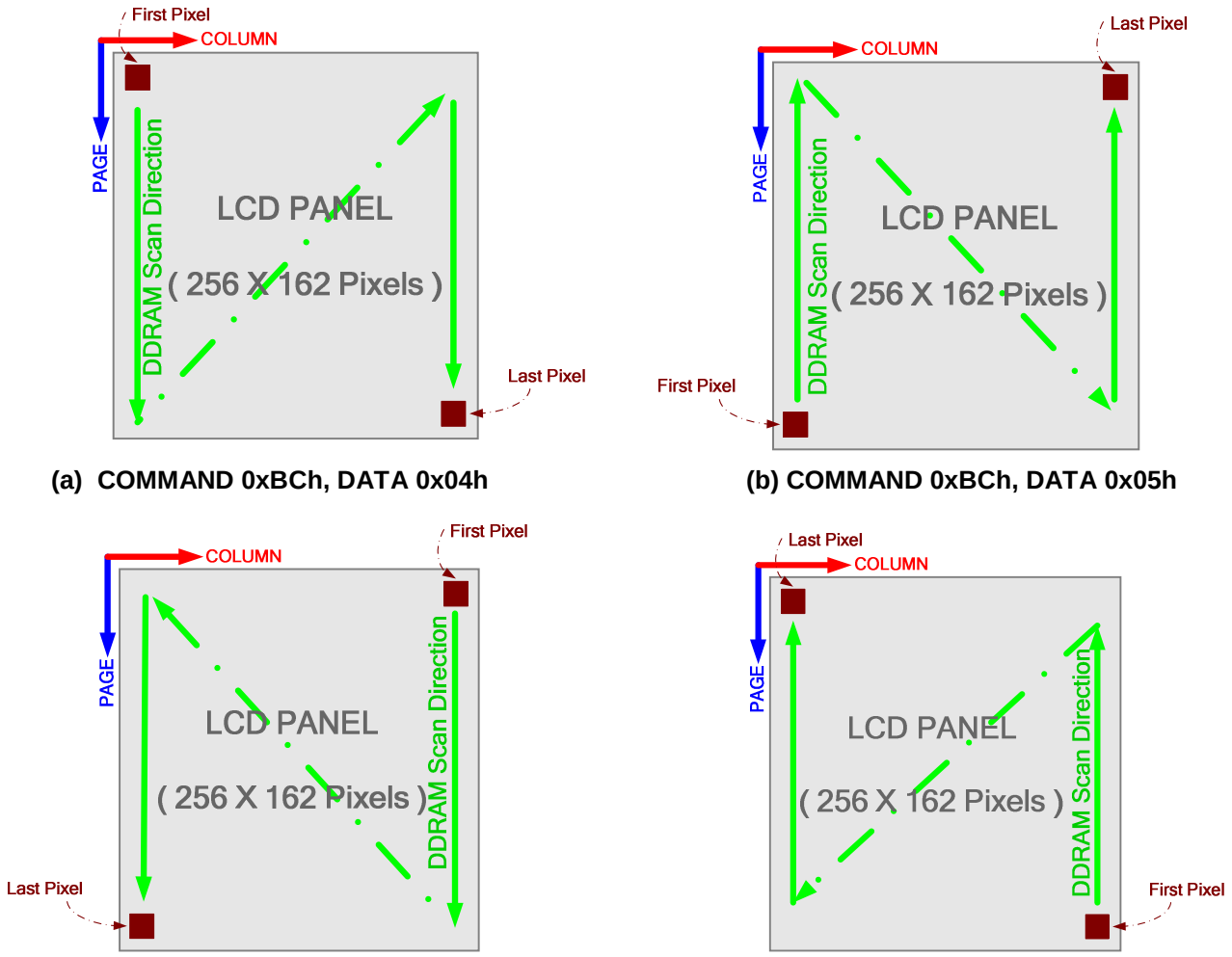

(a) COMMAND 0xBCh, DATA 0x04h

(b) COMMAND 0xBCh, DATA 0x05h

(c) COMMAND 0xBCh, DATA 0x06h

(d) COMMAND 0xBCh, DATA 0x07h

Figure 44 Different RAM accessing setup under COMMAND 0xBCh

(a) DATA 0x04h (MV =1, MX=0, MY=0)

(b) DATA 0x05h (MV =1, MX=0, MY=1)

(c) DATA 0x06h (MV =1, MX=1, MY=0)

(d) DATA 0x07h (MV =1, MX=1, MY=1)

Sitronix Confidential The information contained herein is the exclusive property of Sitronix and shall not be distributed, reproduced, or disclosed in whole or in part without prior written permission of Sitronix.

9.2.10 Write Data

This instruction is used to transfer data from MCU to DDRAM without changing status of ST75256. The column address and page address will be reset to starting column address (XS) and starting page address (YS) when this instruction is accepted. The pre-instruction is defined to enter write DDRAM mode. The following continuously data means content of DDRAM without pre-instruction. Write Display Data would be stopped when any other instruction is accepted.

A0	R/W	D7	D6	D5	D4	D3	D2	D1	D0	Description
0	0	0	1	0	1	1	1	0	0	Write display data to DDRAM
1	0	D7	D6	D5	D4	D3	D2	D1	D0	

9.2.11 Read Data

The instruction is used to transfer data from DDRAM to MCU without changing status of ST75256. The column address and page address will be reset to staring column address (XS) and starting page address (YS) when this instruction is accepted. The pre-instruction is defined to enter read DDRAM mode. The following continuously data means content of DDRAM without pre-instruction. Read Display Data would be stopped when any other instruction is accepted.

A0	R/W	D7	D6	D5	D4	D3	D2	D1	D0	Description
0	0	0	1	0	1	1	1	0	1	Read data from DDRAM (Only for parallel interface and I^2C)
1	1	D7	D6	D5	D4	D3	D2	D1	D0	

9.2.12 Partial In

This instruction is to specify the partial display area. It will turn on partial display of the screen (dividing screen by lines) to save power.

A0	R/W	D7	D6	D5	D4	D3	D2	D1	D0	Description
0	0	1	0	1	0	1	0	0	0	PTS: Start line address PTE: End line address
1	0	PTS7	PTS6	PTS5	PTS4	PTS3	PTS2	PTS1	PTS0	
1	0	PTE7	PTE6	PTE5	PTE4	PTE3	PTE2	PTE1	PTE0	

Only the address of the display line can be specified for the partial display. Do not specify an address not to be displayed when scrolled

Sitronix Confidential The information contained herein is the exclusive property of Sitronix and shall not be distributed, reproduced, or disclosed in whole or in part without prior written permission of Sitronix.

9.2.13 Partial Out

This instruction is used to exit the PARTIAL DISPLAY MODE.

A0	R/W	D7	D6	D5	D4	D3	D2	D1	D0	Description
0	0	1	0	1	0	1	0	0	1	Exit the partial display mode

9.2.14 Read /Modify/Write In

This command is used paired with the “Read/Modify/Write Out” command. Once this command has been input, the display data read command does not change the column address, but only the display data write command increments (+1) the column address. This mode is maintained until the END command is input. When the END command is input, the column address returns to the address it was at when the read/modify/write command was entered. This function makes it possible to reduce the load on the MPU when there are repeating data changes in a specified display region, such as when there is a blanking cursor.

A0	R/W	D7	D6	D5	D4	D3	D2	D1	D0	Description
0	0	1	1	1	0	0	0	0	0	Enable read/modify/write

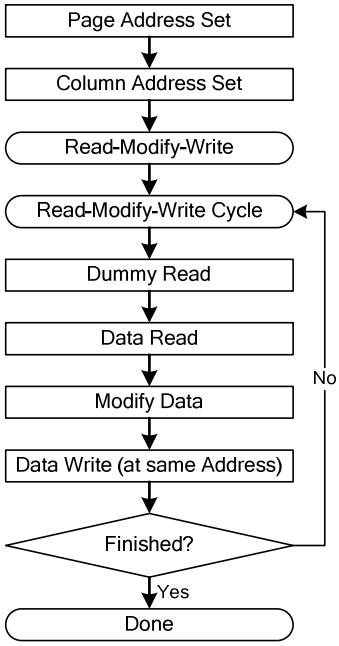

Figure 45 Command Sequence for Read/Modify/Write

Sitronix Confidential The information contained herein is the exclusive property of Sitronix and shall not be distributed, reproduced, or disclosed in whole or in part without prior written permission of Sitronix.

9.2.15 Read /Modify/Write Out

When the Read/Modify/Write Out command is input, the Read-modify-Write mode is released and the column address returns to the address it was when the Read-modify-Write instruction was entered.

A0	R/W	D7	D6	D5	D4	D3	D2	D1	D0	Description
0	0	1	1	1	0	1	1	1	0	Disable read/modify/write

9.2.16 Scroll Area

This command specifies the scrolling type of area, fixed area and scrolled area.

A0	R/W	D7	D6	D5	D4	D3	D2	D1	D0	Description
0	0	1	0	1	0	1	0	1	0	TL: Top line address
1	0	TL7	TL6	TL5	TL4	TL3	TL2	TL1	TL0	BL: Bottom line address
1	0	BL7	BL6	BL5	BL4	BL3	BL2	BL1	BL0	NSL: Number of specified
1	0	NSL7	NSL6	NSL5	NSL4	NSL3	NSL2	NSL1	NSL0	lines
1	0	0	0	0	0	0	0	SCM1	SCM0	SCM: Area scroll mode

SCM[1:0]: It is used to specify the scrolling mode.

SCM1	SCM0	Scrolling Mode	Settings		
			Top line address (TL)	Bottom line address (BL)	Number of specified lines (NSL)
0	0	Center mode	Top(fixed area) height = Top address	Bottom(fixed area) height = 161-Bottom address	Bottom start address = Specified number
0	1	Top mode	0	Bottom(fixed area) height = 161-Bottom address	Bottom start address = Specified number
1	0	Bottom mode	Top(fixed area) height = Top address	161	161
1	1	Whole mode	0	161	161

Sitronix Confidential The information contained herein is the exclusive property of Sitronix and shall not be distributed, reproduced, or disclosed in whole or in part without prior written permission of Sitronix.

DDRAM address of the top fixed area is set in the line address increasing direction starting with the 0th line. DDRAM address of the bottom fixed area is set in the line address decreasing direction starting with 161st line. The DDRAM addresses of other line fixed areas are assigned to the scrolled + background areas.

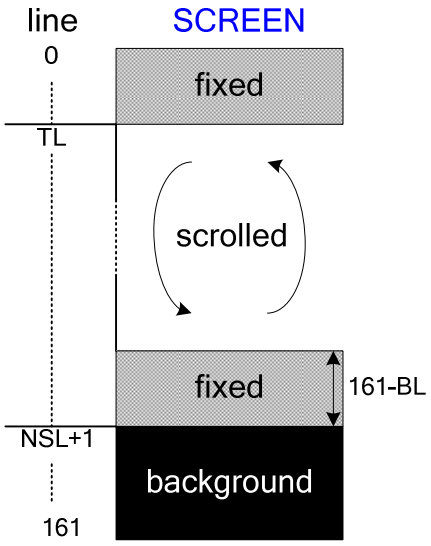

TL[7:0] is to specify the top line address of the scrolled + background areas. Specify the 0th line for the top screen scroll or whole screen scroll.

BL[7:0] specifies the bottom line address of the scroll + background areas. Specify the 161th line for the bottom or whole screen scroll. The relation that top line address < bottom line address must be maintained.

NSL[7:0] specifies a specific number of lines {Numbers of (Top fixed area +Scroll area) line-1}. In the case of the bottom scroll or whole screen scroll, the value is identical with BL[7:0].

The user can turn on the area scroll function by executing the area scroll set command first and then specifying the display start block of the scroll area with the scroll start address set command.

9.2.17 Scroll Start Address Set

This command is to specify which line address of DDRAM to be the start line content shown on screen. Note that you must execute this command after executing the area scroll set command. Scroll becomes available by dynamically changing the start line address.

A0	R/W	D7	D6	D5	D4	D3	D2	D1	D0	Description
0	0	1	0	1	0	1	0	1	1	SL: Start line address
1	0	SL7	SL6	SL5	SL4	SL3	SL2	SL1	SL0	

Note : Don't repeat "Scroll Area (AAH)" instruction when "Scroll Start Address" is executed.

Sitronix Confidential The information contained herein is the exclusive property of Sitronix and shall not be distributed, reproduced, or disclosed in whole or in part without prior written permission of Sitronix.

9.2.18 OSC ON

This command is used to turns on the internal oscillation circuit. It is valid only when the internal oscillation circuit CLS = HIGH

A0	R/W	D7	D6	D5	D4	D3	D2	D1	D0	Description
0	0	1	1	0	1	0	0	0	1	Turn on the internal OSC

9.2.19 OSC OFF

It turns off the internal oscillation circuit.

A0	R/W	D7	D6	D5	D4	D3	D2	D1	D0	Description
0	0	1	1	0	1	0	0	1	0	Turn off the internal OSC

9.2.20 Power Control

This command is used to turn on or off the Booster circuit, voltage regulator circuit, and reference voltage.

A0	R/W	D7	D6	D5	D4	D3	D2	D1	D0	Description
0	0	0	0	1	0	0	0	0	0	Power circuit control
1	0	0	0	0	0	VB	0	VF	VR	

Flag	Description
VB	VB=0: Internal booster is turned OFF VB=1: Internal booster is turned ON
VR	VR=0: Internal regulator is turned OFF VR=1: Internal regulator is turned ON
VF	VF=0: Internal follower is turned OFF VF=1: Internal follower is turned ON

Sitronix Confidential The information contained herein is the exclusive property of Sitronix and shall not be distributed, reproduced, or disclosed in whole or in part without prior written permission of Sitronix.

9.2.21 Set Vop

This instruction is used to adjust the optimum LCD supply voltage Vop.

The calculation of Vop is as shown blow: V0=3.6+(Vop[8:0]+VopIncStep-VopDecStep)x0.04

VopIncStep = Total Vop Increase Steps

VopDecStep = Total Vop Decrease Steps

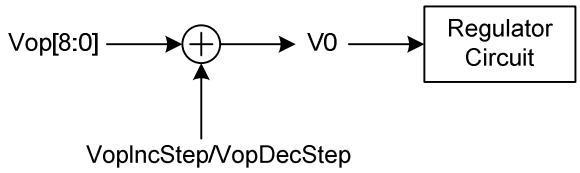

A0	R/W	D7	D6	D5	D4	D3	D2	D1	D0	Description
0	0	1	0	0	0	0	0	0	1	Set Vop
1	0	0	0	Vop5	Vop4	Vop3	Vop2	Vop1	Vop0	
1	0	0	0	0	0	0	Vop8	Vop7	Vop6	

The suggestion of usable V0 voltage is shown below (assume VopIncStep/ VopDecStep=0):

Vop8	Vop7	Vop6	Vop5	Vop4	Vop3	Vop2	Vop1	Vop0	V0 (V)
0	0	1	0	1	0	1	0	1	7.00
0	0	1	0	1	0	1	1	0	7.04
0	0	1	0	1	0	1	1	1	7.08
:	:	:	:	:	:	:	:	:	:
1	0	1	1	0	0	1	1	0	17.92
1	0	1	1	0	0	1	1	1	17.96
1	0	1	1	0	1	0	0	0	18.00

9.2.22 Vop Control

This command is used to increase/decrease Vop step by one. Each step is 0.04V.

VOL=0; Vop increase one step

VOL=1; Vop decrease one step

A0	R/W	D7	D6	D5	D4	D3	D2	D1	D0	Description
0	0	1	1	0	1	0	1	1	VOL	Adjust Vop step by one

Sitronix Confidential The information contained herein is the exclusive property of Sitronix and shall not be distributed, reproduced, or disclosed in whole or in part without prior written permission of Sitronix.

9.2.23 Read Register Mode

Execute the Read Register Mode and Read Status commands in succession to read the value of specified register.

REG=0 ; read the Vop[5:0] value of Vop set

REG=1 ; read the Vop[8:6] value of Vop set

A0	R/W	D7	D6	D5	D4	D3	D2	D1	D0	Description
0	0	0	1	1	1	1	1	0	REG	Set read register mode

Execute the “Read Status” command (parallel or serial) immediately after this command and execute the “NOP” command after the “Read Status” command.

9.2.24 NOP

This command does not affect the operation but has the function of canceling the IC test mode. Thus, it is recommended to enter it periodically to prevent malfunctioning due to noise and so on.

A0	R/W	D7	D6	D5	D4	D3	D2	D1	D0	Description
0	0	0	0	1	0	0	1	0	1	No operation

9.2.25 Read Status (Parallel and I^2C)

The command is to read the internal condition of the IC. One status can be displayed depending on the setting status after reset or after NOP operation

A0	R/W	D7	D6	D5	D4	D3	D2	D1	D0	Description
0	1	D7	D6	D5	D4	D3	D2	D1	D0	Read status byte

Data Bus	Flag	Description
D7	Scroll Area Mode	Refer to SCM1
D6	Scroll Area Mode	Refer to SCM0
D5	RWM ON/OFF	0 : Out ; 1: In
D4	Data Scan Direction	0 : Column ; 1: Page
D3	Display ON/OFF	0 : OFF; 1: ON
D2	OTP Access	0 : OutAccess; 1: InAccess
D1	Inverse Display	0 : Inverse; 1: Normal
D0	Partial Display	0 : OFF; 1: ON

Sitronix Confidential The information contained herein is the exclusive property of Sitronix and shall not be distributed, reproduced, or disclosed in whole or in part without prior written permission of Sitronix.

9.2.26 Read Status (4-Line and 3-Line SPI)

The command is to read the internal condition of the IC. One status can be displayed depending on the setting status after reset or after NOP operation

A0	R/W	D7	D6	D5	D4	D3	D2	D1	D0	Description
0	1	1	1	1	1	1	1	1	0	Read status byte
0	1	D7	D6	D5	D4	D3	D2	D1	D0	

Data Bus	Flag	Description
D7	Scroll Area Mode	Refer to SCM1
D6	Scroll Area Mode	Refer to SCM0
D5	RWM ON/OFF	0 : Out ; 1: In
D4	Data Scan Direction	0 : Column ; 1: Page
D3	Display ON/OFF	0 : OFF; 1: ON
D2	OTP Access	0 : OutAccess; 1: InAccess
D1	Inverse Display	0 : Inverse; 1: Normal
D0	Partial Display	0 : OFF; 1: ON

9.2.27 Data Format Select

Top/bottom mode sets data order.

A0	R/W	D7	D6	D5	D4	D3	D2	D1	D0	Description
0	0	0	0	0	0	1	DO	0	0	Select LSB position

Flag	Description
DO	DO=0: LSB is on bottom ; D7→D0 (Default) DO=1: LSB is on top; D0→D7

9.2.28 Display Mode

This instruction defines the display mode is gray scale mode or monochrome mode.

A0	R/W	D7	D6	D5	D4	D3	D2	D1	D0	Description
0	0	1	1	1	1	0	0	0	0	Set display mode DM=0 :Mono(Default) DM=1 :4Gray Scale Mode
1	0	0	0	0	1	0	0	0	DM	

Sitronix Confidential The information contained herein is the exclusive property of Sitronix and shall not be distributed, reproduced, or disclosed in whole or in part without prior written permission of Sitronix.

9.2.29 Set ICON

This instruction is used to enable/disable ICON RAM.

ICON=0 ; Disable ICON RAM

ICON=1 ; Enable ICON RAM

A0	R/W	D7	D6	D5	D4	D3	D2	D1	D0	Description
0	0	0	1	1	1	0	1	1	ICON	Enable/Disable ICON RAM

Ensure to write B/W data to ICON DDRAM in 4 gray scale mode.

9.2.30 Set Master/Slave

This instruction defines the command is to control Master or Slave.

MS=0; CMD for Master (Default)

MS=1; CMD for Slave

A0	R/W	D7	D6	D5	D4	D3	D2	D1	D0	Description
0	0	0	1	1	0	1	1	1	MS	Select Master or Slave mode MS=0 ; CMD for Master MS=1 ; CMD for Slave

Sitronix Confidential The information contained herein is the exclusive property of Sitronix and shall not be distributed, reproduced, or disclosed in whole or in part without prior written permission of Sitronix.

"Extension Command 2"

9.2.31 Set Gray Level

This instruction is used to set gray scale level.

GL[4:0] : Set light gray level.

GD[4:0]: Set dark gray level.

A0	R/W	D7	D6	D5	D4	D3	D2	D1	D0	Description
0	0	0	0	1	0	0	0	0	0	Set Gray Scale Level GL[4:0]: Set Light Gray Level GD[4:0]: Set Dark Gray Level
1	0	0	0	0	0	0	0	0	0	
1	0	0	0	0	0	0	0	0	0	
1	0	0	0	0	0	0	0	0	0	
1	0	0	0	0	GL4	GL3	GL2	GL1	GL0	
1	0	0	0	0	GL4	GL3	GL2	GL1	GL0	
1	0	0	0	0	GL4	GL3	GL2	GL1	GL0	
1	0	0	0	0	0	0	0	0	0	
1	0	0	0	0	0	0	0	0	0	
1	0	0	0	0	GD4	GD3	GD2	GD1	GD0	
1	0	0	0	0	0	0	0	0	0	
1	0	0	0	0	0	0	0	0	0	
1	0	0	0	0	GD4	GD3	GD2	GD1	GD0	
1	0	0	0	0	GD4	GD3	GD2	GD1	GD0	
1	0	0	0	0	GD4	GD3	GD2	GD1	GD0	
1	0	0	0	0	0	0	0	0	0	
1	0	0	0	0	0	0	0	0	0	

Note:

1. The range of gray level is 0x00h~0x1Fh. 0x00h is the lightest gray scale level. 0x1Fh is the darkest gray scale level.
2. Parameter 4~6 should be set to the same value for light gray level.
3. Parameter 9,12~14 should be set to the same value for dark gray level

Sitronix Confidential The information contained herein is the exclusive property of Sitronix and shall not be distributed, reproduced, or disclosed in whole or in part without prior written permission of Sitronix.

9.2.32 Analog Circuit Set

This instruction is used to set booster efficiency and bias ratio.

A0	R/W	D7	D6	D5	D4	D3	D2	D1	D0	Description
0	0	0	0	1	1	0	0	1	0	Analog setting
1	0	0	0	0	0	0	0	0	0	
1	0	0	0	0	0	0	0	BE1	BE0	
1	0	0	0	0	0	0	BS2	BS1	BS0	

Booster Efficiency set

BE1	BE0	Frequency on booster capacitors (Hz)
0	0	Level 0
0	1	Level 1 (Default)
1	0	Level 2
1	1	Level 3

Select LCD bias ratio of the voltage required for driving the LCD

BS2	BS1	BS0	LCD bias
0	0	0	1/14
0	0	1	1/13
0	1	0	1/12 (Default)
0	1	1	1/11
1	0	0	1/10
1	0	1	1/9

9.2.33 Booster Level

This instruction is used to control the built-in booster circuit to provide the power source of the built-in regulator.

A0	R/W	D7	D6	D5	D4	D3	D2	D1	D0	Description
0	0	0	1	0	1	0	0	0	1	Analog setting
1	0	1	1	1	1	1	0	1	BST	

BST	Booster Level
0	X8
1	X10 (Default)

Sitronix Confidential The information contained herein is the exclusive property of Sitronix and shall not be distributed, reproduced, or disclosed in whole or in part without prior written permission of Sitronix.

9.2.34 Driving Select

This instruction is used to decide power source mode.

DS=0 ; Internal (default)

DS=1 ; External

A0	R/W	D7	D6	D5	D4	D3	D2	D1	D0	Description
0	0	0	1	0	0	0	0	0	DS	Power source select

9.2.35 Auto Read Control

This instruction is used to set status of OTP auto read to enable or disable.

A0	R/W	D7	D6	D5	D4	D3	D2	D1	D0	Description
0	0	1	1	0	1	0	1	1	1	XARD=0: Enable auto read
1	0	1	0	0	XARD	1	1	1	1	XARD=1: Disable auto read

9.2.36 OTP WR/RD Control

This instruction is used to set status of OTP that write to OTP or read from OTP.

A0	R/W	D7	D6	D5	D4	D3	D2	D1	D0	Description
0	0	1	1	1	0	0	0	0	0	WR/RD=0: Enable OTP read
1	0	0	0	WR /RD	0	0	0	0	0	WR/RD=1: Enable OTP write

9.2.37 OTP Control Out

This instruction is used to cancel the OTP control.

A0	R/W	D7	D6	D5	D4	D3	D2	D1	D0	Description
0	0	1	1	1	0	0	0	0	1	OTP control out

9.2.38 OTP Write

This instruction is used to trigger OTP programming procedure.

A0	R/W	D7	D6	D5	D4	D3	D2	D1	D0	Description
0	0	1	1	1	0	0	0	1	0	OTP programming procedure

Sitronix Confidential The information contained herein is the exclusive property of Sitronix and shall not be distributed, reproduced, or disclosed in whole or in part without prior written permission of Sitronix.

9.2.39 OTP Read

This instruction is used to trigger OTP programming procedure.

A0	R/W	D7	D6	D5	D4	D3	D2	D1	D0	Description
0	0	1	1	1	0	0	0	1	1	OTP programming procedure

9.2.40 OTP Selection Control

This instruction is used to define OTP selection control.

A0	R/W	D7	D6	D5	D4	D3	D2	D1	D0	Description
0	0	1	1	1	0	0	1	0	0	Ctrl=1: Disable OTP Selection
1	0	1	Ctrl	0	1	1	0	0	1	Ctrl=0: Enable OTP Selection

9.2.41 OTP Programming Setting

This instruction is used to set OTP write timing.

A0	R/W	D7	D6	D5	D4	D3	D2	D1	D0	Description
0	0	1	1	1	0	0	1	0	1	OTP programming setting
1	0	0	0	0	0	1	1	1	1	

Sitronix Confidential The information contained herein is the exclusive property of Sitronix and shall not be distributed, reproduced, or disclosed in whole or in part without prior written permission of Sitronix.

9.2.42 Frame Rate

The instruction is used to define frequency of frame rate in different temperature range as shown in **Figure 42**

A0	R/W	D7	D6	D5	D4	D3	D2	D1	D0	Description
0	0	1	1	1	1	0	0	0	0	FRA: FR in temp. -40℃ to TA FRB: FR in temp TA to TB FRC: FR in temp. TB to TC FRD: FR in temp TC to 90℃
1	0	0	0	0	FRA4	FRA3	FRA2	FRA1	FRA0	
1	0	0	0	0	FRB4	FRB3	FRB2	FRB1	FRB0	
1	0	0	0	0	FRC4	FRC3	FRC2	FRC1	FRC0	
1	0	0	0	0	FRD4	FRD3	FRD2	FRD1	FRD0	

FRx4	FRx3	FRx2	FRx1	FRx0	Frame Rate (Hz)
0	0	0	0	0	5.0
0	0	0	0	1	10.0
0	0	0	1	0	20.0
0	0	0	1	1	34.5
0	0	1	0	0	41.5
0	0	1	0	1	46.0
0	0	1	1	0	46.0
0	0	1	1	1	49.0
0	1	0	0	0	51.0
0	1	0	0	1	53.0
0	1	0	1	0	55.0
0	1	0	1	1	55.0
0	1	1	0	0	69.0
0	1	1	0	1	73.0

FRx4	FRx3	FRx2	FRx1	FRx0	Frame Rate (Hz)
0	1	1	1	0	76.5
0	1	1	1	1	76.5
1	0	1	0	0	83.0
1	0	1	0	1	92.0
1	0	1	1	0	92.0
1	0	1	1	1	98.0
1	1	0	0	0	102.0
1	1	0	0	1	106.0
1	1	0	1	0	110.0
1	1	0	1	1	110.0
1	1	1	0	0	138.0
1	1	1	0	1	146.0
1	1	1	1	0	153.0
1	1	1	1	1	153.0

The frame rate table is used for 32/64/80/128/160/162 duty. If the number of duty is changed, the frame rate will be different also.

Sitronix Confidential The information contained herein is the exclusive property of Sitronix and shall not be distributed, reproduced, or disclosed in whole or in part without prior written permission of Sitronix.

9.2.43 Temperature Range

This instruction is used to define the temperature range for automatic frame rate adjustment according to current temperature as shown in **Figure 41**.

A0	R/W	D7	D6	D5	D4	D3	D2	D1	D0	Description
0	0	1	1	1	1	0	0	1	0	TA[6:0]=TA Temp.(℃)+40 TB[6:0]=TB Temp.(℃)+40 TC[6:0]=TC Temp.(℃)+40
1	0	0	TA6	TA5	TA4	TA3	TA2	TA1	TA0	
1	0	0	TB6	TB5	TB4	TB3	TB2	TB1	TB0	
1	0	0	TC6	TC5	TC4	TC3	TC2	TC1	TC0	

Temp. Range Value	Temp. Rising State (℃)	Temp. Falling State (℃)
Freq. changing point A	(TA[6:0]-40)+5	TA[6:0]-40
Freq. changing point B	(TB[6:0]-40)+5	TB[6:0]-40
Freq. changing point C	(TC[6:0]-40)+5	TC[6:0]-40

9.2.44 Temperature Gradient Compensation

This instruction is used to define the temperature gradient compensation coefficient. The temperature gradient compensation coefficient setting is shown as below table.

A0	R/W	D7	D6	D5	D4	D3	D2	D1	D0	Description
0	0	1	1	1	1	0	1	0	0	Set temperature gradient compensation coefficient
1	0	MT13	MT12	MT11	MT10	MT03	MT02	MT01	MT00	
1	0	MT33	MT32	MT31	MT30	MT23	MT22	MT21	MT20	
1	0	MT53	MT52	MT51	MT50	MT43	MT42	MT41	MT40	
1	0	MT73	MT72	MT71	MT70	MT63	MT62	MT61	MT60	
1	0	MT93	MT92	MT91	MT90	MT83	MT82	MT81	MT80	
1	0	MTB3	MTB2	MTB1	MTB0	MTA3	MTA2	MTA1	MTA0	
1	0	MTD3	MTD2	MTD1	MTD0	MTC3	MTC2	MTC1	MTC0	
1	0	MTF3	MTF2	MTF1	MTF0	MTE3	MTE2	MTE1	MTE0	

Sitronix Confidential The information contained herein is the exclusive property of Sitronix and shall not be distributed, reproduced, or disclosed in whole or in part without prior written permission of Sitronix.

MTx3	MTx2	MTx1	MTx0	Mx (mV/℃)
0	0	0	0	0
0	0	0	1	-5
0	0	1	0	-10
:	:	:	:	:
1	1	0	1	-65
1	1	1	0	-70
1	1	1	1	-75

"Extension Command 4"

9.2.45 Enable OTP

This instruction is used to disable/enable OTP programming.

A0	R/W	D7	D6	D5	D4	D3	D2	D1	D0	Description
0	0	1	1	0	1	0	1	1	0	Enable OTP EOTP=0 ; Disable (Default) EOTP =1 ; Enable
1	0	0	0	0	EOTP	0	0	0	0	

Sitronix Confidential The information contained herein is the exclusive property of Sitronix and shall not be distributed, reproduced, or disclosed in whole or in part without prior written permission of Sitronix.

10 OPERATION FLOW

10.1 Power ON

Referential Operation Flow	Operation Sequence
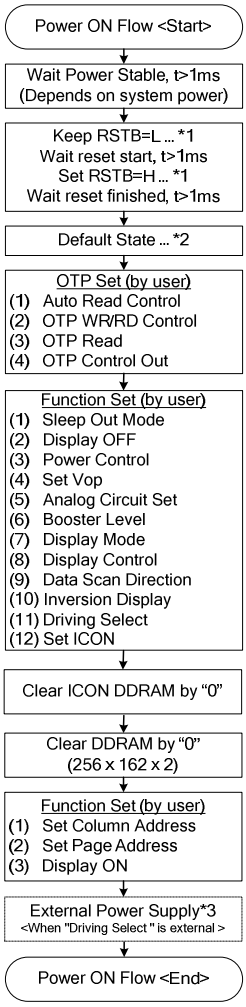 Note 1. Please refer to the specification of tRW and tR. 2. Refer to the section of Reset circuit. 3. The detail instruction functionality is described in section of INSTRUCTION DESCRIPTION. 4. The power stable is defined as the time that the later power (VDDI or VDDA) reaches 90% of its rated voltage. 5. VDDA include VDD2, VDD3, VDD4	**Case-1: RSTB=L while Power ON** 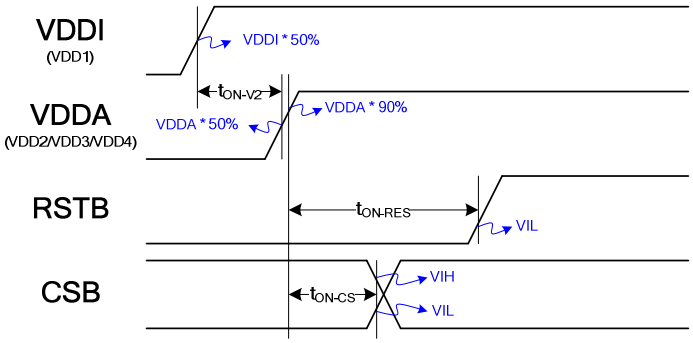 **Case-2: RSTB=H while Power ON** 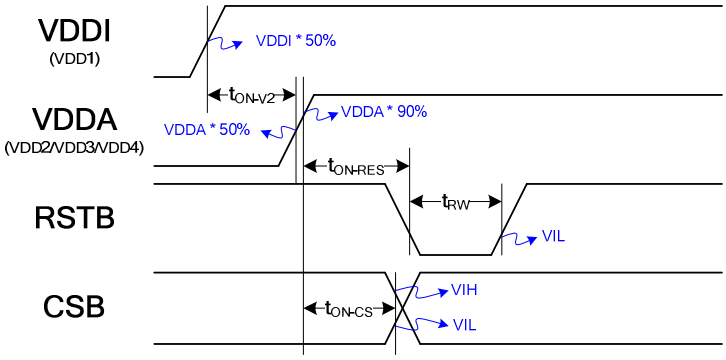

Sitronix Confidential The information contained herein is the exclusive property of Sitronix and shall not be distributed, reproduced, or disclosed in whole or in part without prior written permission of Sitronix.

Item	Symbol	Requirement	Description
VDDA power ON delay	t_{ON-V2}	No Limitation	● VDDI and VDDA can be applied in any order. IC will NOT be damaged when one of VDDI and VDDA is ON but another is OFF. ● Power stable is defined as the time that the later power (VDDI or VDDA) reaches 90% of its rated voltage. ● Recommend Setting: 0ms ≤ t_{ON-V2} ≤ No Limitation.
RSTB input time	t_{ON-RES}	Case-1 $t_{RW} \leq t_{ON-RES}$ Case-2 No Limitation	● RSTB =L can be input at any time after power is stable. ● t_{RW} & t_R should match the timing specification of RSTB. ● RSTB has priority over CSB. ● Recommend Setting: 0 ≤ t_{ON-RES} ≤ 50 ms.
CSB input time	t_{ON-CS}	No Limitation	● CSB can be input at any time after power is stable.

Note : If RSTB is held high or unstable during power ON, a successful hardware reset by RSTB is required after VDDI and VDDA are both stable (as illustrated in Case-2). Otherwise, correct functionality can NOT be guaranteed.

Sitronix Confidential The information contained herein is the exclusive property of Sitronix and shall not be distributed, reproduced, or disclosed in whole or in part without prior written permission of Sitronix.

10.2 Power OFF

Referential Operation Flow	Operation Sequence
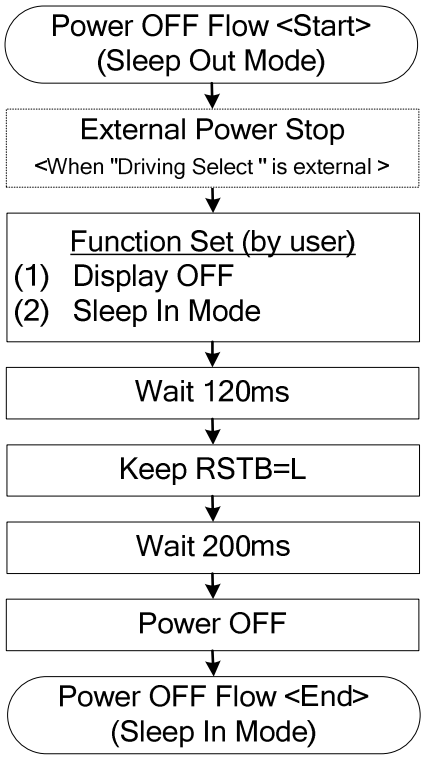	**Case-1: Use RSTB** 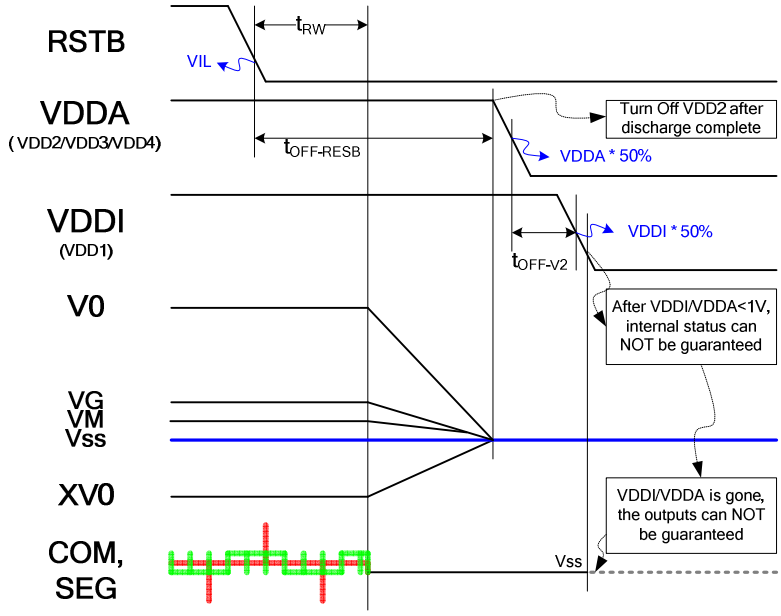 **Case-2: Power OFF at Sleep State** 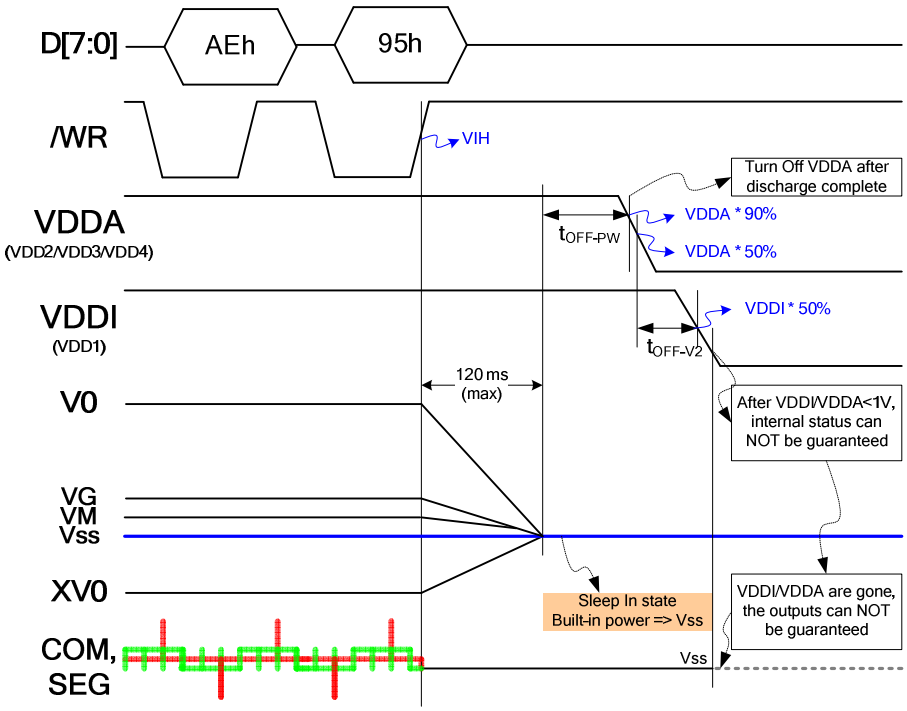

Sitronix Confidential The information contained herein is the exclusive property of Sitronix and shall not be distributed, reproduced, or disclosed in whole or in part without prior written permission of Sitronix.

Item		Symbol	Requirement	Description
Power OFF Time	Case-1	$t_{OFF-RESB}$	200ms ≤$t_{OFF-RESB}$	● Power can be turned OFF after built-in power becomes VSS.
	Case-2	t_{OFF-PW}	0 ≤ t_{OFF-PW}	
VDDA power ON delay		t_{OFF-V2}	No Limitation	● VDDI and VDDA can be powered down in any order. IC will NOT be damaged when one of VDDI and VDDA is ON but another is OFF. ● Recommend Setting: 0ms ≤ t_{OFF-V2} ≤ No Limitation.

Note: In Case-2, RSTB can fall to VSS at the same time as VDDI.

Sitronix Confidential The information contained herein is the exclusive property of Sitronix and shall not be distributed, reproduced, or disclosed in whole or in part without prior written permission of Sitronix.

10.3 OTP Operation

10.3.1 Referential OTP Burning Flow

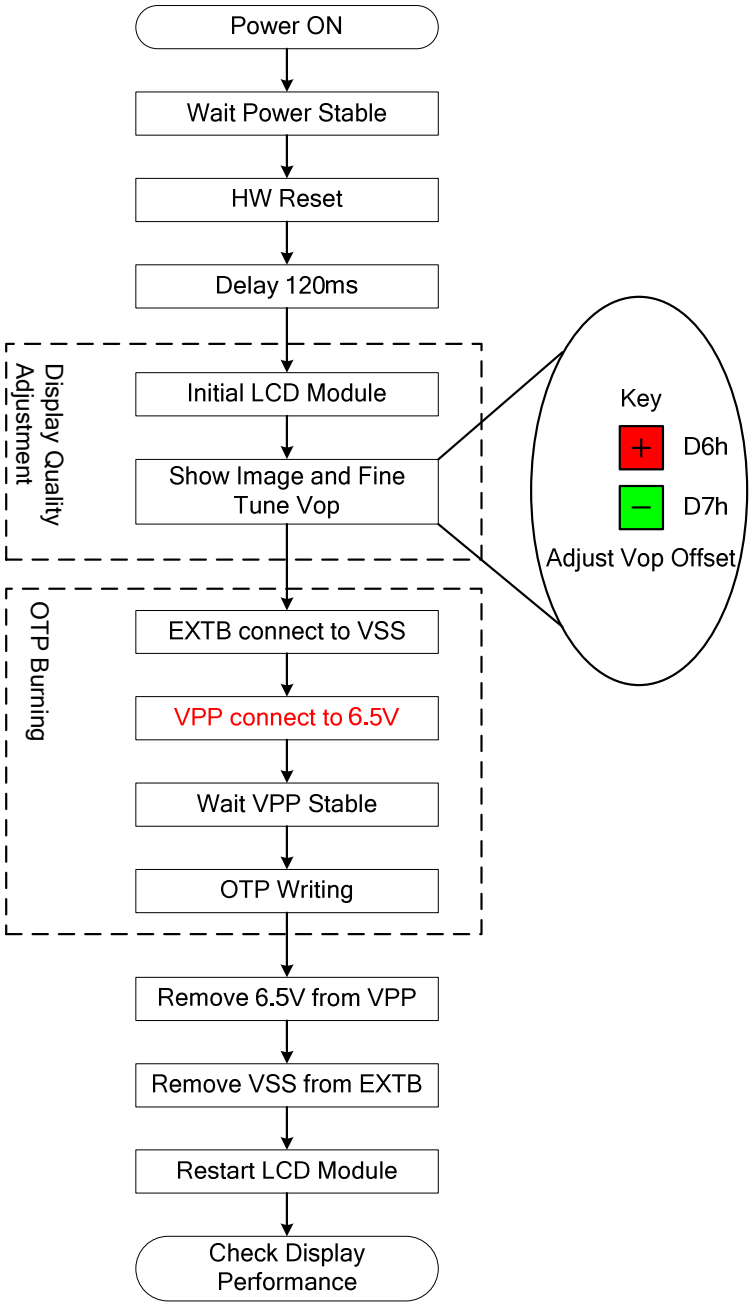

Note:

- In this section "+" and "-" key button, please execute command D6h to increase one step at Vop and execute command D7h to decrease one step at Vop.

Sitronix Confidential The information contained herein is the exclusive property of Sitronix and shall not be distributed, reproduced, or disclosed in whole or in part without prior written permission of Sitronix.

10.3.2 Referential OTP Operation Code

```
void Initialization_ST75256(void)
{
        Reset_ms(10);
        Write(Command, 0x30);          // Extension Command 1
        Write(Command, 0x6E);          //Enable Master
        Write(Command, 0x31);          // Extension Command 2
        Write(Command, 0xD7);          // Disable Auto Read
        Write(Data, 0x9F);
        Write(Command, 0xE0);          // Enable OTP Read
        Write(Data, 0x00);
        Delay_ms(10);
        Write(Command, 0xE3);          // OTP Up-Load
        Delay_ms(20);
        Write(Command, 0xE1);          // OTP Control Out
        Write(Command, 0x30);          // Extension Command 1
        Write(Command, 0x94);          // Sleep Out
        Write(Command, 0xAE);          // Display OFF
        Delay_ms(50);
        Write(Command, 0x20);          // Power Control
        Write(Data, 0x0B);             // VB, VR, VF All ON
        Write(Command, 0x81);          // Set Vop = 16V
        Write(Data, 0x36);
        Write(Data, 0x04);
        Write(Command, 0x31);          // Extension Command 2
        Write(Command, 0x20);          // Set Gray Scale Level
        Write(Data, 0x00);
        Write(Data, 0x00);
        Write(Data, 0x00);
        Write(Data, 0x17);             //Light Gray Level Setting
        Write(Data ,0x17);             //Light Gray Level Setting
        Write(Data, 0x17);             //Light Gray Level Setting
        Write(Data, 0x00);
        Write(Data, 0x00);
        Write(Data, 0x1D);             //Dark Gray Level Setting
        Write(Data, 0x00);
        Write(Data, 0x00);
```


Sitronix Confidential The information contained herein is the exclusive property of Sitronix and shall not be distributed, reproduced, or disclosed in whole or in part without prior written permission of Sitronix.

```
Write(Data, 0x1D);          //Dark Gray Level Setting
Write(Data, 0x1D);          //Dark Gray Level Setting
Write(Data, 0x1D);          //Dark Gray Level Setting
Write(Data, 0x00);
Write(Data, 0x00);
Write(Command, 0x32);       // Analog Circuit Set
Write(Data, 0x00);
Write(Data, 0x01);          // Booster Efficiency =Level 1
Write(Data, 0x02);          //Bias=1/12
Write(Command, 0x51);       // Booster Level x10
Write(Data, 0xFB);
Write(Command, 0x30);       // Extension Command 1
Write(Command, 0xF0);       // Display Mode
Write(Data, 0x11);          // 4G Mode
Write(Command, 0xCA);       // Display Control
Write(Data, 0x00);          // CL Dividing Ratio → Not Divide
Write(Data, 0xA1);          //Duty Set →162 Duty
Write(Data, 0x00);          //Frame Inversion
Write(Command, 0xBC);       // Data Scan Direction
Write(Data, 0x00);
Write(Command, 0xA6);       // Normal Display
Write(Command, 0x31);       // Extension Command 2
Write(Command, 0x40);       // Internal Power Supply

Write(Command, 0x30);       // Extension Command 1
Write(Command, 0x77);       // Enable ICON RAM
Write(Command, 0x15);       // Column Address Setting
Write(Data, 0x00);          // SEG0 -> SEG255
Write(Data, 0xFF);
Clear_ICON_DDRAM();         //Clear Whole ICON DDRAM by "0"
Write(Command, 0x76);       // Disable ICON RAM

Write(Command, 0x75);       // Page Address Setting
Write(Data, 0x00);          // COM0 -> COM161
Write(Data, 0x28);
Clear_DDRAM();              // Clear Whole DDRAM by "0"
Write(Command, 0x30);       // Extension Command 1
```


Sitronix Confidential The information contained herein is the exclusive property of Sitronix and shall not be distributed, reproduced, or disclosed in whole or in part without prior written permission of Sitronix.

```
        Write(Command, 0x15);           // Column Address Setting
        Write(Data, 0x00);              // SEG0 -> SEG255
        Write(Data, 0xFF);
        Write(Command, 0x75);           // Page Address Setting
        Write(Data, 0x00);              // COM0 -> COM161
        Write(Data, 0x28);

        Disp_Image();                   // Fill the DDRAM Data by Panel
                                        Resolution
        Write(Command, 0xAF);           // Display ON
}

void Vop_Fine_Tune(void)
{
        Disp_Image();                   // Display the image

        Write(Command, 0x30);           // Extension Command 1
        Write(Command, 0xAF);           // Display ON
        Write(Command, 0xD6);           // Fine tuning Vop to adjust display
        or                              quality
        Write(Command, 0xD7);
}
```


Sitronix Confidential The information contained herein is the exclusive property of Sitronix and shall not be distributed, reproduced, or disclosed in whole or in part without prior written permission of Sitronix.

```
void OTP_Write(void)
{
        Write(Command, 0x30);           // Extension Command 1
        Write(Command, 0xAE);           // Display OFF
        Delay_ms(50);                   // Delay 50ms

        Write(Command, 0x39);           //Enable OTP
        Write(Command, 0XD6);
        Write(Data, 0x10);

        Write(Command, 0x31);           // Extension Command 2
        Write(Command, 0xF0);           // Frame Rate = 73Hz
        Write(Data, 0x0D);
        Write(Data, 0x0D);
        Write(Data, 0x0D);
        Write(Data, 0x0D);

        Write(Command, 0xE4);           // OTP Selection Control
        Write(Data, 0x99);
        Write(Command, 0xE5);           // OTP Programming Setting
        Write(Data, 0x0F);
        Write(Command, 0xE0);           // OTP WR/RD Control
        Write(Data, 0x20);
        Delay_ms(100);                  // Delay 100ms
        Write(Command, 0xE2);           // OTP Write
        Delay_ms(100);                  // Delay 100ms
        Write(Command, 0xE1);           // OTP Control Out
        Write(Command, 0x30);           // Extension Command 1
}
```


Sitronix Confidential The information contained herein is the exclusive property of Sitronix and shall not be distributed, reproduced, or disclosed in whole or in part without prior written permission of Sitronix.

11 HANDLING

Inputs and outputs are protected against electrostatic discharge in normal handling. However, to be totally safe, it is desirable to take normal precautions appropriate to handling MOS devices.

12 ABSOLUTE MAXIMUM RATINGS

VSS=0V

Parameter	Symbol	Conditions	Unit
Digital Power Supply Voltage	VDDI (VDD1)	–0.3 ~ 4.0	V
Analog Power supply voltage	VDDA (VDD2~VDD4)	–0.3 ~ 4.0	V
LCD Power supply voltage	V0-XV0	–0.3 ~ 19	V
LCD Power supply voltage	VG	–0.3 ~ VDDA+0.3	V
LCD Power supply voltage	VM	–0.3 ~ VDDA+0.3	V
MPU Interface Input Voltage	Vin	–0.3 ~ VDDI+0.3	V
Operating temperature	TOPR	–40 to +85	℃
Storage temperature	TSTR	–55 to +125	℃

Note:

1. All voltages are respect to VSS unless otherwise noted (VSS1=VSS2=VSS3=VSS4=VSS5).
2. Insure the voltage levels of V0, VG, VM, VSS and XV0 always match the correct relation while operating: V0 ≥ VG > VM > VSS ≥ XV0
3. Stresses exceed the ranges listed above may cause permanent damage to IC. These values are stresses only. IC should be operated under DC/AC Characteristics condition for normal operation. If this condition is not met, IC operation may be error and the reliability may be deteriorated.
4. Parameters are valid in operating temperature range unless otherwise specified.
5. Interface input voltage range cannot exceed the maximum limitation of digital power supply voltage. Vin≦ 3.6V.

Sitronix Confidential The information contained herein is the exclusive property of Sitronix and shall not be distributed, reproduced, or disclosed in whole or in part without prior written permission of Sitronix.

13 DC CHARACTERISTICS

VSS1=VSS2=VSS3=VSS4=VSS5=0V and Ta = –40 ~ 85 ℃, u nless otherwise specified.

Item	Symbol	Condition		Related Pin	Rating			Unit
					Min.	Typ.	Max.	
Digital Operating Voltage	VDDI			VDD1	1.7	–	3.6	V
Analog Operating Voltage	VDDA			VDD2~5	2.6	–	3.6	V
Input High-level Voltage	V_{IH}			MPU Interface	0.7*VDD1	–	VDD1	V
Input Low-level Voltage	V_{IL}			MPU Interface	VSS1	–	0.3*VDD1	V
Output High-level Voltage	V_{OH}			D[7:0]	0.8*VDD1	–	VDD1	V
Output Low-level Voltage	V_{OL}			D[7:0]	VSS1	–	0.2*VDD1	V
Input Leakage Current	I_{IL}	Vin = VDD1 or VSS1		MPU Interface	–1.0	–	1.0	μA
ON Resistance of LCD Drivers	R_{ON}	Ta=25℃ Bias=1/14	Vop=16V ΔV=10%	COM Drivers	–	1	–	KΩ
			VG=3V, ΔV=10%	SEG Drivers	–	1	–	KΩ
Frame Frequency	f_{FR}	VDDI=VDDA=3.3V, N-Line OFF, FR= 0x0D Duty=1/162, Ta = 25℃		–	66	73	80	Hz
Vop Voltage Output	Vop			V0-XV0[*1,2]	7		18	V
VG Voltage Output	VG			VG[*1,2]	1.8	–	VDD2	V
VM Voltage Output	VM			VM[*2]	0.9	VG/2	VDD2	V

Note:

1. V0, XV0 and VG include: V0I, V0O, V0S, XV0I, XV0O, XV0S, VGI, VGO & VGS.
2. V0, XV0, VG and VM do NOT support external power supply.

Sitronix Confidential The information contained herein is the exclusive property of Sitronix and shall not be distributed, reproduced, or disclosed in whole or in part without prior written permission of Sitronix.

The current consumed by whole IC (bare die) with internal power system:

Item	Symbol	Condition	Rating			Unit
			Min.	Typ.	Max.	
Display ON Pattern: SNOW (Static)	ISS	VDDI=VDDA=3.3V, 10x Booster, Vop = 14.0V, Bias=1/14 N-Line OFF, f_{FR}=73Hz, Ta=25°C	–	800	1000	μA
Sleep In	ISS	VDDI=VDDA=3.3V, Ta=25°C	–	10	20	μA

Note: The current is DC characteristic of a “Bare Chip”

Sitronix Confidential The information contained herein is the exclusive property of Sitronix and shall not be distributed, reproduced, or disclosed in whole or in part without prior written permission of Sitronix.

14 AC CHARATERISTIC

14.1 System Bus Timing for 8080 MCU Interface

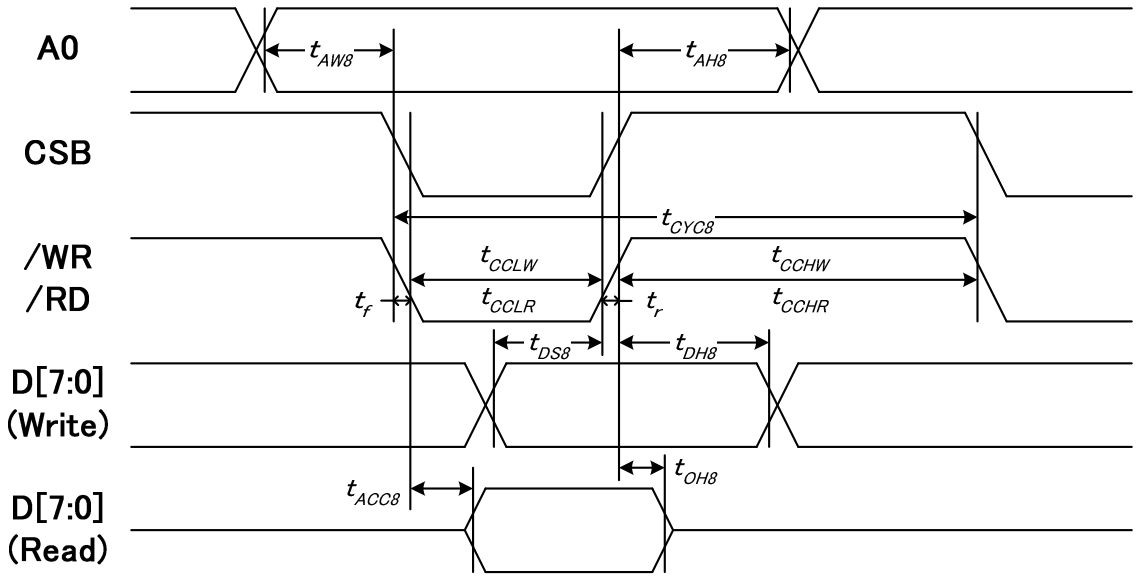

VDD1 = 1.8~3.3V, Ta = 25°C

Item	Signal	Symbol	Condition	Min.	Max.	Unit
Address setup time	A0	tAW8		20	—	ns
Address hold time		tAH8		0	—	
System cycle time (WRITE)	/WR	tCYC8		160	—	
/WR L pulse width (WRITE)		tCCLW		70	—	
/WR H pulse width (WRITE)		tCCHW		70	—	
System cycle time (READ)	RD	tCYC8		400	—	
/RD L pulse width (READ)		tCCLR		180		
/RD H pulse width (READ)		tCCHR		180		
WRITE Data setup time	D[7:0]	tDS8		15	—	
WRITE Data hold time		tDH8		15	—	
READ access time		tACC8	CL = 30 pF	—	100	
READ Output disable time		tOH8	CL = 30 pF	10	110	

Note:

1. The input signal rise time and fall time (tr, tf) is specified at 15 ns or less. When the system cycle time is extremely fast, (tr + tf) ≦ (tCYC8 – tCCLW – tCCHW) for (tr + tf) ≦ (tCYC8 – tCCLR – tCCHR) are specified.
2. All timing is specified using 20% and 80% of VDD1 as the reference.

Sitronix Confidential The information contained herein is the exclusive property of Sitronix and shall not be distributed, reproduced, or disclosed in whole or in part without prior written permission of Sitronix.

14.2 System Bus Timing for 6800 MCU Interface

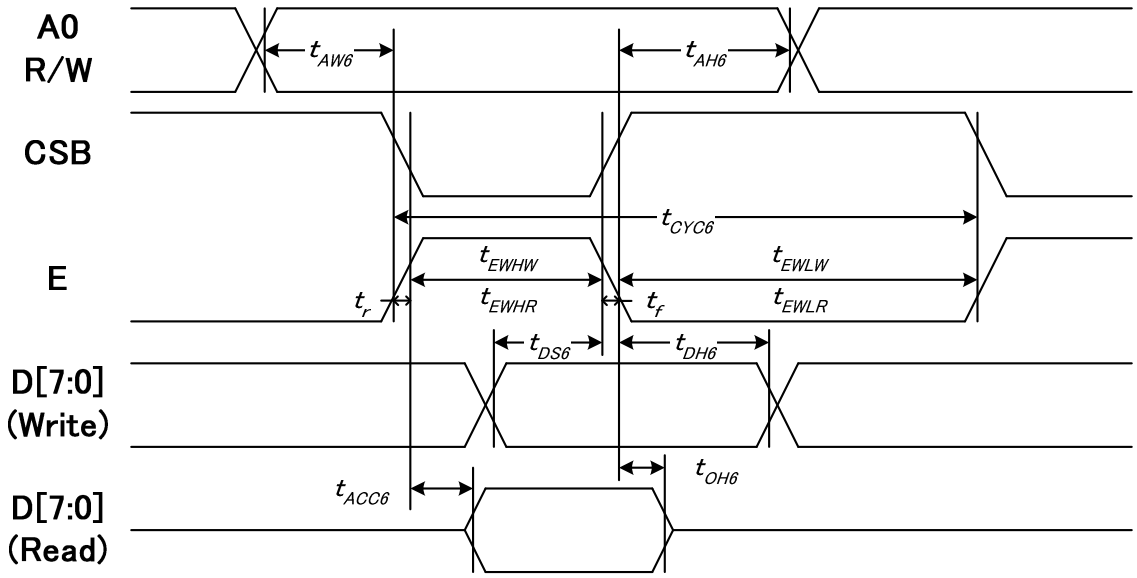

VDD1 = 1.8~3.3V, Ta = 25°C

Item	Signal	Symbol	Condition	Min.	Max.	Unit
Address setup time	A0	tAW6		20	—	ns
Address hold time		tAH6		0	—	
System cycle time (WRITE)	E	tCYC6		160	—	
Enable L pulse width (WRITE)		tEWLW		70	—	
Enable H pulse width (WRITE)		tEWHW		70	—	
System cycle time (READ)		tCYC6		400		
Enable L pulse width (READ)		tEWLR		180	—	
Enable H pulse width (READ)		tEWHR		180		
Write data setup time	D[7:0]	tDS6		15	—	
Write data hold time		tDH6		15	—	
Read data access time		tACC6	CL = 30 pF	—	100	
Read data output disable time		tOH6	CL = 30 pF	10	110	

Note:

1. The input signal rise time and fall time (tr, tf) is specified at 15 ns or less. When the system cycle time is extremely fast, (tr + tf) ≦ (tCYC6 – tEWLW – tEWHW) for (tr + tf) ≦ (tCYC6 – tEWLR – tEWHR) are specified.
2. All timing is specified using 20% and 80% of VDD1 as the reference.

Sitronix Confidential The information contained herein is the exclusive property of Sitronix and shall not be distributed, reproduced, or disclosed in whole or in part without prior written permission of Sitronix.

14.3 System Bus Timing for 4-Line SPI MCU Interface

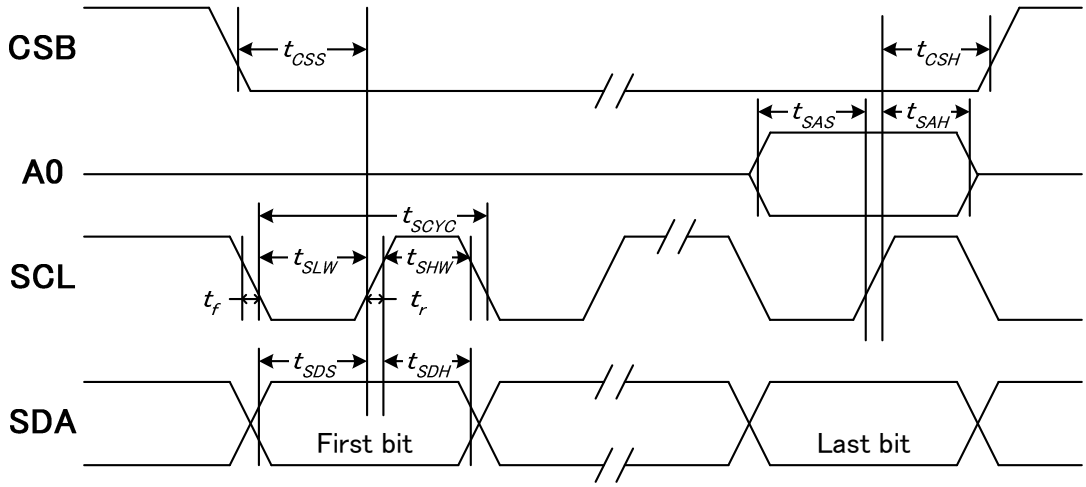

VDD1 = 1.8~3.3V, Ta = 25°C

Item	Signal	Symbol	Condition	Min.	Max.	Unit
Serial clock period	SCLK	tSCYC		80	—	ns
SCLK “H” pulse width		tSHW		30	—	
SCLK “L” pulse width		tSLW		30	—	
Address setup time	A0	tSAS		20	—	
Address hold time		tSAH		20	—	
Data setup time	SDA	tSDS		20	—	
Data hold time		tSDH		20	—	
CSB-SCLK time	CSB	tCSS		20	—	
CSB-SCLK time		tCSH		20	—	
CS “H” pulse width		tCHW		0	-	

Note:

1. The input signal rise and fall time (tr, tf) are specified at 15 ns or less.
2. All timing is specified using 20% and 80% of VDD1 as the standard.

Sitronix Confidential The information contained herein is the exclusive property of Sitronix and shall not be distributed, reproduced, or disclosed in whole or in part without prior written permission of Sitronix.

14.4 System Bus Timing for 3-Line SPI MCU Interface

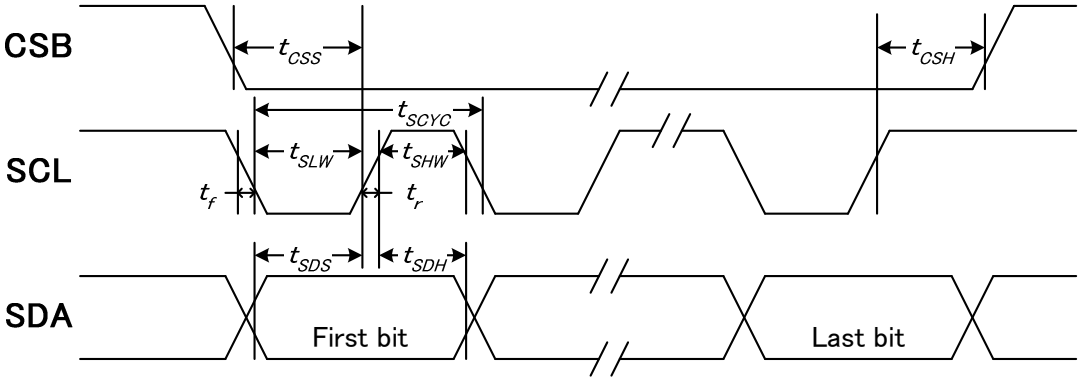

VDD1 = 1.8~3.3V, Ta = 25°C

Item	Signal	Symbol	Condition	Min.	Max.	Unit
Serial clock period	SCL	tSCYC		80	—	ns
SCL “H” pulse width		tSHW		30	—	
SCL “L” pulse width		tSLW		30	—	
Data setup time	SDA	tSDS		20	—	
Data hold time		tSDH		20	—	
CSB-SCL time	CSB	tCSS		20	—	
CSB-SCL time		tCSH		20	—	

Note:

1. The input signal rise and fall time (tr, tf) are specified at 15 ns or less.
2. All timing is specified using 20% and 80% of VDD1 as the standard.

Sitronix Confidential The information contained herein is the exclusive property of Sitronix and shall not be distributed, reproduced, or disclosed in whole or in part without prior written permission of Sitronix.

14.5 SERIAL INTERFACE (I²C Interface)

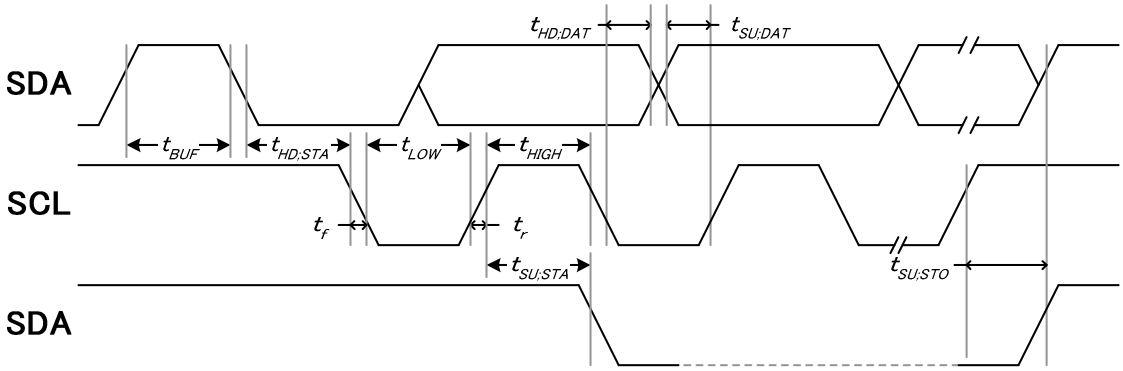

VDD1 = 1.8~3.3V, Ta =25°C

Item	Signal	Symbol	Condition	Rating		Unit
				Min.	Max.	
SCL clock frequency	SCL	fSCL		-	400	KHZ
SCL clock low period		tLOW		1.3	-	us
SCL clock high period		tHIGH		0.6	-	
Data set-up time	SDA	tSU;Data		0.1	-	
Data hold time		tHD;Data		0	0.9	
Setup time for a repeated START condition		tSU;STA		0.6	-	
Start condition hold time		tHD;STA		0.6	-	
Setup time for STOP condition		tSU;STO		0.6	-	
Bus free time between a STOP and START		tBUF		0.1	-	
Signal rise time	SCL SDA	tr		20+0.1Cb	300	ns
Signal fall time		tf		20+0.1Cb	300	
Capacitive load represented by each bus line		Cb		-	400	pF
Tolerable spike width on bus		tSW		-	50	ns

Note:

1. All timing is specified using 20% and 80% of VDD1 as the standard.

Sitronix Confidential The information contained herein is the exclusive property of Sitronix and shall not be distributed, reproduced, or disclosed in whole or in part without prior written permission of Sitronix.

14.6 Reset Timing

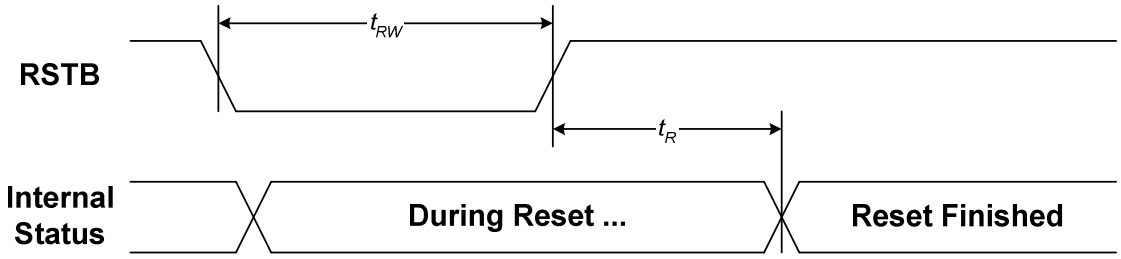

VDD1 = 1.8~3.3V, Ta = 25°C

Item	Symbol	Condition	Min.	Max.	Unit
Reset time	tR		—	1	ms
Reset “L” pulse width	tRW		1	—	ms

Sitronix Confidential The information contained herein is the exclusive property of Sitronix and shall not be distributed, reproduced, or disclosed in whole or in part without prior written permission of Sitronix.

15 APPLICATION NOTE

15.1 Application Circuit

The application circuits are examples of using built-in power supply. When using external power supply, please refer to the section 7.4.1 External Component of Power Circuit.

15.1.1 Parallel 8080 Interface

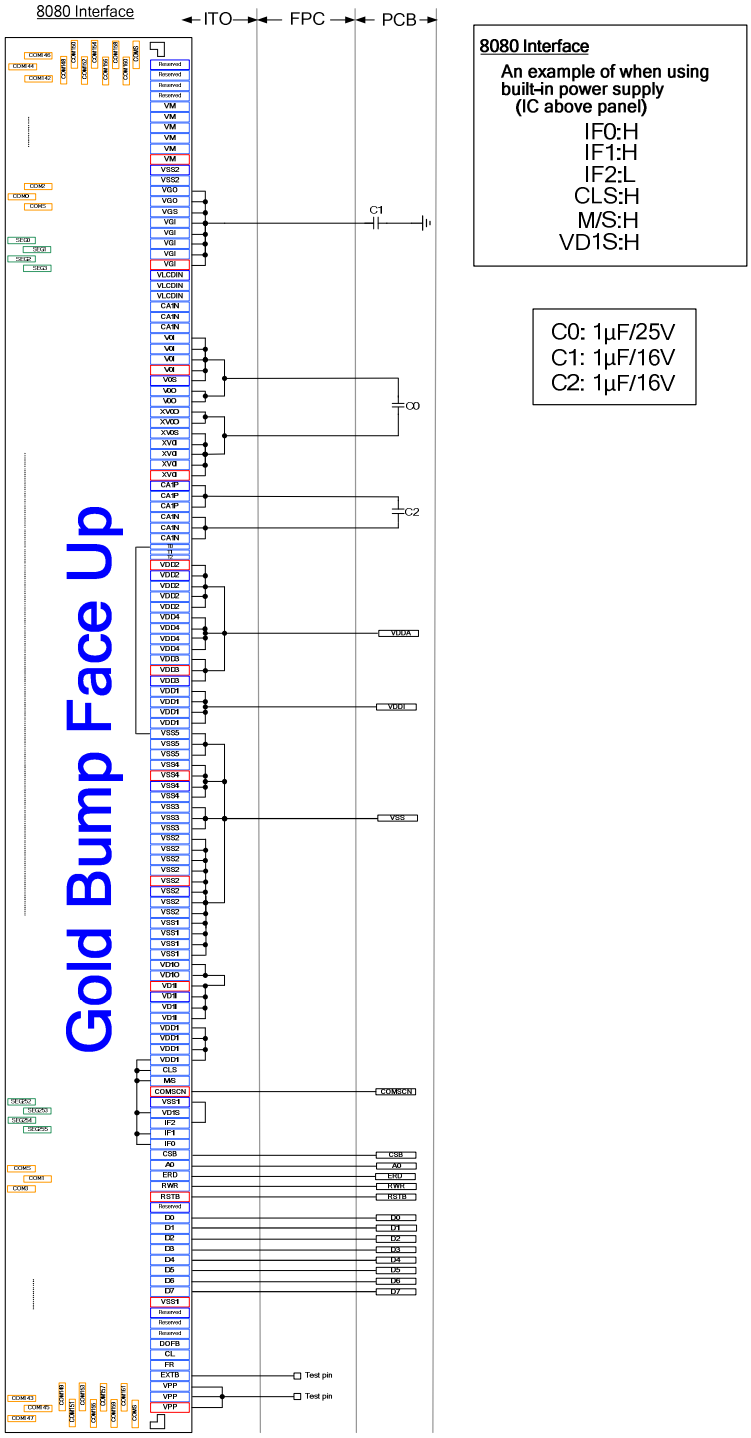

8080 Interface

An example of when using built-in power supply (IC above panel)

IF0:H
IF1:H
IF2:L
CLS:H
M/S:H
VD1S:H

C0: 1μF/25V
C1: 1μF/16V
C2: 1μF/16V

Sitronix Confidential The information contained herein is the exclusive property of Sitronix and shall not be distributed, reproduced, or disclosed in whole or in part without prior written permission of Sitronix.

15.1.2 Parallel 6800 Interface

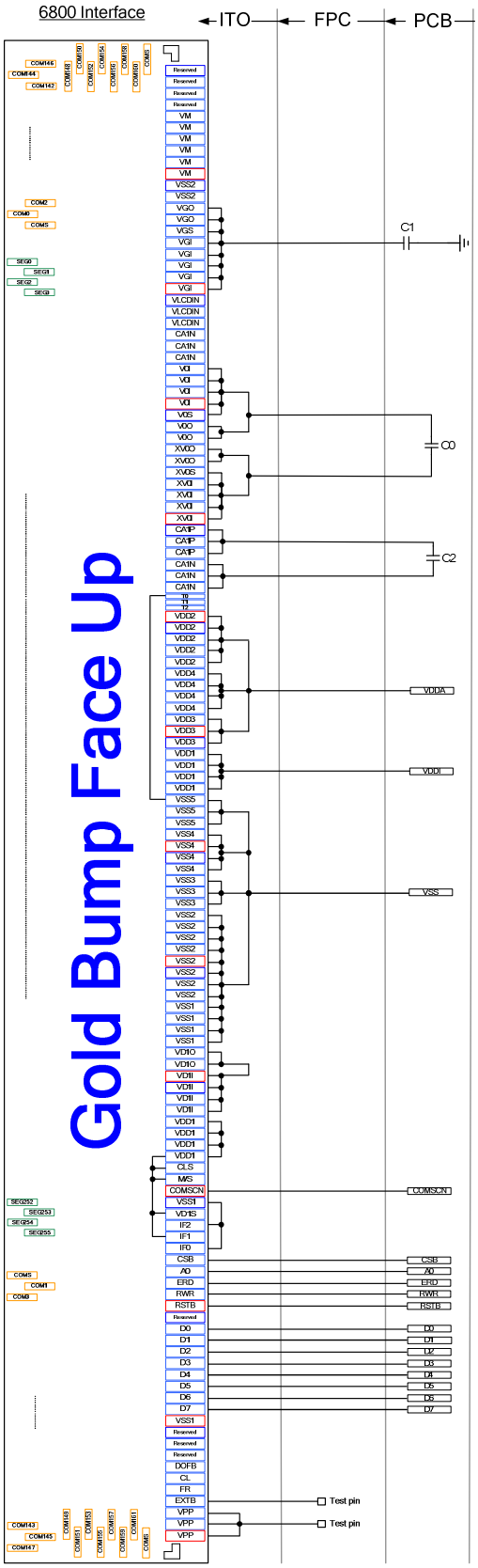

6800 Interface

An example of when using built-in power supply (IC above panel)

IF0:L
IF1:H
IF2:L
CLS:H
M/S:H
VD1S:H

C0: 1μF/25V
C1: 1μF/16V
C2: 1μF/16V

Sitronix Confidential The information contained herein is the exclusive property of Sitronix and shall not be distributed, reproduced, or disclosed in whole or in part without prior written permission of Sitronix.

15.1.3 4-Line SPI Interface

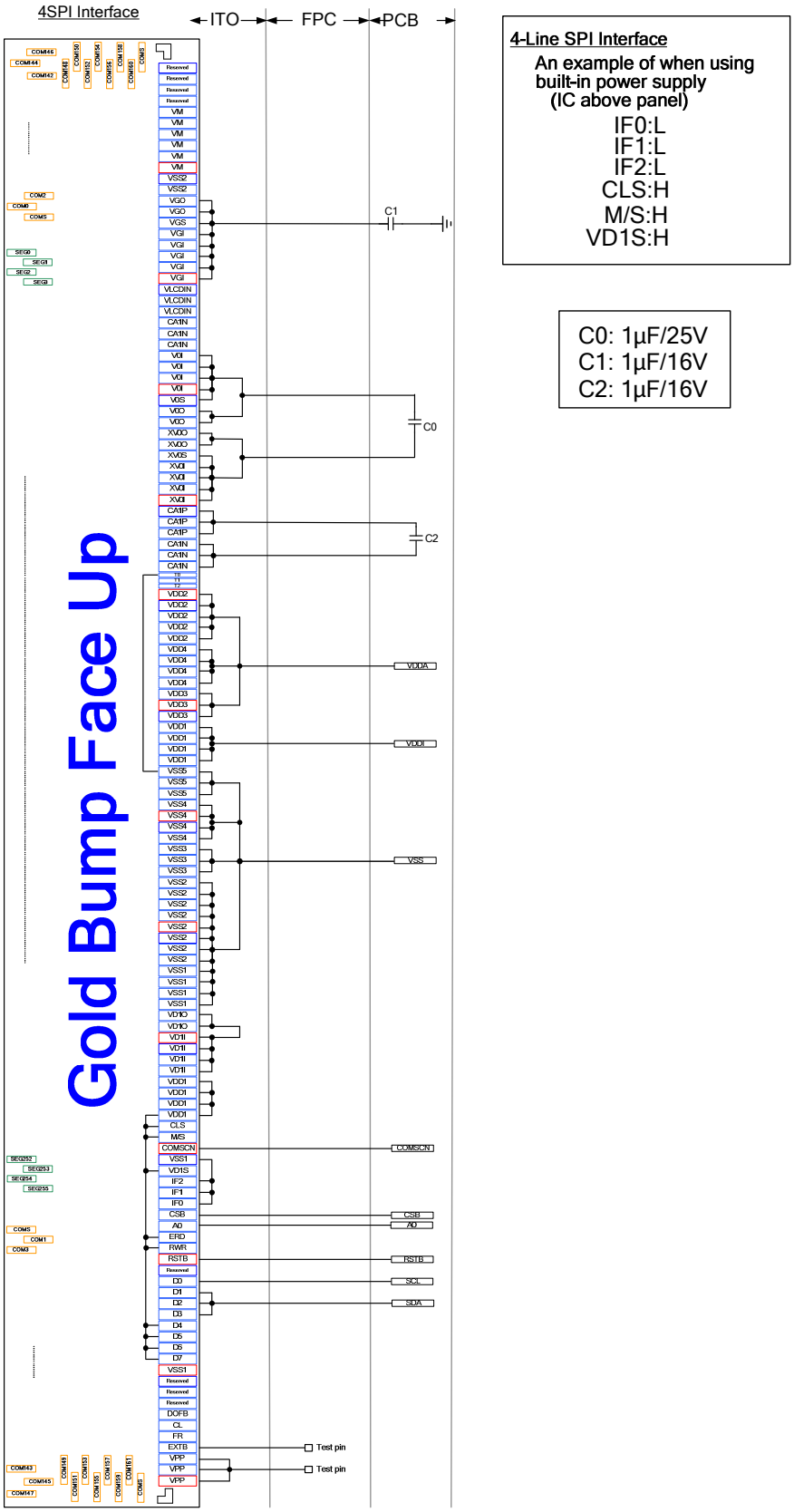

4-Line SPI Interface

An example of when using built-in power supply (IC above panel)

IF0:L
IF1:L
IF2:L
CLS:H
M/S:H
VD1S:H

C0: 1μF/25V
C1: 1μF/16V
C2: 1μF/16V

Sitronix Confidential The information contained herein is the exclusive property of Sitronix and shall not be distributed, reproduced, or disclosed in whole or in part without prior written permission of Sitronix.

15.1.4 3-Line SPI Interface

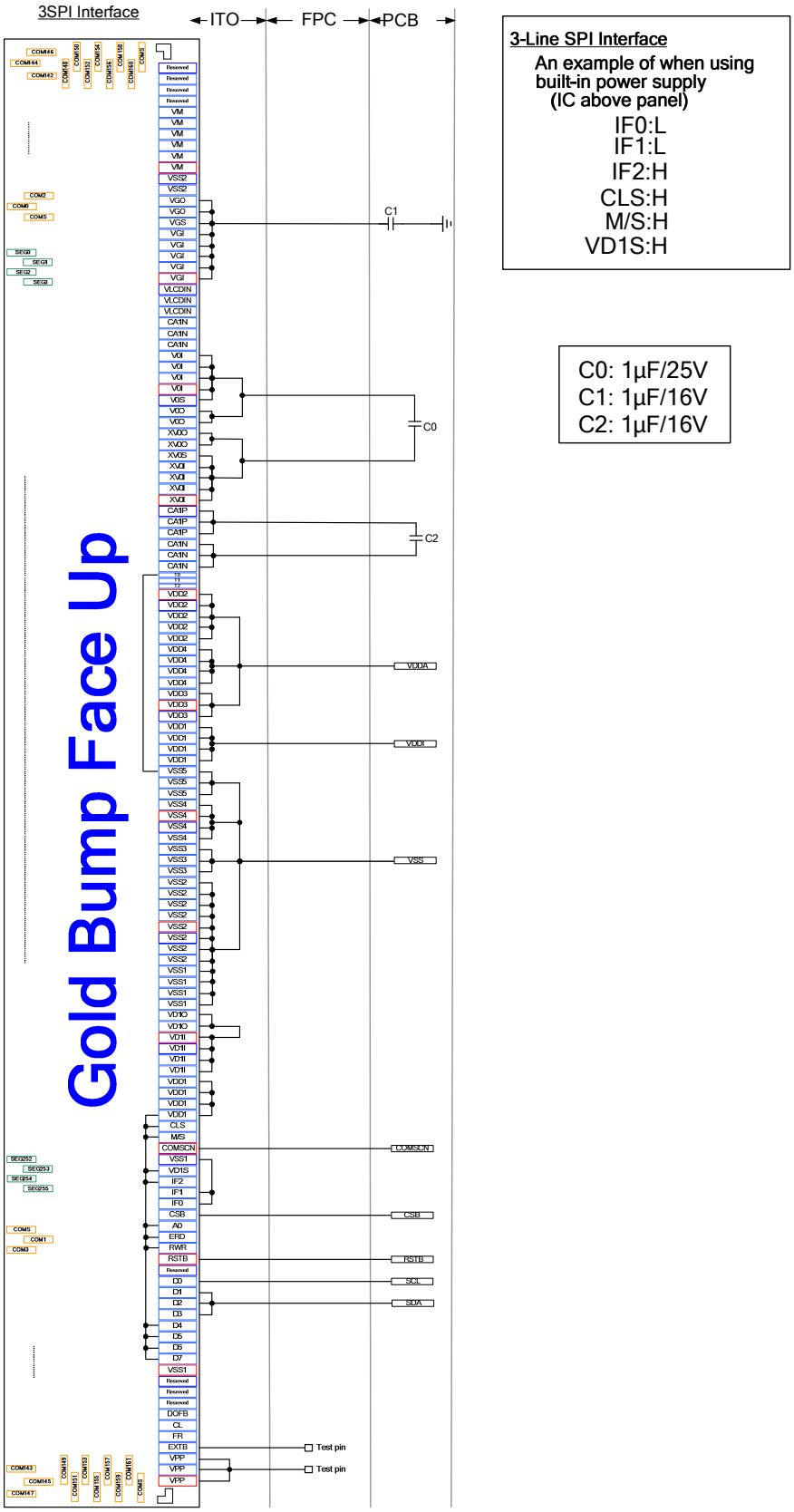

3-Line SPI Interface

An example of when using built-in power supply (IC above panel)

IF0:L
IF1:L
IF2:H
CLS:H
M/S:H
VD1S:H

C0: 1μF/25V
C1: 1μF/16V
C2: 1μF/16V

Sitronix Confidential The information contained herein is the exclusive property of Sitronix and shall not be distributed, reproduced, or disclosed in whole or in part without prior written permission of Sitronix.

15.1.5 I²C Interface

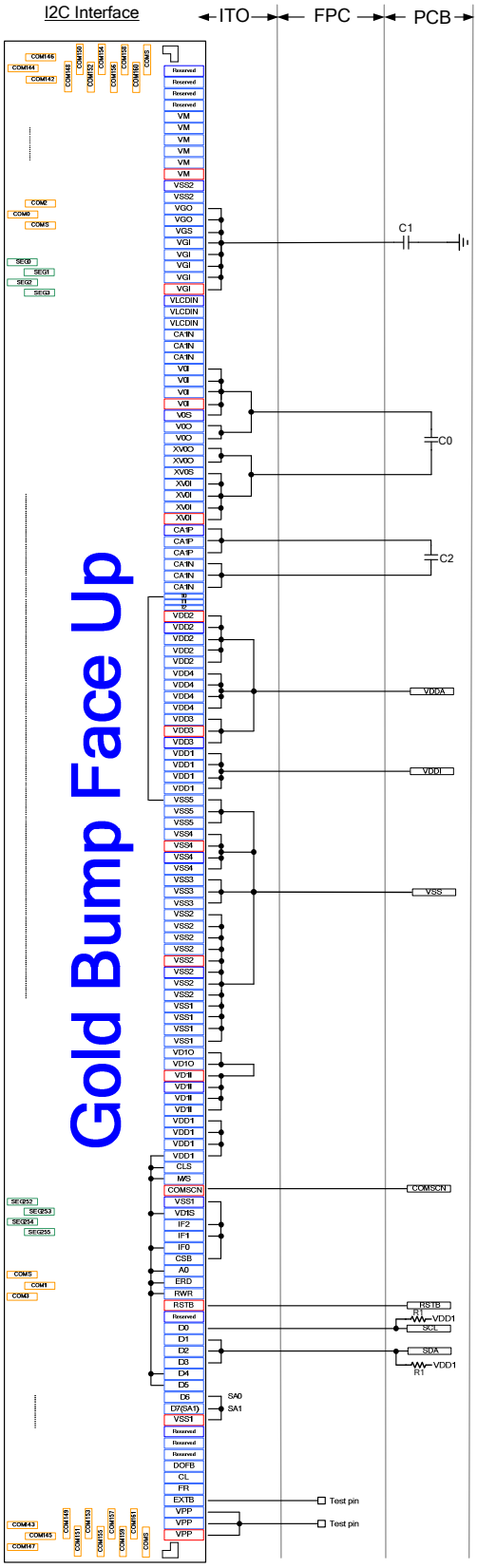

I2C Interface

An example of when using built-in power supply (IC above panel)

IF0:H
IF1:L
IF2:L
CLS:H
M/S:H
VD1S:H

C0: 1μF/25V
C1: 1μF/16V
C2: 1μF/16V
R1: 3~5 KΩ

Sitronix Confidential The information contained herein is the exclusive property of Sitronix and shall not be distributed, reproduced, or disclosed in whole or in part without prior written permission of Sitronix.

16 MASTER/SLAVE MODE

16.1 Connections between LCD Drivers (Reference Example)

The display area of LCD panel can be extended horizontally by using two ST75256 chips. Use a same equipment type.

(1) ST75256 (master) → ST75256 (slave)

Internal OSC

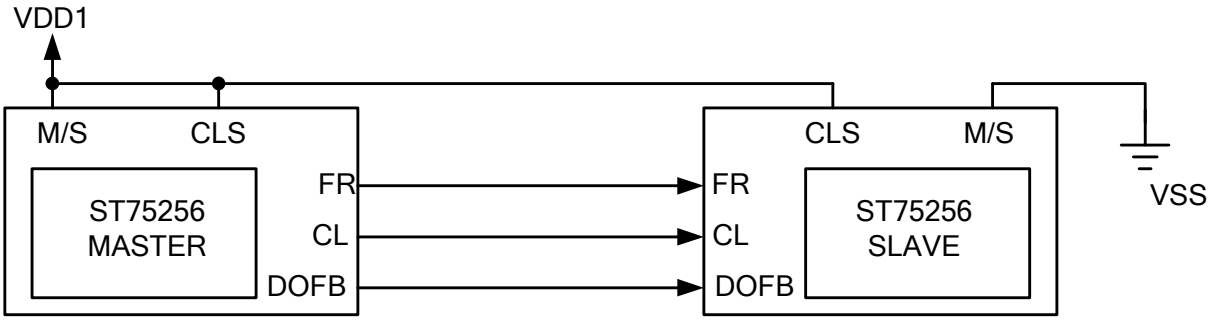

External OSC

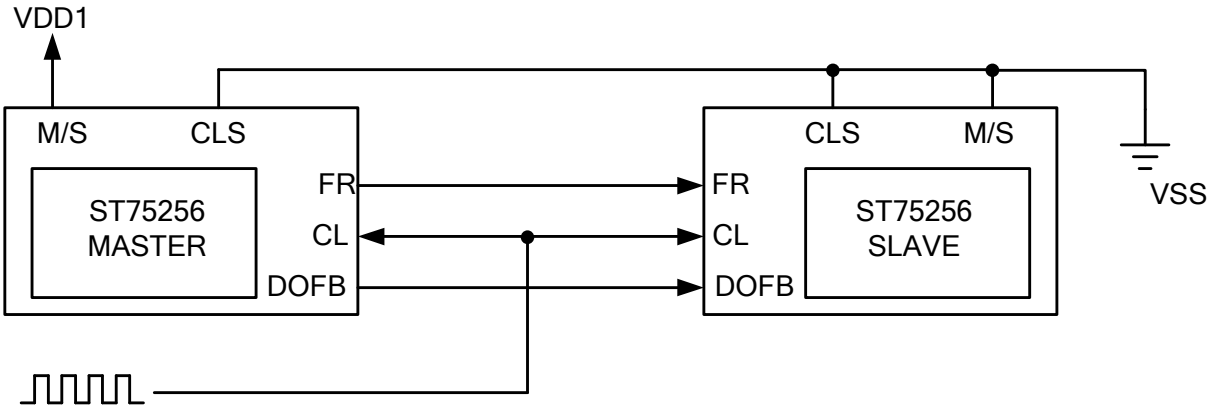

Sitronix Confidential The information contained herein is the exclusive property of Sitronix and shall not be distributed, reproduced, or disclosed in whole or in part without prior written permission of Sitronix.

(2) Application Circuit of Internal Power Supply (8080 interface)

The Master/Slave mode of ST75256 can use one or two CSB pins and there is no difference between the two ways in software setting.

One Chip Select Pin

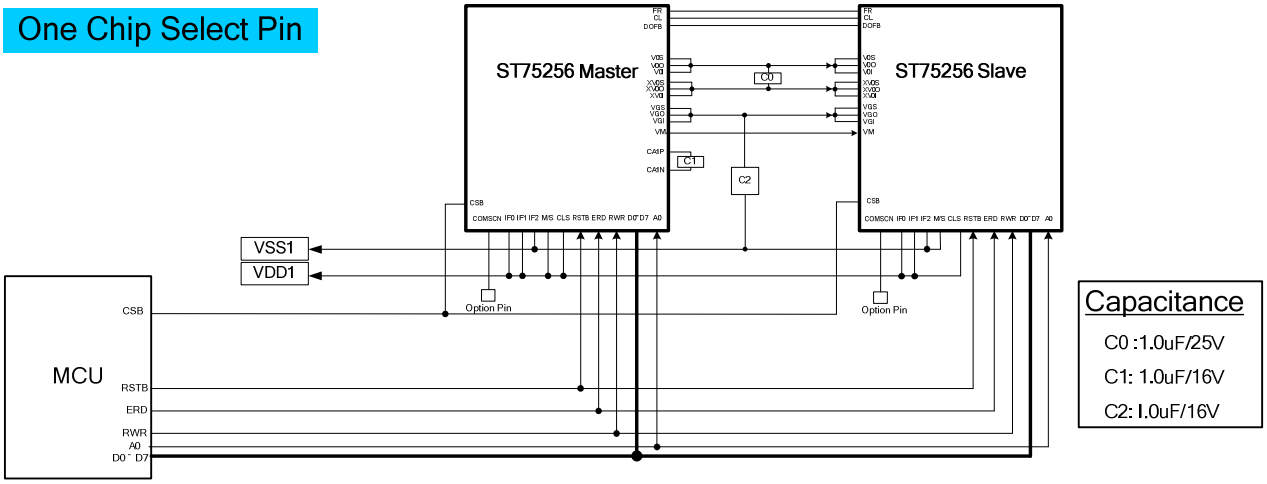

Two Chip Select Pins

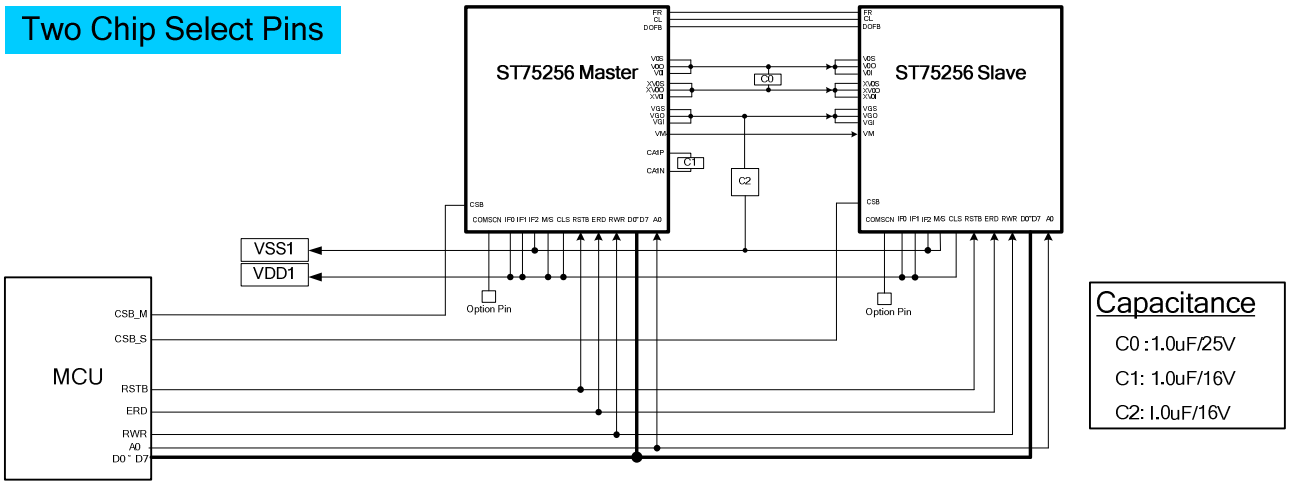

Note:

1. C0: 1uF/25V~2.2uF/25V (Default 1uF/25V)
2. C1: 1uF/16V~2.2uF/16V (Default 1uF/16V)
3. C2: 1uF/16V~2.2uF/16V (Default 1uF/16V)

Sitronix Confidential The information contained herein is the exclusive property of Sitronix and shall not be distributed, reproduced, or disclosed in whole or in part without prior written permission of Sitronix.

(3) Application Circuit of External Power Supply (8080 interface)

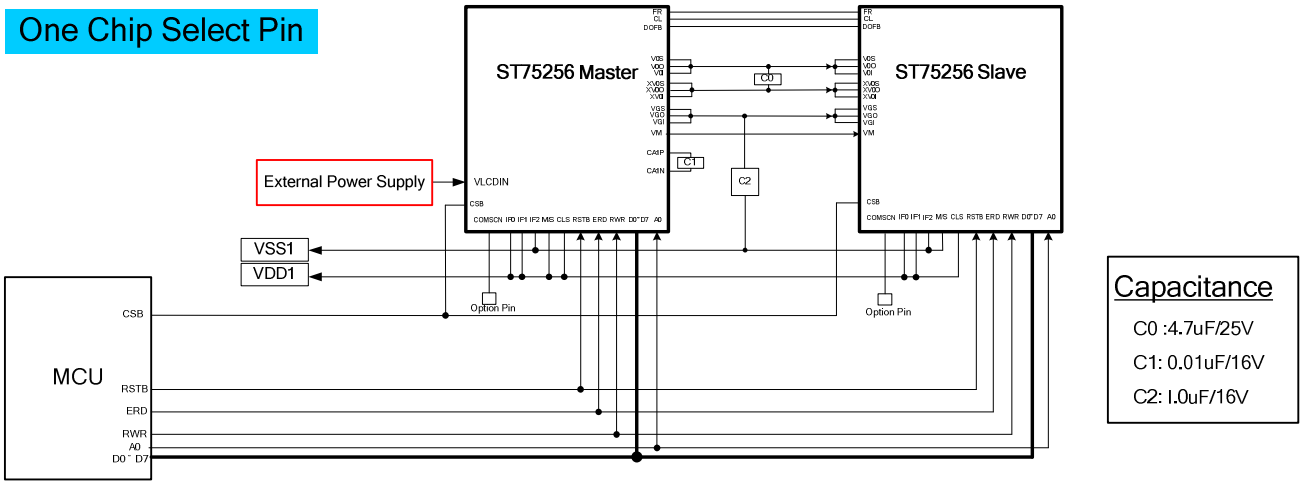

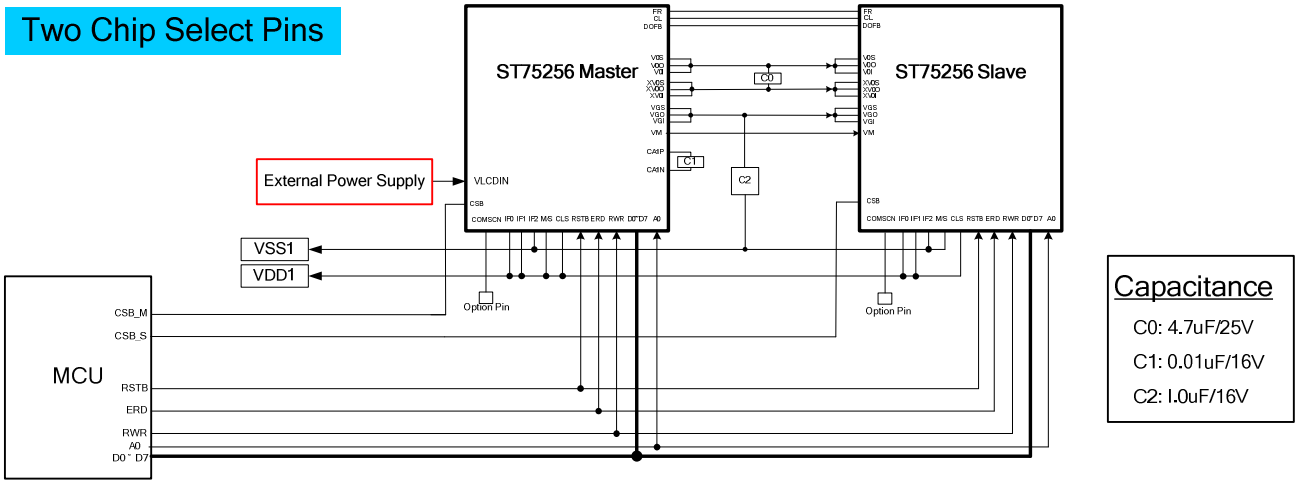

Note:

1. C0: 2.2uF/25V~4.7uF/25V (Default 4.7uF/25V)
2. C1: 0.01uF/16V~0.022uF/16V (Default 0.01uF/16V)
3. C2: 1uF/16V~2.2uF/16V (Default 1uF/16V)

Sitronix Confidential The information contained herein is the exclusive property of Sitronix and shall not be distributed, reproduced, or disclosed in whole or in part without prior written permission of Sitronix.

16.2 Referential Master/Slave Operation Code

The command of slave part must be set before master to ensure Master/Slave mode work normally.

16.2.1 Referential Initial Code

```
Void Initialization_ST75256_Master/Slave (void)
{
        Reset_ms(10);
  ----------------------------------------------/*Slave Part Start*/----------------------------------------------
        Write(Command, 0x30);           // Extension Command 1
        Write(Command, 0x6F);           // Enable Slave
        Write(Command, 0x31);           // Extension Command 2
        Write(Command, 0xD7);           // Disable Auto Read
        Write(Data, 0x9F);
        Write(Command, 0xE0);           // Enable OTP Read
        Write(Data, 0x00);
        Delay_ms(10);
        Write(Command, 0xE3);           // OTP Up-Load
        Delay_ms(20);
        Write(Command, 0xE1);           // OTP Control Out
        Write(Command, 0x30);           // Extension Command 1
        Write(Command, 0x94);           // Sleep Out
        Delay_ms(50);
        Write(Command, 0x20);           // Power Control
        Write(Data, 0x03);              // VB OFF ; VR,VF ON
        Write(Command, 0x81);           // Set Vop = 16V
        Write(Data, 0x36);
        Write(Data, 0x04);

        Write(Command, 0XF0);           // Display Mode
        Write(Data, 0x10);              // Monochrome Mode
        Write(Command, 0xCA);           // Display Control
        Write(Data, 0x00);              // CL Dividing Ratio → Not Divide
        Write(Data, 0xA1);              // Duty=162
        Write(Data, 0x00);              // CL Dividing Ratio → Not Divide
        Write(Command, 0xBC);           // Data Scan Direction
        Write(Data, 0x00);
```


Sitronix Confidential The information contained herein is the exclusive property of Sitronix and shall not be distributed, reproduced, or disclosed in whole or in part without prior written permission of Sitronix.

```
Write(Command, 0x31);          // Extension Command 2
Write(Command, 0x32);          // Analog Circuit Set
Write(Data, 0x00);
Write(Data 0x01);              // Booster Efficiency =Level 1
Write(Data, 0x02);             //Bias=1/12

Write(Command, 0x30);          // Extension Command 1
Write(Command, 0x75);          // Page Address Setting
Write(Data, 0x00);             // COM0 -> COM161
Write(Data, 0x14);
Write(Command, 0x15);          // Column Address Setting
Write(Data, 0x00);             // SEG256 -> SEG512
Write(Data, 0xFF);
Write(Command, 0xAF);          // Display On
-------------------------------------------------/*Slave Part End*/-------------------------------------------------
-------------------------------------------------/*Master Part Start*/-------------------------------------------------
Write(Command, 0x30);          // Extension Command 1
Write(Command, 0x6E);          // Enable Master
Write(Command, 0x31);          // Extension Command 2
Write(Command, 0xD7);          // Disable Auto Read
Write(Data, 0x9F);
Write(Command, 0xE0);          // Enable OTP Read
Write(Data, 0x00);
Delay_ms(10);
Write(Command, 0xE3);          // OTP Up-Load
Delay_ms(20);
Write(Command, 0xE1);          // OTP Control Out
Write(Command, 0x30);          // Extension Command 1
Write(Command, 0x94);          // Sleep Out
Delay_ms(50);
Write(Command, 0x20);          // Power Control
Write(Data, 0x0B);             // VB ON ; VR,VF ON
Write(Command, 0x81);          // Set Vop = 16V
Write(Data, 0x36);
Write(Data, 0x04);
Write(Command, 0XF0);          // Display Mode
Write(Data, 0x10);             // Monochrome Mode
```


Sitronix Confidential The information contained herein is the exclusive property of Sitronix and shall not be distributed, reproduced, or disclosed in whole or in part without prior written permission of Sitronix.

```
        Write(Command, 0xCA);          // Display Control
        Write(Data, 0x00);             // CL Dividing Ratio → Not Divide
        Write(Data, 0xA1);             // Duty=162
        Write(Data, 0x00);             // CL Dividing Ratio → Not Divide
        Write(Command, 0xBC);          // Data Scan Direction
        Write(Data, 0x00);

        Write(Command, 0x31);          // Extension Command 2
        Write(Command, 0x32);          // Analog Circuit Set
        Write(Data, 0x00);
        Write(Data 0x01);              // Booster Efficiency =Level 1
        Write(Data, 0x02);             //Bias=1/12

        Write(Command, 0x30);          // Extension Command 1
        Write(Command, 0x75);          // Page Address Setting
        Write(Data, 0x00);             // COM0 -> COM161
        Write(Data, 0x14);
        Write(Command, 0x15);          // Column Address Setting
        Write(Data, 0x00);             // SEG0 -> SEG255
        Write(Data, 0xFF);

        Write(Command, 0x31);          // Extension Command 2
        Write(Command, 0x40);          // Internal Power Supply
        or
        Write(Command, 0x41);          // External Power Supply

        Write(Command, 0xAF);          //Display On
    ----------------------------------------------/*Master Part End*/----------------------------------------------
}
```


Sitronix Confidential The information contained herein is the exclusive property of Sitronix and shall not be distributed, reproduced, or disclosed in whole or in part without prior written permission of Sitronix.

16.2.2 Referential Power OFF Code

```
Void Power OFF _ST75256_Master/Slave (void)
{
  ------------------------------------------/*External Power Supply Stop*/-------------------------------------
        Write(Command, 0x30);                    // Extension Command 1
        Write(Command, 0x6F);                    // Enable Slave
        Write(Command, 0xAE);                    // Display OFF
        Write(Command, 0x30);                    // Extension Command 1
        Write(Command, 0x6E);                    // Enable Master
        Write(Command, 0xAE);                    // Display OFF

        Write(Command, 0x30);                    // Extension Command 1
        Write(Command, 0x6F);                    // Enable Slave
        Write(Command, 0x95);                    // Sleep-In Mode
        Write(Command, 0x30);                    // Extension Command 1
        Write(Command, 0x6E);                    // Enable Master
        Write(Command, 0x95);                    // Sleep-In Mode
    // ------------------------------------------/*Power OFF Flow End*/-------------------------------------
}
```


Sitronix Confidential The information contained herein is the exclusive property of Sitronix and shall not be distributed, reproduced, or disclosed in whole or in part without prior written permission of Sitronix.

17 COF PACKAGE

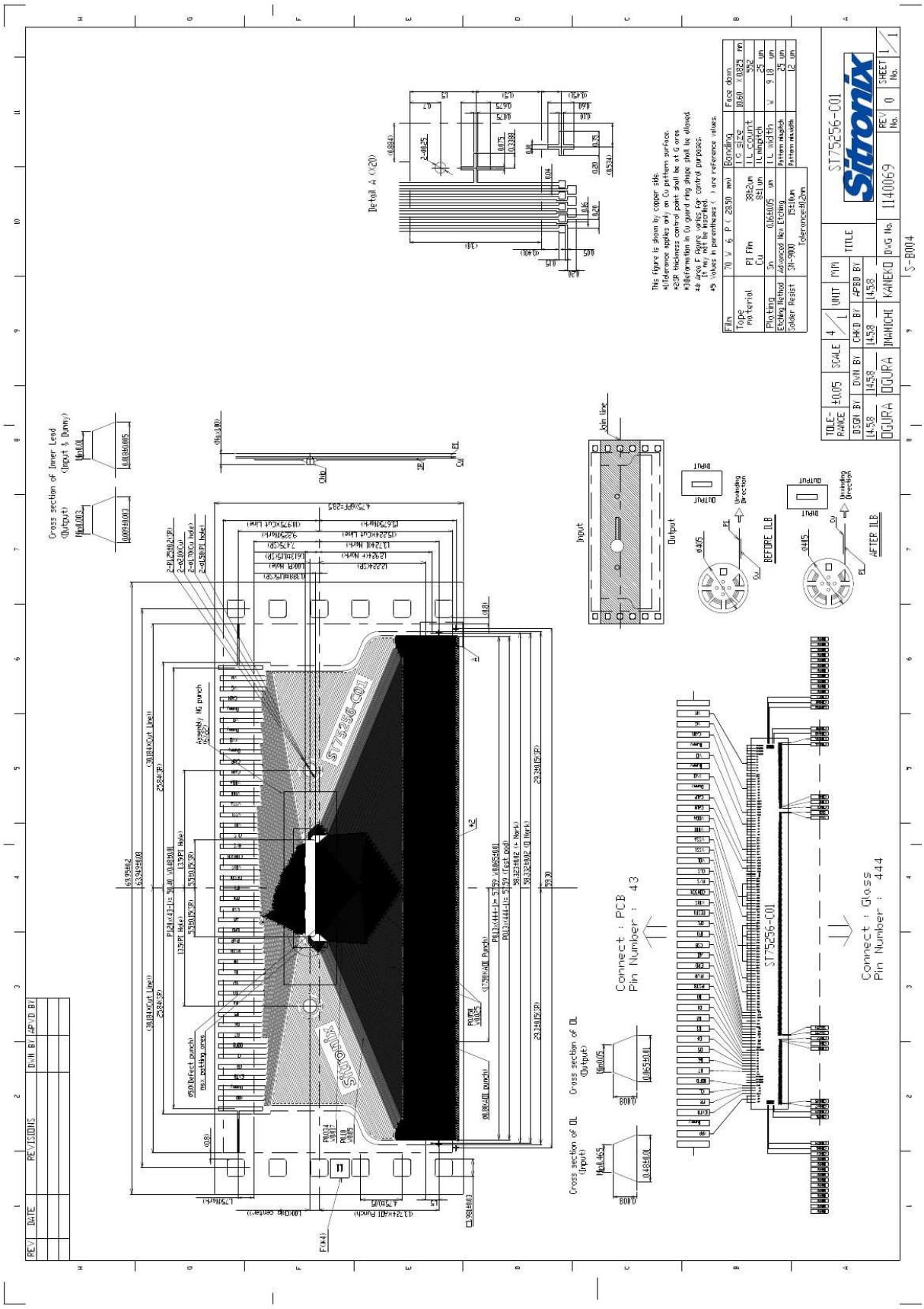

Sitronix Confidential The information contained herein is the exclusive property of Sitronix and shall not be distributed, reproduced, or disclosed in whole or in part without prior written permission of Sitronix.

18 REVISION HISTORY

Version	Date	Description
V1.0	2013/09/04	● Formal version.
V1.1	2013/11/15	● Modify MAXIMUM RATINGS ● Add ITO Layout Reference
V1.2	2013/03/05	● Add figures of driving output pins. ● Add figure of external power supply circuit. ● Add Set ICON Flow
V1.3	2014/04/23	● Modify DDRAM Map to LCD Driver Output ● Modify frame rate default value ● Add application circuit and referential code of Master/Slave.
V1.3a	2014/05/14	● Modify temperature range and add for industrial application ● Add Gray Level Setting ● Modify M/S Application Circuit
V1.4	2014/07/01	● Modify capacitance value of external power supply. ● Remove high power mode. ● Add 3-Line SPI and serial read status ● Add COF Diagram.
V1.5	2014/12/05	● Modify Application Circuit for COMSCN ● Remove ID Function ● Modify All Pixel On/Off Instruction Description
V1.6	201502/13	● Add Partial Duty with COMSCN Description.

Sitronix Confidential The information contained herein is the exclusive property of Sitronix and shall not be distributed, reproduced, or disclosed in whole or in part without prior written permission of Sitronix.