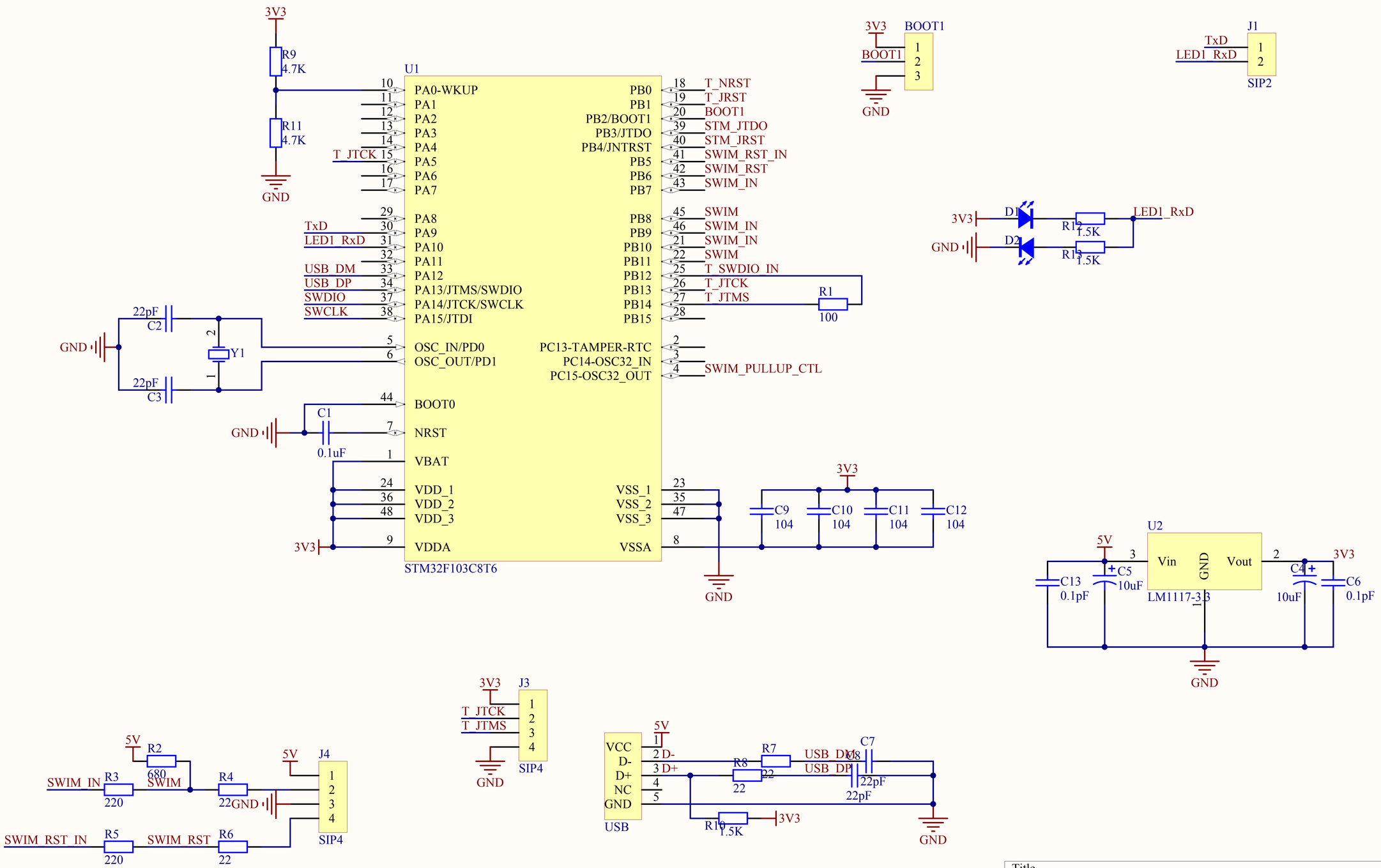

Title		
Size A4	Number	Revision
Date: 2013-8-24		Sheet of
File: C:\Documents and Settings\..\ST-Link.SchDoc		Drawn By: