* Note
Mini-Din-6PR and Mini-Din-8PR are Standard Mini-Din Pins
To be mounted on back side of PCB.
So the footprints on front side are as same as FT-817's Mini-Din Jacks
PTT pin here function as PS_ON control, don't pull low externally.

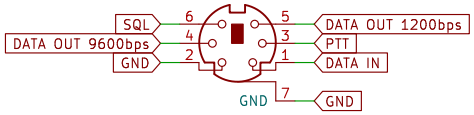

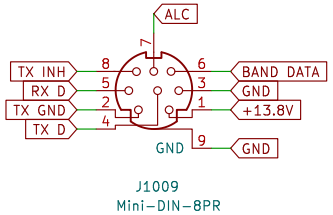

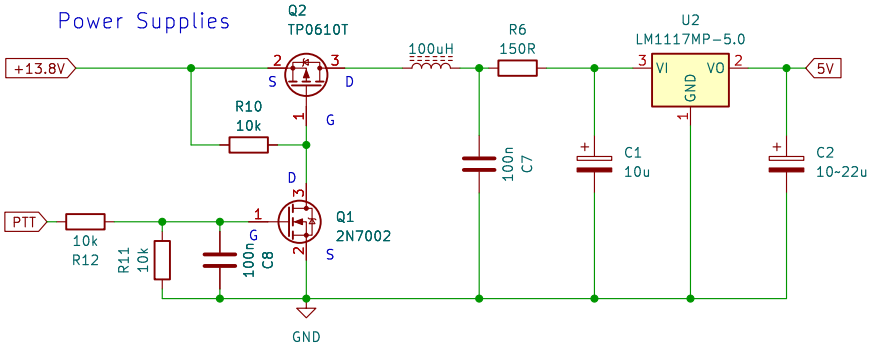

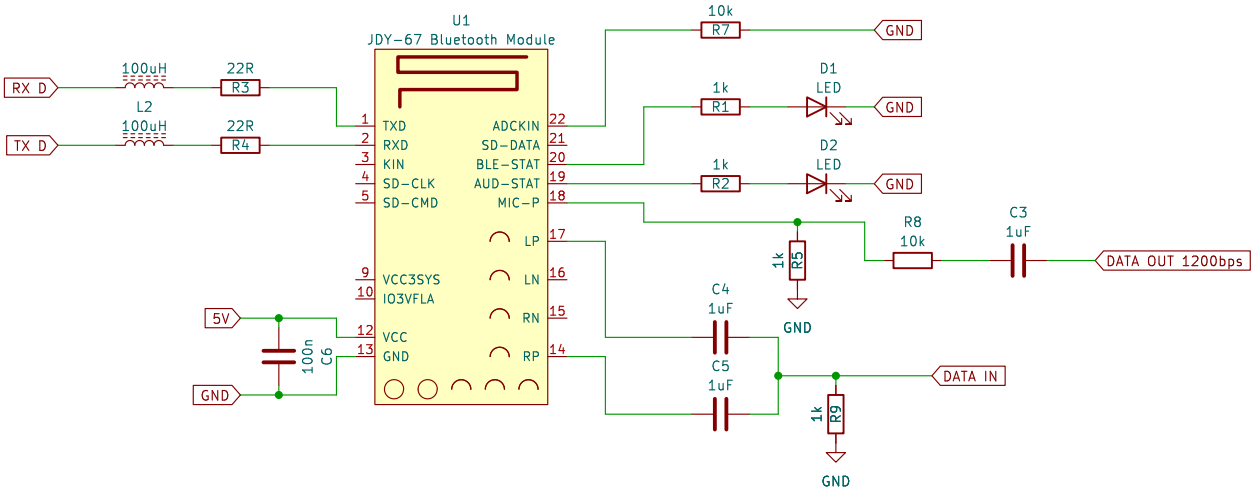

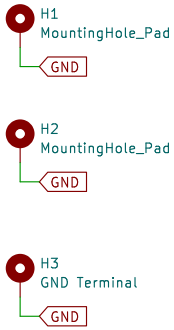

With special thanks to: BG6JJI, BI1EIH
CC-BY-NC-SA 4.0
https://github.com/BG6LH/FT-81x-BT-DIGI-Adaptor

Sheet: /
File: FT817-BT-JDY67.kicad_sch

Title: FT-81x BT DIGI Adaptor

Size: A4	Date: 2023-06-09	**Rev: 20230609**
KiCad E.D.A. kicad 7.0.1-0		Id: 1/1